SERVICE MANUAL

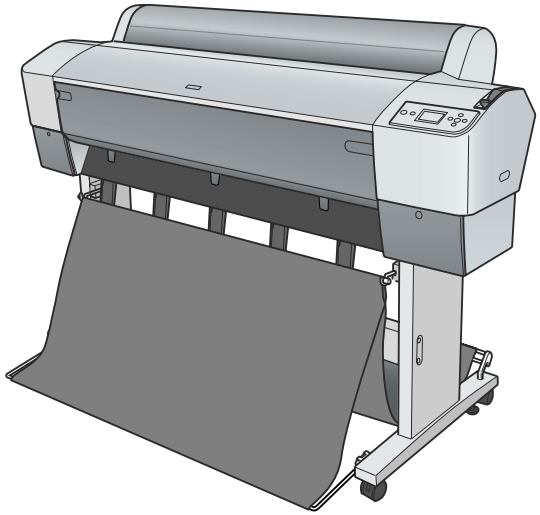

Large Format Color Inkjet Printer

EPSON Stylus Pro 7400/7800/9400/9800

EPSON
EXCEED YOUR VISION

SEIJ05002

Notice:

- All rights reserved. No part of this manual may be reproduced, stored in a retrieval system, or transmitted in any form or by any means, electronic, mechanical, photocopying, recording, or otherwise, without the prior written permission of SEIKO EPSON CORPORATION.

- The contents of this manual are subject to change without notice.
- All effort have been made to ensure the accuracy of the contents of this manual. However, should any errors be detected, SEIKO EPSON would greatly appreciate being informed of them.
- The above not withstanding SEIKO EPSON CORPORATION can assume no responsibility for any errors in this manual or the consequences thereof.

EPSON is a registered trademark of SEIKO EPSON CORPORATION.

General Notice: Other product names used herein are for identification purpose only and may be trademarks or registered trademarks of their respective owners. EPSON disclaims any and all rights in those marks.

Copyright © **2005** **SEIKO EPSON CORPORATION.**
I&I CS/Quality Management & PL Department

PRECAUTIONS

Precautionary notations throughout the text are categorized relative to 1) Personal injury and 2) Damage to equipment.

DANGER Signals a precaution which, if ignored, could result in serious or fatal personal injury. Great caution should be exercised in performing procedures preceded by DANGER Headings.

WARNING Signals a precaution which, if ignored, could result in damage to equipment.

The precautionary measures itemized below should always be observed when performing repair/maintenance procedures.

DANGER

1. ALWAYS DISCONNECT THE PRODUCT FROM THE POWER SOURCE AND PERIPHERAL DEVICES PERFORMING ANY MAINTENANCE OR REPAIR PROCEDURES.
2. NO WORK SHOULD BE PERFORMED ON THE UNIT BY PERSONS UNFAMILIAR WITH BASIC SAFETY MEASURES AS DICTATED FOR ALL ELECTRONICS TECHNICIANS IN THEIR LINE OF WORK.
3. WHEN PERFORMING TESTING AS DICTATED WITHIN THIS MANUAL, DO NOT CONNECT THE UNIT TO A POWER SOURCE UNTIL INSTRUCTED TO DO SO. WHEN THE POWER SUPPLY CABLE MUST BE CONNECTED, USE EXTREME CAUTION IN WORKING ON POWER SUPPLY AND OTHER ELECTRONIC COMPONENTS.

WARNING

1. REPAIRS ON EPSON PRODUCT SHOULD BE PERFORMED ONLY BY AN EPSON CERTIFIED REPAIR TECHNICIAN.
2. MAKE CERTAIN THAT THE SOURCE VOLTAGES IS THE SAME AS THE RATED VOLTAGE, LISTED ON THE SERIAL NUMBER/RATING PLATE. IF THE EPSON PRODUCT HAS A PRIMARY AC RATING DIFFERENT FROM AVAILABLE POWER SOURCE, DO NOT CONNECT IT TO THE POWER SOURCE.
3. ALWAYS VERIFY THAT THE EPSON PRODUCT HAS BEEN DISCONNECTED FROM THE POWER SOURCE BEFORE REMOVING OR REPLACING PRINTED CIRCUIT BOARDS AND/OR INDIVIDUAL CHIPS.
4. IN ORDER TO PROTECT SENSITIVE MICROPROCESSORS AND CIRCUITRY, USE STATIC DISCHARGE EQUIPMENT, SUCH AS ANTI-STATIC WRIST STRAPS, WHEN ACCESSING INTERNAL COMPONENTS.
5. REPLACE MALFUNCTIONING COMPONENTS ONLY WITH THOSE COMPONENTS BY THE MANUFACTURE; INTRODUCTION OF SECOND-SOURCE ICs OR OTHER NON-APPROVED COMPONENTS MAY DAMAGE THE PRODUCT AND VOID ANY APPLICABLE EPSON WARRANTY.
6. WHEN AIR DUSTER IS USED ON THE REPAIR AND THE MAINTENANCE WORK, THE USE OF THE AIR DUSTER PRODUCTS CONTAINING THE INFLAMMABLE GAS IS PROHIBITED.

About This Manual

This manual describes basic functions, theory of electrical and mechanical operations, maintenance and repair procedures of the printer. The instructions and procedures included herein are intended for the experienced repair technicians, and attention should be given to the precautions on the preceding page.

Manual Configuration

This manual consists of six chapters and Appendix.

CHAPTER 1.PRODUCT DESCRIPTIONS
Provides a general overview and specifications of the product.

CHAPTER 2.OPERATING PRINCIPLES
Describes the theory of electrical and mechanical operations of the product.

CHAPTER 3.TROUBLESHOOTING
Describes the step-by-step procedures for the troubleshooting.

CHAPTER 4.DISASSEMBLY / ASSEMBLY
Describes the step-by-step procedures for disassembling and assembling the product.

CHAPTER 5.ADJUSTMENT
Provides Epson-approved methods for adjustment.

CHAPTER 6.MAINTENANCE
Provides preventive maintenance procedures and the lists of Epson-approved lubricants and adhesives required for servicing the product.

APPENDIX Provides the following additional information for reference:

- Connector pin assignments
- Electric circuit boards components layout
- Electrical circuit boards schematics
- Exploded diagram & Parts List

Symbols Used in this Manual

Various symbols are used throughout this manual either to provide additional information on a specific topic or to warn of possible danger present during a procedure or an action. Be aware of all symbols when they are used, and always read NOTE, CAUTION, or WARNING messages.

Indicates an operating or maintenance procedure, practice or condition that is necessary to keep the product's quality.

Indicates an operating or maintenance procedure, practice, or condition that, if not strictly observed, could result in damage to, or destruction of, equipment.

May indicate an operating or maintenance procedure, practice or condition that is necessary to accomplish a task efficiently. It may also provide additional information that is related to a specific subject, or comment on the results achieved through a previous action.

Indicates an operating or maintenance procedure, practice or condition that, if not strictly observed, could result in injury or loss of life.

Revision Status

Revision	Date of Issue	Description
0		Draft Version
A	July 29, 2005	First release
B	September 2, 2005	Revised Contents [All chapters] • "Weight" has been changed to "mass". [Chapter 1] • "Service Personnel Mode" has been changed to "SERVICEMAN MODE". • Descriptions have been added in 1.4.4.34 Power Cleaning *(Page 94)*. • "CAUTION" in Edge Sensor Level Measurement *(Page 112)* has been deleted. [Chapter 2] • Made changes in 2.2.4 Cleaning Mechanism *(Page 163)*. • 2.5 Colorimetric Calibration (Color ID) Overview *(Page 169)* has been added. [Chapter 4] • "ADJUSTMENT REQUIRED" has been added in 4.2.4.2 P/S BOARD ASSY. *(Page 234)*. • "ADJUSTMENT REQUIRED" has been added in 4.2.4.4 BOARD ASSY., SUB *(Page 236)*. • Made changes and added "REASSEMBLY" in 4.2.5.2 CR MOTOR ASSY. *(Page 243)*. • "CAUTION" has been added in 4.2.7.4 PUMP CAP ASSY. *(Page 284)*.

B	September 2, 2005	[Chapter 5] • Descriptions have been added in Table 5-1. Parts and Units that Require Adjustments *(Page 293)*. • Descriptions have been added in Table 5-2. Required Adjustments in the Order of Execution *(Page 294)*. • Descriptions have been added in Basic Adjustment *(Page 297)*. • Made changes in Table 5-3. Tools for Adjustments *(Page 299)*. • Made changes in "System Requirements" in 5.1.7 Adjustment Program Basic Operations *(Page 300)*. • Made changes in 5.2.2 Cutter Position/Height Adjustment *(Page 302)*. • Made changes in 5.2.3 Paper Thickness Sensor Position Adjustment *(Page 304)*. • "Shield Cap" has been changed to "Seal Cap" in 5.2.8 Air Leak Check *(Page 310)*. • Made changes in 5.3.4 T&B&S (Roll Paper) *(Page 316)*. • Made changes in 5.3.5 T&B&S + 980mm Band Feed *(Page 318)*. • Made changes in 5.3.7 Nozzle Bi-D Adjustment *(Page 321)*. • Made changes in 5.3.8 Print Head Slant Adjustment (PF) *(Page 322)*. • Made changes in 5.3.9 Print Head Slant Adjustment (CR) *(Page 325)*. • Made changes in 5.3.10 Ink Mark Sensor Level Adjustment *(Page 328)*. • Made changes in 5.3.11 Auto Uni-D Adjustment *(Page 329)*. • Made changes in 5.3.12 Auto Bi-D Adjustment (P.G. 0.8/1.6) *(Page 330)*. • Made changes in 5.3.13 Ink Mark Sensor Adjustment for Auto Nozzle Check *(Page 331)*. • Made changes in 5.3.14 Skew Check *(Page 333)*. • Made changes in 5.3.15 Platen Position Adjustment *(Page 334)*. • Made changes in 5.3.16 980mm Band Feed Adjustment *(Page 336)*. • 5.3.22 Colorimetric Calibration (Color ID) *(Page 341)* have been added. • Made changes in 5.4.1 Auto Bi-D Adjustment *(Page 357)*. • Made changes in 5.4.2 Manual Bi-D Adjustment *(Page 358)*. • Made changes in 5.5.1 Check Nozzle *(Page 362)*. • Made changes in 5.5.2 Check Alignment *(Page 363)*. • Made changes in 5.5.3 Print Adjustment Check Pattern *(Page 364)*. • Made changes in 5.5.4 Check Cutting *(Page 365)*. • 5.8 Model Setting (when replacing the Main Board) *(Page 372)* have been added.

Contents

Chapter 1 Product Description

1.1 Product Description 11
1.1.1 Features 11
1.1.2 Difference between 8 color and 4 color machines 13
1.2 Basic Specifications 14
1.2.1 Print Specifications 14
1.2.2 Character Specifications 15
1.2.3 Operability Specifications 15
1.2.4 Paper Specifications 16
1.2.5 Mechanism Specifications 23
1.2.6 Electrical Related Information 27
1.2.7 Reliability 27
1.2.8 Environmental Conditions 29
1.2.9 Overall Dimensions 31
1.2.10 Accessories/Options/Consumables 33
1.3 External View and Parts Names 35
1.4 Control Panel 36
1.4.1 Buttons and Functions 36
1.4.2 Panel Display 39
1.4.3 Job Information 48
1.4.4 Panel Setting 50
1.4.5 Maintenance Mode 99
1.4.6 SERVICEMAN MODE 105
1.4.7 MIB Function 136
1.4.8 Function to Prevent Irregular Printing 136
1.4.9 Initialization 137
1.4.10 Default Setup Values 137
1.5 Controller 138
1.6 Interface 139
1.6.1 USB interface 139
1.6.2 IEEE1394 Interface 140
1.6.3 Optional Interface 141
1.6.4 Received Buffer Full Operation 143
1.6.5 Interface Selection 143
1.7 Optional Units and Consumables 144
1.7.1 Ink Cartridge 144
1.7.2 Cleaning Cartridge 145
1.7.3 Conversion Cartridge 145
1.7.4 Maintenance Tank 146

Chapter 2 Operating Principles

2.1 Overview 148
2.2 Print Mechanism Components 149
2.2.1 Print Mechanism (Print Head) 150
2.2.2 Carriage (CR) Mechanism 151
2.2.3 Paper Feed Assembly 160
2.2.4 Cleaning Mechanism 163
2.2.5 Ink Supply Mechanism 165
2.2.6 Others 166
2.3 Outline of Power Supply Circuit Board 167
2.4 Outline of Power Supply Circuit Board 168
2.5 Colorimetric Calibration (Color ID) Overview 169

Chapter 3 Troubleshooting

3.1 Overview 171
3.1.1 Preliminary Check 171
3.1.2 Troubleshooting Procedure 171
3.2 Troubleshooting based on Panel Messages 172
3.2.1 List of Panel Messages 172
3.2.2 Remedies for Warning Messages 178
3.2.3 Remedies for Error Messages 181
3.2.4 Remedies for Service Call Errors 188
3.3 Troubleshooting based on Printed Result 203

Chapter 4 Disassembly & Assembly

4.1 Overview 208
4.1.1 Precautions 208
4.1.2 Recommended Tools 210
4.1.3 Recommended Screws 210
4.2 Disassembly Procedure 212
4.2.1 Basic Operations 214
4.2.2 Consumables 216
4.2.3 Removing the Panel Unit and Housing 220
4.2.4 Removing the Circuit Boards 232
4.2.5 Removing the Carriage Mechanism 240
4.2.6 Removing the Paper Feed Mechanism 252
4.2.7 Removing the Ink System Mechanism 267

Chapter 5 Adjustment

5.1 Overview 293
5.1.1 Precautions 293
5.1.2 Adjustment Workflow 293
5.1.3 Parts and Units that Require Adjustments 293
5.1.4 Required Adjustments by Part or Unit 294
5.1.5 Description of Adjustments 296
5.1.6 Tools for Adjustments 299
5.1.7 Adjustment Program Basic Operations 300
5.2 Mechanical Adjustment 301
5.2.1 Ink Mark Sensor Height Adjustment 301
5.2.2 Cutter Position/Height Adjustment 302
5.2.3 Paper Thickness Sensor Position Adjustment 304
5.2.4 CR Timing Belt Tension Adjustment 306
5.2.5 PF Timing Belt Tension Adjustment 307
5.2.6 CR Encoder Sensor Adjustment 308
5.2.7 PF Encoder Sensor Adjustment 309
5.2.8 Air Leak Check 310
5.3 Basic Adjustment 313
5.3.1 RTC&USB ID&IEEE1394 ID 313
5.3.2 Head Rank ID 314
5.3.3 Input Serial Number 315
5.3.4 T&B&S (Roll Paper) 316
5.3.5 T&B&S + 980mm Band Feed 318
5.3.6 Cutter Pressure Adjustment 320
5.3.7 Nozzle Bi-D Adjustment 321
5.3.8 Print Head Slant Adjustment (PF) 322
5.3.9 Print Head Slant Adjustment (CR) 325
5.3.10 Ink Mark Sensor Level Adjustment 328
5.3.11 Auto Uni-D Adjustment 329
5.3.12 Auto Bi-D Adjustment (P.G. 0.8/1.6) 330
5.3.13 Ink Mark Sensor Adjustment for Auto Nozzle Check 331
5.3.14 Skew Check 333
5.3.15 Platen Position Adjustment 334
5.3.16 980mm Band Feed Adjustment 336
5.3.17 Initial Ink Charge Flag ON/OFF 337
5.3.18 NVRAM Back Up and Write 338
5.3.19 Initial Ink Charge 339
5.3.20 Cleaning 339
5.3.21 Rear Sensor Adjustment 340
5.3.22 Colorimetric Calibration (Color ID) 341
5.4 Advanced Adjustment 357
5.4.1 Auto Bi-D Adjustment 357
5.4.2 Manual Bi-D Adjustment 358
5.4.3 Destination Setting 360
5.4.4 PF Micro Feed Adjustment (Bi-D) 361
5.5 Check Results 362
5.5.1 Check Nozzle 362
5.5.2 Check Alignment 363
5.5.3 Print Adjustment Check Pattern 364
5.5.4 Check Cutting 365
5.5.5 Print Image 366
5.6 Reset Counters 367
5.6.1 Reset PG Switching Counter 367
5.6.2 Reset PF Motor Counter 367
5.6.3 Reset When CR Unit Change 368
5.6.4 Reset When Cleaning Unit Change 368
5.6.5 Reset When PrintHead Change 369
5.6.6 Reset When Cutter Solenoid Change 369
5.6.7 Reset Pump Counter 370
5.6.8 Reset Ink Information 370
5.7 Installing Firmware 371
5.8 Model Setting (when replacing the Main Board) 372

Chapter 6 Maintenance

6.1 Overview 374
6.1.1 Product Life Information 375
6.1.2 Required Maintenance Items 376
6.2 Lubrication 377

Chapter 7 Appendix

7.1 Connectors 381
7.2 Circuit Diagrams 384
7.3 Exploded Diagrams 393
7.4 ASP List (Parts List) 422
7.4.1 ASP List for Stylus Pro 7800 422
7.4.2 ASP List for Stylus Pro 9800 425

CHAPTER

1

PRODUCT DESCRIPTION

1.1 Product Description

1.1.1 Features

- Large sheet
  - Maximum paper width
    - Stylus Pro 7400/7800:
      610 mm (Approx. 24 inches), A1+ response
    - Stylus Pro 9400/9800:
      1118 mm (Approx. 44 inches), B0 + response
- Model configuration and ink set
  The Stylus Pro 7400/9400 are 4 color machines and the Stylus Pro 7800/9800 are 8 color machines.

Table 1-1. Model Configuration and Ink Set

Slot		Ink cartridge	
		8 color machine (Stylus Pro 7800, 9800)	4 color machine (Stylus Pro 7400, 9400)*2
Left Slot	1st column	Light Light Black	Matte Black *3
	2nd column	Light Magenta	
	3rd column	Light Cyan	Magenta
	4th column	Light Black	
Right Slot	5th column	Photo Black / Matte Black *1	Cyan
	6th column	Cyan	
	7th column	Magenta	Yellow
	8th column	Yellow	

Note : "Column" in the table refer to the 1st column from left end on the printer head facing the front of the printer.

Note "*1": The Photo Black is supplied as standard.
Matte Black can be selected as an option.
Photo Black and Matte Black can be changed by the user.

"*2": Two ink cartridges are mounted for each color ink cartridge.

"*3": Only Matte Black can be used for black ink.

- Super-high definition
  - Super-high resolution of 2880 x 1440 dpi
  - Smallest droplet size: 3.5 picoliter
    Variable droplet technology can produce multiple different sizes per print line
- Low running cost
  - Independent ink cartridges for each color with large capacity of 110 ml
  - Optional ink cartridge with larger capacity of 220ml can be used
- Media handling
  - Various types of media can be used
  - Built-in automatic cutting system and a manual media cutter
  - Accurate automatic loading of cut sheet media
  - Borderless printing (full-bleed print on all four sides) with roll paper
  - Up to 1.5 mm thick paper can be used
- Compatibility with other large sheet printers
  Upper compatibility with;
  Stylus Pro 4000, Stylus Pro 4400, Stylus Pro 4800,
  Stylus Pro 7000, Stylus Pro 7500, Stylus Pro 7600,
  Stylus Pro 9000, Stylus Pro 9500, Stylus Pro 9600,
  Stylus Pro 10000, Stylus Pro 10600.
- The latest RIP
  - Genuine: NorthFlight Plus ver. 3
  - Others: Stylus Rip Profeshinal 3

☐ High-speed throughput

Table 1-2. Throughput

Ink type	Paper	Image quality	Dot Size	Resolution (dpi)	Mode			Throughput	
								Stylus Pro 7800 / Stylus Pro 7400 (Time for printing on A1 cut sheet)	Stylus Pro 9800 / Stylus Pro 9400 (Time for printing on B0 cut sheet)
Pigment 8 color	Plain paper	Economy	VSD1	360 x 360	Bi-D	MF	320CPS	2.2 Minutes	5.1 Minutes
		Fast	VSD1	360 x 360	Bi-D	FD	320CPS	4.2 Minutes	10.9 Minutes
		Quality	VSD2	720 x 360	Bi-D	MW	240CPS	5.0 Minutes	13.6 Minutes
		High quality	VSD3	720 x 720	Bi-D	FOL	240CPS	9.9 Minutes	29.0 Minutes
	Matte paper	Fast	VSD1	720 x 360	Bi-D	FOL	320CPS	4.2 Minutes	10.9 Minutes
		Quality	VSD2	720 x 720	Bi-D	FOL	240CPS	9.9 Minutes	29.0 Minutes
		High quality	VSD3	1,440 x 720	Bi-D	FD4 pass	240CPS	14.3 Minutes	42.5 Minutes
		Super fine detail	VSD3	1,440 x 720	Bi-D	FD8 pass	240CPS	25.7 Minutes	78.1 Minutes
	Glossy photo paper, FA paper	Quality	VSD2	720 x 720	Bi-D	FOL	240CPS	9.9 Minutes	29.0 Minutes
		High quality 1440	VSD3	1,440 x 720	Bi-D	FD4 pass	240CPS	14.3 Minutes	42.5 Minutes
		High quality 2880	VSD3_HR	2,880 x 1,440	Bi-D	4 pass	240CPS	26.9 Minutes	81.7 Minutes
Pigment 4 color	Plain paper	Economy	VSD1	360 x 360	Uni-D	band	320CPS	1.8 Minutes	4.3 Minutes
		Fast	VSD1	360 x 360	Bi-D	MW	320CPS	2.7 Minutes	6.6 Minutes
		Quality	VSD2	720 x 360	Bi-D	FOL	240CPS	3.2 Minutes	8.3 Minutes
		High quality	VSD3	720 x 720	Bi-D	FOL	240CPS	6.4 Minutes	18.5 Minutes
	Matte paper	Fast	VSD1	360 x 720	Bi-D	FD	320CPS	3.9 Minutes	10.4 Minutes
		Quality	VSD2	720 x 720	Bi-D	FOL	240CPS	6.4 Minutes	18.5 Minutes
		High quality	VSD3	1,440 x 720	Bi-D	FD4 pass	240CPS	9.4 Minutes	27.7 Minutes
		Super fine detail	VSD3	1,440 x 720	Bi-D	FD8 pass	240CPS	13.1 Minutes	39.0 Minutes
	Glossy photo paper, FA paper	Quality	VSD2	720 x 720	Bi-D	FOL	240CPS	6.4 Minutes	18.5 Minutes
		High quality	VSD3	1,440 x 720	Bi-D	FD4 pass	240CPS	9.4 Minutes	27.7 Minutes
		Super fine detail	VSD3	1,440 x 720	Bi-D	FD8 pass	240CPS	13.1 Minutes	39.0 Minutes

1.1.2 Difference between 8 color and 4 color machines

Item	8 color machine (Stylus Pro 7800/9800)	4 color machine (Stylus Pro 7400/9400)
Ink configuration	LLk, Lm, Lc, Lk, Pk (Mk), C, M, Y	Mk, M, C, Y
Ink Type	☐ PX-P/K3 ink with following improvements: ■ Consistent gray balance ■ Accurate color control ■ Minimized metamerism ■ Extremely fine blends and photographic transitions ■ The maximum density level is raised ■ Glossiness has improved	☐ PX-Pink ■ Rick color reproduction ■ Extremely wide color gamut ■ Lightfastness and ozone-proof has improved

1.2 Basic Specifications

1.2.1 Print Specifications

- Print method: On-demand Ink Jet Method
- Nozzle configuration:

Table 1-3. Nozzle Configuration

Mode	Ink		Number of Nozzles
8 color machine (Stylus Pro 7800, Stylus Pro 9800)	Black	Photo Black / Matte Black *	180
		Light Light Black	180
		Light Black	180
	Color	Cyan	180
		Magenta	180
		Light Cyan	180
		Light Magenta	180
		Yellow	180
4 color machine (Stylus Pro 7400, Stylus Pro 9400)	Black	Matte Black	360 (180 x 2)
	Color	Cyan	360 (180 x 2)
		Magenta	360 (180 x 2)
		Yellow	360 (180 x 2)

Note "*": Photo Black and Matte Black can be changed by the user.

- Nozzle pitch: 0.141mm (1/180 inch) for each color

- Ink cartridge configuration:
  The ink cartridge configuration differs between the 4 and 8 color machines as follows.

Table 1-4. Ink Cartridge Configuration

Mode	1st column	2nd column	3rd column	4th column	5th column	6th column	7th column	8th column
8 Color mode (Stylus Pro 7800, Stylus Pro 9800)	LLk	Lm	Lc	Lk	Pk / Mk*	C	M	Y
4 Color mode (Stylus Pro 7400, Stylus Pro 9400)	MK	MK	M	M	C	C	Y	Y

Note : "Column" in the table refer to the 1st column from left end on the printer head facing the front of the printer.

Note "*": Photo Black and Matte Black can be changed by the user.

- Print direction:
  Bidirectional with logic seeking (high speed return and high speed skip only)
- Resolution:
  Maximum 2880 x 1440 dpi
- Control code
  ESC/P Raster Photographic Driver
- Paper feed method:
  Friction feed (roll and cut sheet)
- Line spacing:
  1/6 inch (default). Programmable in 1/1440-inch increments
- Paper path:
  Roll paper or cut sheets with manual insertion
- Paper feed speed:
  245 ± 10 milliseconds per 1/4-inch line

- Printing speed
  - Text print mode
    - Maximum 320 CPS (characters per second) (1 CPS = 2.54 mm/s)
    - Maximum 10 CPI (characters per inch)
  - Graphic print mode

Table 1-5. Graphics Modes (Stylus Pro 7400/7800)

Horizontal Definition (dpi)	Printing range	Printable number of dots	Printing speed
360	617.6mm (24.31inch)	8,753	320cps
720	617.6mm (24.31inch)	17,506	240cps
1440	617.6mm (24.31inch)	35,013	210cps
2880	617.6mm (24.31inch)	70,027	210cps

Note : The printing ranges shown in the table include max. 8mm (bleeding width for printing off both left and right edges)

Table 1-6. Graphics Modes (Stylus Pro 9400/9800)

Horizontal Definition (dpi)	Printing range	Printable number of dots	Printing speed
360	1125.6mm (44.31inch)	15,953	320cps
720	1125.6mm (44.31inch)	31,906	240cps
1440	1125.6mm (44.31inch)	63,813	210cps
2880	1125.6mm (44.31inch)	127,627	210cps

Note : The printing ranges shown in the table include max. 8mm (bleeding width for printing off both left and right edges)

1.2.2 Character Specifications

- Character code:
  - Alphanumeric characters extension graphics (PC437)
  - Multilingual (PC850)
- Typeface:
  - EPSON original typeface
  - Alphanumeric characters Courier

1.2.3 Operability Specifications

- Acoustic noise level
  - Sound pressure level:
    Less than 50dB (A) (TBD) (4 direction average, conforms to ISO9296)
    (* Without grating sounds such as impact sounds or abnormal sounds)
  - Sound power level:
    TBD
- Initialize time when power supply is switched ON:
  Within 60 seconds (Excluding TLC etc Wait Time)
- Initial charging time:
  Less than 9 minutes 30 seconds
  (* Time from lowering the lever to completion of initial charging)

1.2.4 Paper Specifications

1.2.4.1 Roll Paper

The allowable roll paper dimensions are shown in the table below. See "1.2.4.4 Allowable EPSON and Other Media" *(p.18)* for details on the allowable paper specifications.

☐ Paper size *:

Table 1-7. Roll Paper Sizes

Core	Model	Paper size
2-inch core	Stylus Pro 7400/7800	203mm~610mm (W) x ~45m (H)
	Stylus Pro 9400/9800	203mm~1,118mm (W) x ~45m (H)
3-inch core	Stylus Pro 7400/7800	203mm~610mm (W) x ~220m (H)
	Stylus Pro 9400/9800	203mm~1,118mm (W) x ~220m (H)

Note : The core sizes are their interior diameters.

Note "*": Auto nozzle check cannot be carried out on paper with a width less than 210mm.

☐ Roll paper size:

- 2 Inch core: Outer diameter within 103mm/ 1 roll set possible
- 3 Inch core: Outer diameter within 150mm/ 1 roll set possible

☐ Paper thickness:

- Special paper: 3.15 to 19.67 mil (0.08 to 0.50 mm)
- Plain paper: 3.15 to 4.33 mil (0.08 to 0.11 mm)

☐ Paper basis mass:

- Special paper: 64 to 260 gf/m^2
- Plain paper: 64 to 90 gf/m^2

NOTE
- *Do not use curled, folded, or deckle-edge paper.*
- *Be sure to use the Type 3 adapter included in the package when using the 3-inch core roll paper.*
- *For best result, use paper under the following conditions:*
  Temperature: 59 to 77 ºF (15 to 25 ºC)
  Humidity: 40 to 60 % RH

1.2.4.2 Cut Sheet

The allowable cut sheet paper dimensions are shown in the table below. See "1.2.4.4 Allowable EPSON and Other Media" *(p.18)* for details on the allowable paper specifications.

☐ Paper size *:

Table 1-8. Cut Sheet Sizes

Core	Model	Paper size
Paper width	Stylus Pro 7400/7800	203mm~610mm
	Stylus Pro 9400/9800	203mm~1,118mm
Paper length	Stylus Pro 7400/7800	279mm~1,580mm
	Stylus Pro 9400/9800	279mm~1,580mm

Note "*": Auto nozzle check cannot be carried out on paper with a width less than 210mm.

☐ Paper thickness:

- Paper length more than 279 mm up to 728 mm: 3.15 to 59 mil (0.08 to 1.50 mm)
- Paper length exceeding 728 mm up to 1580 mm: 3.15 to 19.67 mil (0.08 to 0.50 mm)
- Plain paper: 3.15 to 4.33 mil (0.08 to 0.11 mm)

☐ Paper basis mass:

- Special paper: 64 to 260 gf/m^2
- Plain paper: 64 to 90 gf/m^2

NOTE
- *Basically, portrait printing only.*
- *Do not use curled, folded, or deckle-edge paper.*
- *For best result, use paper under the following conditions:*
  Temperature: 59 to 77 ºF (15 to 25 ºC)
  Humidity: 40 to 60 % RH

1.2.4.3 Selectable Paper Size

The following paper sizes can be selected in the driver for Roll paper/cut sheet. *1

Table 1-9. Selectable Paper Size

Paper Size	Size (W x H)	Paper Size	Size (W x H)
Letter 8	1/2 x 11 in	B4	257 x 364 mm
US B 11 x 17 in	11 x 17 in	B3	364 x 514 mm
US B 17 x 24 in	17 x 24 in	B2	515mm x 728mm
US C 17 x 22 in	17 x 22 in	**B1**	**728 mm x 1,030 mm**
US D 22 x 34 in	22 x 34 in	**B1 (Landscape)** *2	**728 mm x 1,030 mm**
US E 34 x 44 in	**34 x 44 in**	**B0**	**1,030 mm x 1,456 mm**
A4	210 x 297 mm	**Super B0**	**1,118 mm x 1,580 mm**
A3	297 x 420 mm	30 x 24 in	30 x 24 in
Super A3 / B	329 x 483 mm	3.5 x 4.5 in*3	3.5 x 4.5 in
A2	420 x 59 4mm	8 x 10 in	8 x 10 in
A1	594 x 841 mm	11 x 14 in	11 x 14 in
Super A1	24 x 36 in	16 x 20 in	16 x 20 in
A0	**841 mm x 1,189 mm**	60 x 90 cm	60 x 90 cm
Super A0	**914 mm x 1,292 mm**	40 x 60 cm	40 x 60 cm
B5	182 x 257 mm	30 x 40 cm	30 x 40 cm

Note : The sizes in bold type are for the Stylus Pro 9400/9800.

Note "*1": Basically, load cut sheet on the printer in portrait orientation. And the paper grain direction should run vertically for best result.

"*2": When using media other than paper loading it in landscape orientation, the allowable media thickness is 3.15 to 59 mil (0.08 to 1.5 mm).

"*3": The printer does not support this sized media. Note that the sizes given in the table are printable area sizes, not media sizes.

1.2.4.4 Allowable EPSON and Other Media

Table 1-10. Allowable EPSON and Other Media

Category	Type	Media name	Size	Form	Spindle Specifications	Borderless printing	8 color machine (Stylus Pro 7800/9800)				4 color machine (Stylus Pro 7400/9400)			
							EAI	Europe	Asia	Ink type	EAI	Europe	Asia	Ink type
Photo	RC-Heavy Weight Glossy	Premium Glossy Photo Paper (250)	16”	Roll	3”	○	○	○	○	Pk	---	---	---	---
			24”	↑	↑	○	○	○	○	Pk	---	---	---	---
			36”	↑	↑	○	○	○	○	Pk	---	---	---	---
			44”	↑	↑	○	○	○	○	Pk	---	---	---	---
	RC-Heavy Weight Semigloss	Premium Semigloss Photo Paper (250)	16”	Roll	3”	○	---	○	○	Pk	---	---	---	---
			24”	↑	↑	○	---	○	○	Pk	---	---	---	---
			36”	↑	↑	○	---	○	○	Pk	---	---	---	---
			44”	↑	↑	○	---	○	○	Pk	---	---	---	---
	RC-Heavy Weight Semimatte	Premium Semimatte Photo Paper (250)	16”	Roll	3”	○	○	○	○	Pk	---	---	---	---
			24”	↑	↑	○	○	○	○	Pk	---	---	---	---
			36”	↑	↑	○	○	○	○	Pk	---	---	---	---
			44”	↑	↑	○	○	○	○	Pk	---	---	---	---
			USC (TBD)	Cut Sheet	---	---	○	○	---	Pk	---	---	---	---
	RC-Heavy Weight Luster	Premium Luster Photo Paper (250)	10”	Roll	3”	○	○	---	---	Pk	---	---	---	---
			300mm	↑	↑	○	---	○	○	Pk	---	---	---	---
			16”	↑	↑	○	○	○	○	Pk	---	---	---	---
			20”	↑	↑	---	○	---	---	Pk	---	---	---	---
			24”	↑	↑	○	○	○	○	Pk	---	---	---	---
			36”	↑	↑	○	○	○	○	Pk	---	---	---	---
			44”	↑	↑	○	○	○	○	Pk	---	---	---	---
			USC (TBD)	Cut Sheet	---	---	○	○	---	Pk	---	---	---	---
	RC-Heavy Weight Glossy	Photo Paper Gloss 250	17”	Roll	3”	○	○	○	○	Pk	---	---	---	---
			24”	↑	↑	○	○	○	○	Pk	---	---	---	---
			36”	↑	↑	○	○	○	○	Pk	---	---	---	---
			44”	↑	↑	○	○	○	○	Pk	---	---	---	---

Continued to next page

Note
- “○” marks mean that printing (or borderless printing) on the media is guaranteed. Pk = Photo Black, Mk = Matte Black
- The numbers in the “Spindle” column indicate the roll core diameter in inch. The “H” beside the number means “high tension” (without “H” means “normal tension”.)
- 4 side borderless printing (full-bleed print on all four sides) cannot be made with cut sheet media.

Table 1-10. Allowable EPSON and Other Media (continued)

Category	Type	Media name	Size	Form	Spindle Specifications	Borderless printing	8 color machine (Stylus Pro 7800/9800)				4 color machine (Stylus Pro 7400/9400)			
							EAI	Europe	Asia	Ink type	EAI	Europe	Asia	Ink type
Photo	RC-Heavy Weight Glossy	Premium Glossy Photo Paper	S-B/A3+	Cut Sheet	---	---	○	○	○	Pk	---	---	---	---
	RC-Heavy Weight Semigloss	Premium Semigloss Photo Paper	S-B/A3+	Cut Sheet	---	---	---	○	○	Pk	---	---	---	---
	RC-Heavy Weight Luster	Premium Luster Photo Paper	S-B/A3+	Cut Sheet	---	---	○	---	---	Pk	---	---	---	---
	RC-Heavy Weight Glossy	Platinum Photo Paper (TBD)	TBD	Cut Sheet	---	---	TBD	TBD	TBD	Pk	---	---	---	---
		EPSON UltraChrome Photo Paper Gloss 250	TBD	Roll	TBD	○	TBD	TBD	TBD	Pk	---	---	---	---
		EPSON UltraChrome Photo Paper Gloss 300	TBD	Cut Sheet	---	---	TBD	TBD	TBD	Pk	---	---	---	---
	RC-Heavy Weight Semigloss	EPSON UltraChrome Photo Paper Semigloss 250	TBD	Roll	TBD	○	TBD	TBD	TBD	Pk	---	---	---	---
		EPSON UltraChrome Photo Paper Semigloss 300	TBD	Cut Sheet	---	---	TBD	TBD	TBD	Pk	---	---	---	---
	RC-Heavy Weight Semimatte	EPSON UltraChrome Photo Paper Semimatte 250	TBD	Roll	TBD	○	TBD	TBD	TBD	Pk	---	---	---	---
		EPSON UltraChrome Photo Paper Semimatte 300	TBD	Cut Sheet	---	---	TBD	TBD	TBD	Pk	---	---	---	---
	RC-Heavy Weight Luster	EPSON UltraChrome Photo Paper Luster 250	TBD	Roll	TBD	○	TBD	TBD	TBD	Pk	---	---	---	---
		EPSON UltraChrome Photo Paper Luster 300	TBD	Cut Sheet	---	---	TBD	TBD	TBD	Pk	---	---	---	---

Continued to next page

Note
- "○" marks mean that printing (or borderless printing) on the media is guaranteed. Pk = Photo Black, Mk = Matte Black
- The numbers in the "Spindle" column indicate the roll core diameter in inch. The "H" beside the number means "high tension" (without "H" means "normal tension".)
- 4 side borderless printing (full-bleed print on all four sides) cannot be made with cut sheet media.

Table 1-10. Allowable EPSON and Other Media (continued)

Category	Type	Media name	Size	Form	Spindle Specifications	Borderless printing	8 color machine (Stylus Pro 7800/9800)				4 color machine (Stylus Pro 7400/9400)			
							EAI	Europe	Asia	Ink type	EAI	Europe	Asia	Ink type
Versatile	RC-Medium Weight Glossy	Premium Glossy Photo Paper	24”	Roll	2”	○	---	○	○	Pk	---	---	---	---
			36”	↑	↑	○	---	○	○	Pk	---	---	---	---
			44”	↑	↑	○	---	○	○	Pk	---	---	---	---
		Photo Glossy Paper (US)/ Photo Grade Glossy Paper (Europe, Asia)	420mm (A2)	Roll	2”	---	○	○	○	Pk	○	○	○	Mk
			24”	↑	↑	○	○	○	○	Pk	○	○	○	Mk
			36”	↑	↑	○	○	○	○	Pk	○	○	○	Mk
			44”	↑	↑	○	○	○	○	Pk	○	○	○	Mk
	RC-Medium Weight Semigloss	Premium Semigloss Photo Paper	24”	Roll	2”	○	---	○	○	Pk	---	---	---	---
			36”	↑	↑	○	---	○	○	Pk	---	---	---	---
			44”	↑	↑	○	---	○	○	Pk	---	---	---	---
		Photo Semigloss Paper (US)/ Photo Grade Semigloss Paper (Europe, Asia)	420mm (A2)	Roll	2”	---	○	○	○	Pk	○	○	○	Mk
			24”	↑	↑	○	○	○	○	Pk	○	○	○	Mk
			36”	↑	↑	○	○	○	○	Pk	○	○	○	Mk
			44”	↑	↑	○	○	○	○	Pk	○	○	○	Mk
	Paper-Heavy Weight Matte	Doubleweight Matte Paper	24”	Roll	2”	○	○	○	○	Pk, Mk	○	○	○	Mk
			36”	↑	↑	○	○	○	○	Pk, Mk	○	○	○	Mk
			44”	↑	↑	○	○	○	○	Pk, Mk	○	○	○	Mk
	Paper-Light Weight Matte	Singleweight Matte Paper	17”	Roll	2”	○	○	○	○	Pk, Mk	○	○	○	Mk
			24”	↑	↑	○	○	○	○	Pk, Mk	○	○	○	Mk
			36”	↑	↑	○	○	○	○	Pk, Mk	○	○	○	Mk
			44”	↑	↑	○	○	○	○	Pk, Mk	○	○	○	Mk
			S-B/A3+	Cut Sheet	---	---	○	○	○	Pk, Mk	○	○	○	Mk
			A2	Cut Sheet	---	---	---	○	○	Pk, Mk	---	○	○	Mk
			USC	Cut Sheet	---	---	○	---	---	Pk, Mk	○	---	---	Mk
	High Quality Paper	Photo Quality Ink Jet Paper (Europe A4 only KANZAN, all others ESF)	A4	Cut Sheet	---	---	---	○	○	Pk, Mk	---	○	○	Mk
			LTR	↑	---	---	○	---	---	Pk, Mk	○	---	---	Mk

Continued to next page

Note
- “○” marks mean that printing (or borderless printing) on the media is guaranteed. Pk = Photo Black, Mk = Matte Black
- The numbers in the “Spindle” column indicate the roll core diameter in inch. The “H” beside the number means “high tension” (without “H” means “normal tension”.)
- 4 side borderless printing (full-bleed print on all four sides) cannot be made with cut sheet media.

Table 1-10. Allowable EPSON and Other Media (continued)

Category	Type	Media name	Size	Form	Spindle Specifications	Borderless printing	8 color machine (Stylus Pro 7800/9800)				4 color machine (Stylus Pro 7400/9400)			
							EAI	Europe	Asia	Ink type	EAI	Europe	Asia	Ink type
Proofing	RC-Medium Weight Semimatte	EPSON Proofing Paper Semimatte (Commercial Semimatte)	13”	Roll	2”	---	○	○	○	Pk	---	---	---	---
			17”	↑	↑	---	○	○	○	Pk	---	---	---	---
			24”	↑	↑	---	○	○	○	Pk	---	---	---	---
			36”	↑	↑	---	○	○	○	Pk	---	---	---	---
			44”	↑	↑	---	○	○	○	Pk	---	---	---	---
			S-B/A3+	Cut Sheet	---	---	○	○	○	Pk	---	---	---	---
		EPSON Proofing Paper Publication Semimatte (Publication Proofing Paper)	13” (TBD)	Roll	2”	---	○	---	---	Pk	---	---	---	---
			17” (TBD)	↑	↑	---	○	---	---	Pk	---	---	---	---
			24” (TBD)	↑	↑	---	○	---	---	Pk	---	---	---	---
			36” (TBD)	↑	↑	---	○	---	---	Pk	---	---	---	---
			44” (TBD)	↑	↑	---	○	---	---	Pk	---	---	---	---
			S-B/A3+ (TBD)	Cut Sheet	---	---	○	---	---	Pk	---	---	---	---
Fine Art	Paper-Heavy Weight Matte, Smooth	US: Enhanced Matte Paper (Roll/CS) Europe/Asia: Enhanced Matte Paper (Roll) Archival Matte Paper (Cut Sheet)	17”	Roll	3”	---	○	○	○	Pk, Mk	○	○	○	Mk
			24”	↑	↑	---	○	○	○	Pk, Mk	○	○	○	Mk
			36”	↑	↑	---	○	○	○	Pk, Mk	○	○	○	Mk
			44”	↑	↑	---	○	○	○	Pk, Mk	○	○	○	Mk
			S-B/A3+	Cut Sheet	---	---	○	○	○	Pk, Mk	○	○	○	Mk
			USC	Cut Sheet	---	---	○	---	---	Pk, Mk	○	---	---	Mk
	Paper-Heavy Weight Matte, Textured	Watercolor Paper - Radiant White	24”	Roll	3”H	---	---	○	○	Pk, Mk	---	---	---	---
			36”	↑	↑	---	---	○	○	Pk, Mk	---	---	---	---
			44”	↑	↑	---	---	○	○	Pk, Mk	---	---	---	---
			S-B/A3+	Cut Sheet	---	---	○	○	○	Pk, Mk	---	---	---	---

Continued to next page

Note
- “○” marks means that printing (or borderless printing) on the media is guaranteed. Pk = Photo Black, Mk = Matte Black
- The numbers in the “Spindle” column indicate the roll core diameter in inch. The “H” beside the number means “high tension” (without “H” means “normal tension”.)
- 4 side borderless printing (full-bleed print on all four sides) cannot be made with cut sheet media.

Table 1-10. Allowable EPSON and Other Media (continued)

Category	Type	Media name	Size	Form	Spindle Specifications	Borderless printing	8 color machine (Stylus Pro 7800/9800)				4 color machine (Stylus Pro 7400/9400)			
							EAI	Europe	Asia	Ink type	EAI	Europe	Asia	Ink type
Fine Art	Cotton Matte, Smooth	UltraSmooth Fine Art Paper (Roll: 250g/m^2 / Cut Sheet: 325g/m^2)	17”	Roll	3”H	---	○	○	○	Pk, Mk	---	---	---	---
			24”	↑	↑	---	○	○	○	Pk, Mk	---	---	---	---
			44”	↑	↑	---	○	○	○	Pk, Mk	---	---	---	---
			S-B/A3+	Cut Sheet	---	---	○	○	○	Pk, Mk	---	---	---	---
			USC	Cut Sheet	---	---	○	○	○	Pk, Mk	---	---	---	---
		Velvet Fine Art Paper	S-B/A3+	Cut Sheet	---	---	○	○	---	Pk, Mk	---	---	---	---
	Cotton Matte, Textured	Textured Fine Art Paper	17”	Roll	3”H	---	○	○	○	Pk, Mk	---	---	---	---
			24”	↑	↑	---	○	○	○	Pk, Mk	---	---	---	---
			36”	↑	↑	---	○	○	○	Pk, Mk	---	---	---	---
			44”	↑	↑	---	○	○	○	Pk, Mk	---	---	---	---
			24” x 30”	Cut Sheet	---	---	○	○	○	Pk, Mk	---	---	---	---
			30” x 40”	Cut Sheet	---	---	○	○	○	Pk, Mk	---	---	---	---
	Canvas	Canvas	24”	Roll	2”	---	○	○	○	Pk, Mk	---	---	---	---
			36”	↑	↑	---	○	○	○	Pk, Mk	---	---	---	---
			44”	↑	↑	---	○	○	○	Pk, Mk	---	---	---	---
Board	Board Matte	Enhanced Matte Posterboard	24” x 30”	Cut Sheet	---	---	○	○	○	Pk, Mk	○	○	○	Mk
			30” x 40”	Cut Sheet	---	---	○	○	○	Pk, Mk	○	○	○	Mk
Sign & Display	PP Soft Film Matte	Enhanced synthtic paper	24”	Roll	2”H	---	---	---	---	---	○	○	○	Mk
			36”	↑	↑	---	---	---	---	---	○	○	○	Mk
			44”	↑	↑	---	---	---	---	---	○	○	○	Mk
		Enhanced adhesive synthetic paper	24”	Roll	2”H	---	---	---	---	---	○	○	○	Mk
			36”	↑	↑	---	---	---	---	---	○	○	○	Mk
			44”	↑	↑	---	---	---	---	---	○	○	○	Mk
CAD	Tracing Paper	M80 (* Tracing Paper is an external product)	---	Roll	---	---	---	---	---	---	○	○	○	Mk

Note
- “○” marks mean that printing (or borderless printing) on the media is guaranteed. Pk = Photo Black, Mk = Matte Black
- The numbers in the “Spindle” column indicate the roll core diameter in inch. The “H” beside the number means “high tension” (without “H” means “normal tension”.)
- 4 side borderless printing (full-bleed print on all four sides) cannot be made with cut sheet media.

1.2.5 Mechanism Specifications

1.2.5.1 Printable Area

Table 1-11. Printable Area

Item	Roll paper /Cut Sheet	Model	Dimension
PW (Paper width)	Roll paper *1	Stylus Pro 7400/7800	203mm~610mm
		Stylus Pro 9400/9800	203mm~1,118mm
	Cut Sheet	Stylus Pro 7400/7800	203mm~610mm
		Stylus Pro 9400/9800	203mm~1,118mm
PL (Paper length)	Roll paper	All models	Maximum 202m
	Cut Sheet	All models	279mm~1,580mm
TM (Top margin)	Roll paper	All models	3mm / 15mm / 35mm*2
	Cut Sheet	All models	3mm
BM (Bottom margin)	Roll paper	All models	3mm / 15mm
	Cut Sheet	All models	14mm
LM (Left margin)	Roll paper	All models	0mm / 3mm / 15mm
	Cut Sheet	All models	0mm / 3mm
RM (Right margin)	Roll paper	All models	0mm / 3mm / 15mm
	Cut Sheet	All models	0mm / 3mm

Note "*1": The printer automatically detects paper width when the paper is set if the automatic detection function is set to ON.

"*2": Some types of roll paper have exceptional TM of over 15mm.

Note
- Images that exceed the detected paper width, or exceed the specified printing range in the size settings, are not printed.
  (If the paper width detection settings are OFF, the printer may print to the platen.)
  *At this time, a rainbow phenomenon is not generated.
- The margin settings can be changed using the panel as shown below for roll paper.
  TM, BM 15mm LM, RM 3mm/ TM, BM, LM, RM 3mm/ TM, BM, LM, RM 15mm/ TM 35mm BM 15mm LM, RM 3mm
  *In the special conditions below, it is possible to set the left and right margins (LM, RM) to zero.

3: When printing off both left and right edges of the media, the bleed on both sides is set to 3 mm as the automatic skew detection function can sense 3 mm or more horizontal shift of the media during printing. If the printer detects that the bleeding width (from left or right edge of media to the platen edge) is less than 3 mm, it reduces the bleed print amount to avoid printing on the platen.

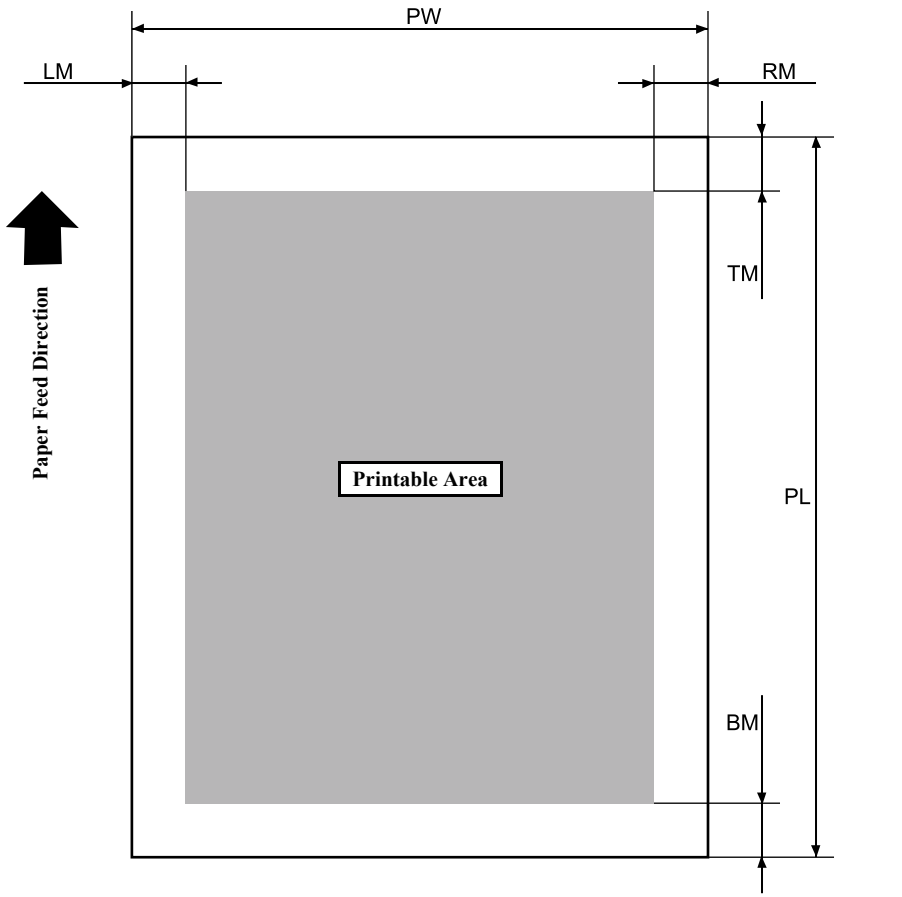

Figure 1-1. Printable Area

1.2.5.2 Borderless Printing Specifications

BORDERLESS PRINTING WIDTH

☐ The printer is capable of printing off both left and right edges of roll or cut sheet media with widths shown in the table below.

Table 1-12. Paper Width

Size			Stylus Pro 7400/7800	Stylus Pro 9400/9800
inches	mm	regular size		
10”	254mm	---	○	○
---	300mm	---	○	○
13”	329mm	A3+	○	○
16”	406.4mm	---	○	○
17”	431.8mm	---	○	○
---	515mm	B2	○	○
---	594mm	A1	○	○
24”	609.6mm	---	○	○
---	728mm	B1	---	○
36”	914.4mm	---	---	○
44”	1,117.6mm	---	---	○

Note
- The borderless printing is not guaranteed for all types of media, and it cannot be made properly under some conditions. See “Borderless printing guarantee conditions (p.25)” for more information.
- Print data extend off the borderless printable area is automatically cut off.

BORDERLESS PRINTING MODE

The following borderless printing modes are supported by command transmission from the driver.

Table 1-13. Borderless Printing Mode

Mode	Operation
Right/left borderless (default) *1	Left and right margins can be set to zero. In this case the upper and lower margins are set by the roll paper margin settings.
4 sides borderless/ Single Cut *1, *2, *3	Cuts the top and bottom edges in the way as described below to create a printout without margins on all four sides: • The top edge of the first page is cut off leaving “minimum cut margin”.during the printing. • No margin is created between pages and the printer cuts on the boundary to separate the pages. • The bottom edge of the last page is cut off after the printing is complete.
4 sides borderless/ Double Cut *1, *2, *3	Cuts the top and bottom edges in the way as described below to create a printout without margins on all four sides. • The top edge of the first page is cut off leaving “auto refresh margin” during the printing. • Each time printing one page is complete, the bottom edge is cut off and the paper is fed a little (create a minimum cut margin between pages), and the top edge of the next page is cut off during printing. This mode is more accurate than the Single Cut mode as it cuts the paper twice to separate pages.

Note "*1": When the roll paper cutter is OFF and cut line printing is ON, a cut line is printed on each cut position including the one for cutting the top edge.

"*2": After the 4 sides borderless cut, the actual printed size is approximately 2mm smaller in the vertical direction.

"*3": When roll paper borderless print for 4 sides is performed on the media types shown below, irregular coloring may occur when the edges are cut.

- Double Weight Matte Paper
- Single Weight Matte Paper
- Enhanced Matte Paper
- Textured Fine Art Paper
- Ultra Smooth Fine Art Paper

BORDERLESS PRINTING SETTING PROCEDURES

Table 1-14. Borderless Printing Setting

Borderless print mode	Right/left borderless	4 sides borderless Single Cut	4 sides borderless Double Cut
Printer operation	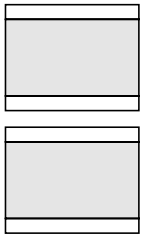		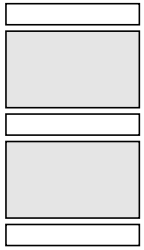
Driver setting	Borderless print	• Borderless print • Single Cut	• Borderless print • Double Cut
Remarks	Defined as default	• As the top edge of the first page is cut by interrupting the printing operation, off-registration may occur causing irregular color on the printed image depending on the print job. • As this mode cuts the paper on the boundary of pages, slight amount of image of the previous or the next page may be left on the top or bottom edge of the printout due to cutter position deviation.	• As the top edge of the first page is cut by interrupting the printing operation, off-registration may occur causing irregular color on the printed image depending on the print job. • The cutting position is set to a line 1 mm inside from the actual top and bottom edges allowing for cutter position deviation. So the length of the printout becomes about 2mm smaller than the specified size.

BORDERLESS PRINTING GUARANTEE CONDITIONS

☐ Borderless printing guarantee conditions

- Environmental:
  Temperature: 59 to 77ºF (15 to 25 ºC), Humidity: 40 to 60 % RH
- Media type *4: Photo type media (roll paper),
  POP • poster type media (roll paper) *1, *2, *3
- Media size *4
  - Photo type media: 10”, 300mm, 13”, 16”, 17”, 24”, 36”, 44”
  - POP • poster type media: A1, B1, B2

NOTE "*1": *For details on borderless printing guaranteed media, refer to “1.2.4.4 Allowable EPSON and Other Media” (p.18).*

"*2": *There are no borderless printing guarantees for cut sheet paper.*

"*3": *Borderless printing is not guaranteed if a number of outer layers of the roll surface have stretched due to moisture absorption.*

"*4": *Borderless ptinting on media and sizes other than those listed above are guaranteed the same way as the Stylus Pro 7600/9600 do. However, if media that has been stretched by humidity and other environmental conditions is used, it is possible that borders on the right and left hand sides may occur.*

☐ Bleeding print width for printing off both left and right edges

The bleeding print width for the left and right edges can be selected among the following settings using the printer driver.

- Left (opposite home side) = 1.5mm/ Right (home side) = 1.5mm
- Left (opposite home side) = 3.0mm/ Right (home side) = 3.0mm (Default)
- Left (opposite home side) = 5.0mm/ Right (home side) = 3.0mm *1, *2

NOTE "*1": *If humid environmental conditions have caused the media to stretch, “Left (opposite home side) = 5.0mm/ Right (home side) = 3.0mm” selection is recommended to prevent left and right edge margins occurring.*

"*2": *The “Left (opposite home side) = 5.0mm/ Right (home side) = 3.0mm” setting shifts the center position of the image 1 mm away from that of the print data.*

1.2.5.3 Cut Specifications

Both automatic and manual cut are available on this printer.

CAUTION

There are some types of media which are not allowed to be cut automatically. Be sure not to perform the automatic cutting with them, or may result in damaging the printhead.

ROLL PAPER AUTOMATIC CUT

This function is enabled by setting “Roll Auto Cut” in the Panel Setting menu to ON.

- Mechanical condition
  - Distance between the cutting position and paper setting position: L0 = 187mm
  - Distance between the cutting position and cutter mark: L1 = 34mm
  - Minimum cut length: L2 = 127mm
  - Sheet edge standby location: L3 = 130mm

ROLL PAPER MANUAL CUT

The automatic cutting prohibited media can be cut manually following the procedure described below.

1. Press the [Paper Select ◀] button to select the [Roll Auto Cut Off] and press the [Enter ↵] button.
2. Paper is automatically fed to the cutter guide, then the printer will go offline. At this point, “PAUSE” will be displayed on the panel.
3. If required, fine adjustments on the cut position can be performed using the [Paper feed ▼ (▲)] buttons.
4. The user can then use the manual cutter unit and cut the paper along the cutter guide.
5. After cutting the paper, cancel the pause status (press the [Pause] button). The paper will back feed and the printer will go back online.

CHECK POINT

For manual cutting of roll paper, use the manual cutter available as an option.

1.2.5.4 Paper Set Lever

Table 1-15. Paper Set Lever

Lever Position	Description
Backward	Position for paper setting (Paper holding is released, and paper can be set.)
Forward	Ready-to-print position (Paper is fixed, and it becomes ready to be printed.)

1.2.6 Electrical Related Information

- Rated voltage: 100 to 240 VAC
- Input voltage range: 90 to 264 VAC
- Rated frequency range: 50 to 60 Hz
- Input frequency range: 49 to 61 Hz
- Rated current: 1.0 to 0.5 A
- Power consumption
  - Operating:
    - Stylus Pro 7400/7800: 50 W
    - Stylus Pro 9400/9800: 55 W
  - Power off mode: Less than 6 W (Shifting time 15 minutes)
  - When power switch is OFF: Less than 1 W
- Insulation resistance: More than 10 M ohms (500 VDC between AC line and chassis)
- Dielectric strength: AC1.0 kV rms 1minute or AC1.2 kVrms 1 second (between AC line and chassis)
- Leakage: Less than 0.25 mA [Adapts Japan National Electronics Development Incorporated Association "Personal Computer Industry Standard" (PC-11-1988)].
- Energy conservation:
  - International Energy Star Program compliant (Measure for harmonic component suppression guideline)
- Electromagnetic interference standards compliance
  - VCCI class B

1.2.7 Reliability

1.2.7.1 Main Body Life

- Stylus Pro 7400/7800:
  6,300,000 carriage movement cycles
  (Approx. 20,000 pages of B0-size plain paper in "Quality" (Bi-D FOL) mode)
- Stylus Pro 9400/9800:
  3,700,000 carriage movement cycles
  (Approx. 20,000 pages of A1-size plain paper in "Quality" (Bi-D FOL) mode)

1.2.7.2 Print Head Life

- Monochrome: 28 billion shot/nozzle
- Color: 28 billion shot/nozzle

1.2.7.3 Maintenance Tank Life-span Guide

- Stylus Pro 7800: Approx. 1,300 sheets (A1+ size plain paper, Quality mode, Continuous printing)
- Stylus Pro 7400: Approx. 2,000 sheets (A1+ size plain paper, Quality mode, Continuous printing)
- Stylus Pro 9800
  - CR HP side: Approximately 1,000 sheets (B0+ size plain paper, Quality mode, Continuous printing)
  - Anti HP side: Approximately 7,800 sheets (B0+ size plain paper, Quality mode, Continuous printing)
- Stylus Pro 9400
  - CR HP side: Approximately 1,700 sheets (B0+ size plain paper, Quality mode, Continuous printing)
  - Anti HP side: Approximately 26,000 sheets (B0+ size plain paper, Quality mode, Continuous printing)

1.2.7.4 Cutter Life-span

Table 1-16. Cutter Life-span

Paper type	Stylus Pro 7400/7800 When performing 4 stage cut on 24” standard roll paper	Stylus Pro 9400/9800 When performing 4 stage cut on 44” standard roll paper
Coated paper	Approximately 2000 sheets	Approximately 2000 sheets
Film	Approximately 1000 sheets	Approximately 1000 sheets

1.2.7.5 Replacement Parts Life-span

Table 1-17. Replacement Parts Life-span

Replacement parts	Stylus Pro 7800*1	Stylus Pro 7400*1	Stylus Pro 9800*2	Stylus Pro 9400*2
RTC backup battery	TBD	TBD	TBD	TBD
Cleaning unit • Cap assembly • Pump assembly • Flashing box • Wiper	Approx. 17,000 sheets	Approx. 25,000 sheets	Approx. 11,000 sheets	Approx. 18,000 sheets
CR Motor	Approx. 20,000 sheets			
• Driven pulley • Carriage unit • Tubes • FFC	Approx. 20,000 sheets			

Note "*1": A1 size plain paper, Speed mode, Continuous printing)

"*2": B0 size plain paper, Speed mode, Continuous printing)

1.2.7.6 MTBF (Mean Time Between Failures)

- ☐ 20,000 POH (with no malfunction of electric parts and fans)

Table 1-18. Conditions

Item	Stylus Pro 7400/7800	Stylus Pro 9400/9800
Environment	Normal room temperature and humidity	
Printing Duty	• Approx. 18% • Power supply ON time: 11.0 hours/day • Operation (printing) time: 2.0 hours/day	• Approx. 32% • Power supply ON time: 11.0 hours/day • Operation (printing) time: 3.5 hours/day

1.2.7.7 MPBF (Mean Pages Between Failure)

- ☐ Stylus Pro 7400/7800: More than 22 sheets of A1 by continuous printing
- ☐ Stylus Pro 9400/9800: More than15 sheets of B0 by continuous printing

NOTE: *Without running a cleaning, no dot missing, and no skew.*

Table 1-19. Conditions

Item	All Models
Printing mode	• 720 x 720dpi FOL, Bi-D • 7 sheets/day x 3days • 7 sheets/day x 22 sheets/day
Print ratio	Single color 5%, and single color 30%
Environment	Under the following three kinds of environmental conditions: • Temperature: 10 °C, Humidity: 20% • Normal room temp. and humidity • Temperature: 35 °C, Humidity: 20%

1.2.7.8 Ink Cartridge Life-span (TBD)

Table 1-20. Ink Cartridge Lifespan of Stylus Pro 7800/9800

Ink cartridge	Stylus Pro 7800		Stylus Pro 9800	
	110ml	220ml	110ml	220ml
Photo Black (Pk)				
Matte Black (Mk)				
Light Black (Lk)				
Light Light Black (LLk)				
Cyan (C)				
Magenta (M)				
Yellow (Y)				
Light Cyan (Lc)				
Light Magenta (Lm)				

Note : Conditions:

- Printed patterns: Bike, print ratio is 40% for single color
- All top, bottom, left and right margins were set to 3 mm for both A1 (for the Stylus Pro 7800) and B0 (for the Stylus Pro 9800).

Table 1-21. Ink Cartridge Lifespan of Stylus Pro 7400/9400

Ink cartridge	Stylus Pro 7400		Stylus Pro 9400	
	110ml	220ml	110ml	220ml
Photo Black (Pk)				
Cyan (C)				
Magenta (M)				
Yellow (Y)				

Note : Conditions:

- Printed patterns: Bike, print ratio is 40% for single color
- All top, bottom, left and right margins were set to 3 mm for both A1 (for the Stylus Pro 7400) and B0 (for the Stylus Pro 9400).

1.2.8 Environmental Conditions

1.2.8.1 Temperature/Humidity

Table 1-22. Temperature/Humidity

Condition	Temperature*1	Humidity*2
Operating	10 τo 35 °C	20 to 80 %
Storage	–20 τo 40 °C	20 to 85 %
Transporting	–20 τo 60 °C	5 to 85 %

Note "*1": 40°C is for less than 1 month, 60°C is for less than 120 hours)

"*2": Should be no condensation and be within the range shown on the graph below.

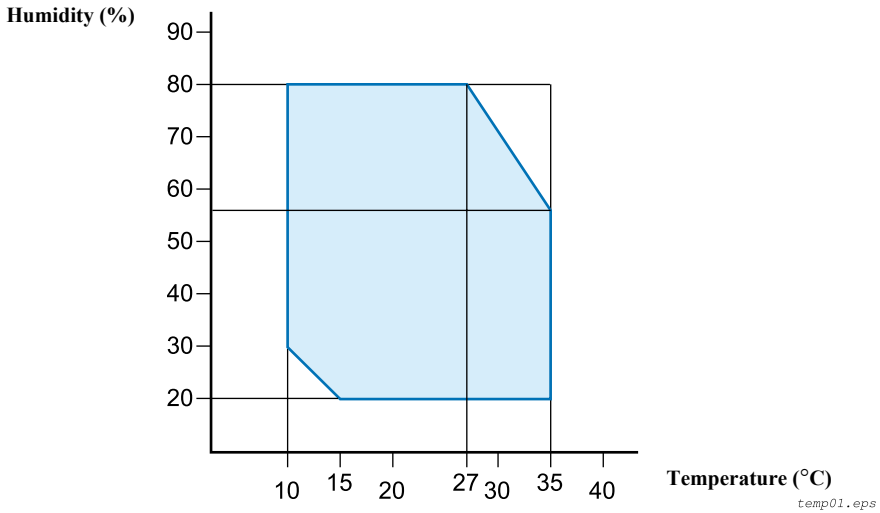

Figure 1-2. Allowable Range of Temperature and Humidity

1.2.8.2 Vibration Resistance

- Operating: 0.15 G, 10 to 55 Hz in X, Y, Z direction
- Store: 0.50 G, 10 to 55 Hz in X, Y, Z direction

1.2.8.3 Shock Resistance

- Operating: 1G within 1 millisecond in X, Y, Z direction
- Store: 2G within 2 milliseconds in X, Y, Z direction

NOTE
- *Check that the printhead is capped when storing the printer for a long period of time.*
- *When transporting the printer, check that the printhead is capped, all ink cartridges are removed, and the ink cartridges covers are closed and fixed.*
- *If the printhead are not capped, turn the power back ON with the ink cartridges installed, and then turn the power OFF again after confirming the capping operation is complete.*
- *If the printer is left under an ambient temperature of minus 15℃, ink inside the printhead and ink cartridges will freeze.*
  If this happens, move the printer, or heat the room so that the ambient temperature is 25℃, and leave the printer under the temperature for approximately 3 hours to melt the ink.

1.2.9 Overall Dimensions

1.2.9.1 Stylus Pro 7400/7800 Overall Dimensions

☐ Dimensions of Unit

Conditions	Width (W) x Depth (D) x Height (H) (mm)
Printer body	1,178 x 501 x 560
Rearward paper eject	1,178 x 745 x 1,180
Frontward paper eject	1,178 x 1,035 x 1,180

Note • For “rearward paper eject”, the paper exit tray is brought down toward the rear.
• For “frontward paper eject”, the paper exit tray is brought down toward the front.

☐ Mass

Conditions	Mass
Main body (without base mounted)*	Approx. 48.9kg
Base	Approx. 10.5kg

Note "*": Excluding ink cartridges and papers

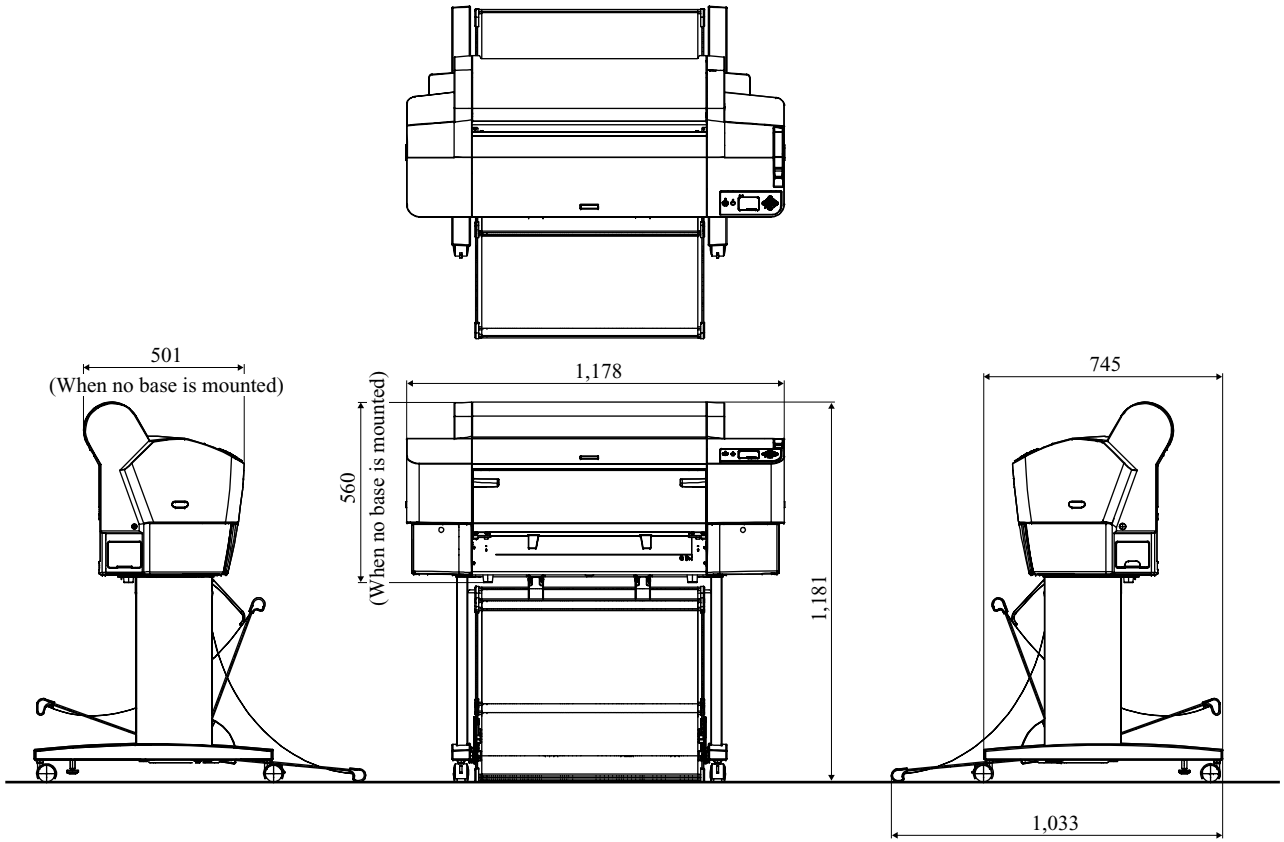

Figure 1-3. External Dimension of the Stylus Pro 7400/7800

1.2.9.2 Stylus Pro 9400/9800 Overall Dimensions

☐ Outer dimensions

Conditions	Width (W) x Depth (D) x Height (H) (mm)
Printer body	1,702 x 681 x 1,196
Rearward paper eject	1,702 x 681 x 1,196
Frontward paper eject	1,702 x 838 x 1,196

Note • For “rearward paper eject”, the paper exit tray is brought down toward the rear.
• For “frontward paper eject”, the paper exit tray is brought down toward the front.

☐ Mass

Conditions	Mass
Main body (without base mounted)*	Approx. 67.5kg
Base	Approx. 22.5kg

Note "*": Excluding ink cartridges and papers

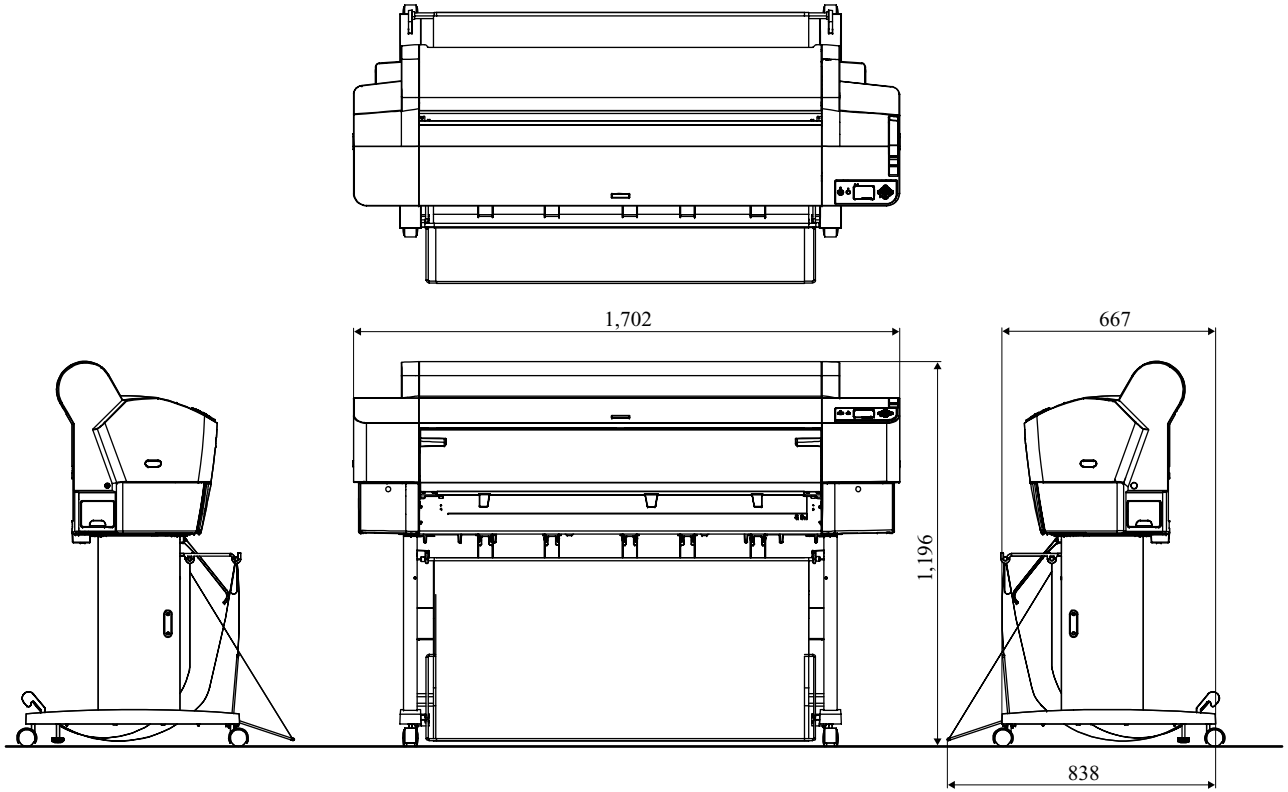

Figure 1-4. External Dimension of the Stylus Pro 9400/9800

1.2.10 Accessories/Options/Consumables

☐ Accessories/Options

Table 1-23. Accessories/Options

Item		Part No.	Stylus Pro 7800	Stylus Pro 7400	Stylus Pro 9800	Stylus Pro 9400
Standard accessories	Power cord	---	○	○	○	○
	Specialized Stand (base unit)	---	○	---	---	---
	2/3 inch Dual Roll Feed Spindle (24”)	---	○	○	---	---
	2/3 inch Dual Roll Feed Spindle (44”)	---	---	---	○	○
	Test roll paper (MC matte paper: Shared)	---	○	○	○	○
	Roll Paper Belt	---	○	○	○	○
	Ink Cartridge (110ml)*1	---	○	○	○	○
	Maintenance Tank*2	---	○	○	○	○
	Instruction Manual	---	○	○	○	○
	Printer Software CD-ROM (Printer driver, maintenance utilities)	---	○	○	○	○
	Application CD-ROM (Bundled software)	---	○	○	○	○
	Guarantee Issuance Invoice	---	○	○	○	○
	Business Card Holder	---	○	○	○	○
	Individual Packaging	---	○	○	○	○
Options common with other models	Specialized Stand (base unit)	C12C84408	○	○	---	---
	2/3 inch Dual Roll Feed Spindle (24”)	C12C811161	○	○	---	---
	2/3 inch Dual Roll Feed Spindle (44”)	C12C811151	---	---	○	○
	2/3 inch Dual Roll Feed Spindle (High Tension) (24”)	C12C811155	○	○	---	---
	2/3 inch Dual Roll Feed Spindle (High Tension) (44”)	C12C811152	---	---	○	○
	Normal/High tension spindle 24” <2”/3” core combination>	TBD	○	○	---	---
	Normal/High tension spindle 44” <2”/3” core combination>	TBD	---	---	○	○
	Manual Cutter Unit (24”)	C12C815231	○	○	---	---
	Manual Cutter Unit (44”)	C12C815182	---	---	○	○
	Auto Take-Up Reel Unit	C12C815251	---	---	○	○
	Auto Cutter Spare Blade	C12C815241	○	○	○	○
	Roll Paper Belt	TBD	○	○	○	○
	EpsonNet 10/100 Base Tx Int. Print Server 5	C12C82434	○	○	○	○

Note "*1": Stylus Pro 7800, Stylus Pro 9800 (1 of each color Pk, Mk, Lk, LLk, C, M, Lc, Lm, Y)
Stylus Pro 7400, Stylus Pro 9400 (2 of each color Mk, C, M, Y)

"*2": Stylus Pro 7400/7800: 1 tank,
Stylus Pro 9400/9800: 2 tanks

- Consumables
  - Ink cartridge (110 ml / 220 ml)

Table 1-24. Ink Cartridges of Stylus Pro 7800/9800

Cartridge	Part Number	
	110 ml (Standard)	220 ml (Option)
Photo Black (Pk)	C13T562130	C13T563130
Matte Black (Mk)	C13T566830	C13T567830
Light Black (Lk)	C13T562730	C13T563730
Light Light Black (LLk)	C13T562930	C13T563930
Cyan (C)	C13T562230	C13T563230
Magenta (M)	C13T562330	C13T563330
Light Cyan (Lc)	C13T562530	C13T563530
Light Magenta (Lm)	C13T562630	C13T563630
Yellow (Y)	C13T562430	C13T563430

Table 1-25. Ink Cartridges of Stylus Pro 7400/9400

Cartridge	Part Number	
	110 ml (Standard)	220 ml (Option)
Matte Black (Mk)	C13T566830	C13T567830
Cyan (C)	C13T566230	C13T567230
Magenta (M)	C13T566330	C13T567330
Yellow (Y)	C13T566430	C13T567430

  - Special paper (Refer to "1.2.4.4 Allowable EPSON and Other Media" *(p.18)* for paper type and size.
  - Maintenance tank

1.3 External View and Parts Names

EXTERNAL VIEW

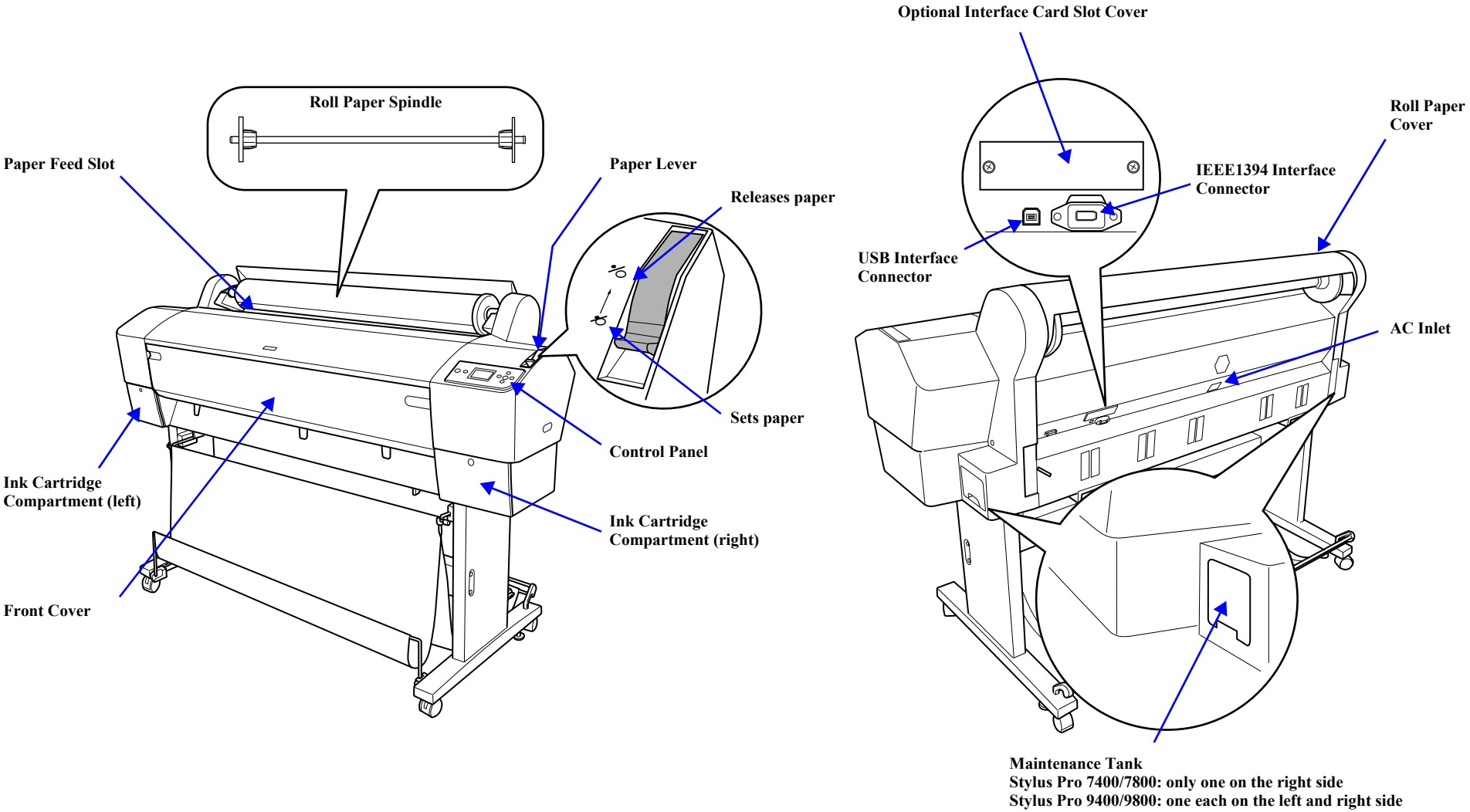

Figure 1-5. External View and Parts Names

1.4 Control Panel

1.4.1 Buttons and Functions

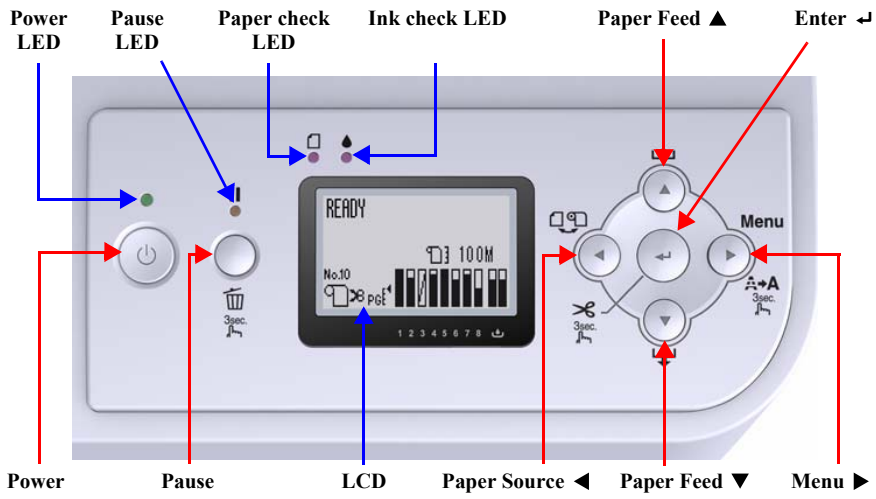

Figure 1-6. Panel Design

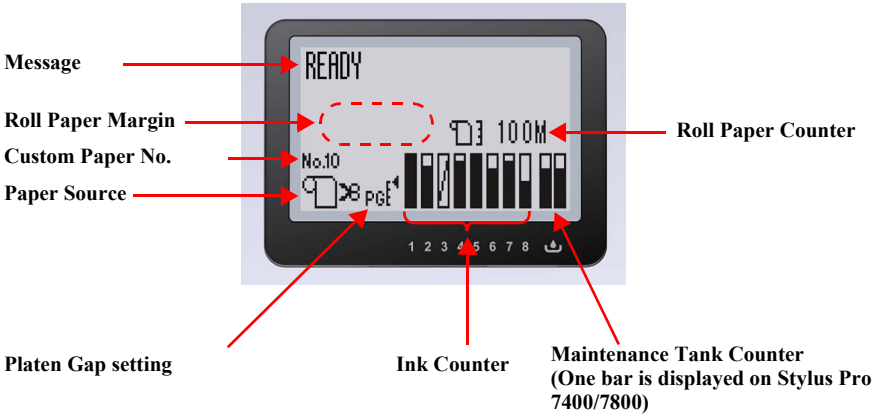

Figure 1-7. LCD Panel

1.4.1.1 LED

The following table describes the LED displays and status.

Table 1-26. LED

LED	Color	Displays	Status
Power	Green	ON	The power is ON.
		Flashing*1	Receiving data or executing power off sequence
		OFF	The power is OFF.
Pause	Yellow	ON*2	Temporarily stopping the operation (The yellow light also turns on when an error occurs).
		Flashing*1	---
		OFF	Ready for printing.
Paper Check	Red	ON	Impossible to make a print due to the paper status
		Flashing*1	• A paper feeding or ejecting error is occurring • The Paper Near-End warning is occurring • A maintenance call error is occurring.
		OFF	The papers are in normal condition without an error or warning.
Ink Check	Red	ON	An ink-related error is occurring
		Flashing*1	An ink-related warning is occurring
		OFF	The inks are in normal condition without an error or warning.

Note "*1": Alternately turns On and Off every 500 ms. In the case of maintenance call error, they light for 100 ms at intervals of five seconds.

"*2": When a printer error occurs, printing operation is disabled and the Pause LED turns ON.

Note : When a service call error occurs, the all LEDs flash.

1.4.1.2 Buttons

Table 1-27. Button Functions

Button	Functions		Function at the panel setting	Function (+ Power On)
	Normal One Press	Hold Down for Three Seconds*1		
Power	Turns the power ON or OFF *2	---	Power OFF	---
Pause	☐ Stops or restarts the printer operation*3 ☐ Waiting for paper initialization trigger*3	Reset	Interrupts panel setting	Maintenance mode
Menu ▶	☐ During printing Changes the panel display to the Status Menu*3 ☐ When Not printing Shifts the printer into the Panel Setting Mode *3	☐ When the paper thickness sensor detects less than 0.8mm. Runs a head cleaning*4 ☐ When the paper thickness sensor detects 0.8mm or more Runs a cleaning after a cleaning unavailable error is removed. * When the paper thickness sensor detects 0.8mm or more during printing. Does not function	Moves to the next menu item	---
Paper Select ◀	☐ During printing Does not function ☐ When Not printing Changes the paper type	Execute the Cutter Replacement Sequence*5	Moves to the previous menu item	---
Paper Feed ▲ *6	☐ When roll paper is set Back-feeds the roll paper *Does not work when roll paper is not set ☐ When releasing the paper set lever Increases suction of the Paper Suction fan	When roll paper is set Performs high-speed back-feeding of the roll paper *Does not work when roll paper is not set	Increases the setting value	---
Paper Feed ▼ *6	☐ When roll paper is set Feeds the roll paper *Does not work when roll paper is not set ☐ When releasing the paper set lever Decreases suction of the Paper Suction fan ☐ When A4 to A3+ sized cut sheet is manually loaded Feeds the cut sheet ☐ When a cut sheet is set Ejects the cut sheet	When roll paper is set Performs high-speed feeding of the roll paper *Does not work when roll paper is not set	Decreases the setting value	---

Continued to next page

Table 1-27. Button Functions (continued)

Button	Functions		Function at the panel setting	Function (+ Power On)
	Normal One Press	Hold Down for Three Seconds*1		
Enter ↵	Ejects a cut sheet when it is loaded after printing *Does not function under conditions other than above.	☐ When paper is loaded during printing with no error. ■ Roll paper: Cuts and ejects the paper ■ Cut sheet: Ejects the paper ☐ During drying ink on paper Stops drying ink and ejects the paper *Does not function under conditions other than above.	☐ Accepts the change of setting ☐ Executes the selected operation ☐ Saves the setting	---
Pause + Paper Select ◀	Enables or disables the Roll Paper Counter function when the printer is in “Ready” mode.*7	---	---	---
Menu ▶ + Paper Feed ▼ + Execution of setting ↵	---	---	---	SERVICEMAN MODE
Menu ▶ + Paper Select ◀ + Paper Feed ▲ + Paper Feed ▼	---	---	---	F/W download

Note "*1": In actual operation, two seconds are enough. (It does not mean that the printer works immediately after the two seconds.)

"*2": The printer is always turned OFF regardless of operation status.

"*3": The printer starts to function within 3 seconds after the switch is released.

"*4": The cleaning is conducted when the printer is idling during printing.

"*5": The Cutter Replacement Sequence can be executed in “Ready” status, and even when a warning error or Paper Out error is occurring.

"*6": During two seconds after the button is released, the printer feeds the paper at 5cps. Then the feeding speed is increased to 52 cps after a lapse of the two seconds.
The maximum back-feed amount that can be performed by pressing the button one time is less than 37 cm.

"*7": This works when REMAINING PPR SETUP in the Maintenance mode has been set to ROLL and the Roll Paper Counter setting has been made.

1.4.2 Panel Display

1.4.2.1 Panel Display (LCD and LED)

Note : Explanation of marks used in the following table
- ○: Functions
- X: Does Not function
- ---: The display is in accordance with the display of printer status under operation.

Table 1-28. Panel Display

Priority	Printer Status	Messages on the LCD	LED Status				Panel Button Function							
			Power	Pause	Ink	Paper	Paper Select	Enter	Paper ejection (3 sec.)	Paper feed	Menu	Cleaning (3 sec.)	Pause	Reset (3 sec.)
Low	Printable (idle status)/ Data processing	READY	ON	ON	ON	ON	○	X	○	○	○	○	○	○
	Printing	PRINTING	Flashing	OFF	OFF	---	X	X	X	X	○	○	○	○
	Unable to print	UNABLE TO PRINT MAKE SURE PAPAR IS LOADED	ON	ON	---	---	X	X	X	X	X	X	X	X
	Unable to execute sequence	UNABLE TO OPERATE UNABLE TO EXECUTE THE SELECTED OPERATION	---	ON	---	---	---	---	---	---	---	---	---	---
	Maintenance tank nearly full	MAINTENANCE TANK NEARLY FULL	---	---	Flashing	---	---	---	---	---	---	---	---	---
	Ink low*1	INK LOW	---	---	Flashing	---	---	---	---	---	---	---	---	---
	Paper out	PAPER OUT LOAD PAPER	ON	ON	---	ON	---	X	X	X	○	○	X	○
	Maintenance request	MAINTENANCE REQUEST XXXX	---	---	---	Flashing*2	---	---	---	---	---	---	---	---
	Paper low	PAPER LOW	---	---	---	Flashing	---	---	---	---	---	---	---	---
	Ink drying*3	INK DRYING NNNN SEC	Flashing	OFF	---	OFF	X	X	○	X	○	X	○	○
	Paper initializing	PLEASE WAIT	ON	OFF	---	OFF	X	X	X	X	X	X	X	○
High	Pause	PAUSE	ON	ON	---	---	---	X	X	X	X	○	○	○

Continued to next page

Table 1-28. Panel Display (continued)

Priority	Printer Status	Messages on the LCD	LED Status				Panel Button Function							
			Power	Pause	Ink	Paper	Paper Select	Enter	Paper ejection (3 sec.)	Paper feed	Menu	Cleaning (3 sec.)	Pause	Reset (3 sec.)
Low	In hexadecimal dump mode	PRINTING	Flashing	OFF	---	OFF	X	X	X	X	X	○	○	X
	Printing of internal data	PRINTING	Flashing	OFF	---	OFF	X	X	X	X	X	○	○	○
	Initial cutting	CUTTING PAPER PLEASE WAIT	ON	OFF	---	OFF	X	X	X	X	X	X	X	○
	Waiting for paper initialization trigger	PRESS PAUSE BUTTON	ON	ON	---	OFF	○	X	○	X *4	X	X	○	○
	Cleaning unavailable	CLEANING ERROR REMOVE THICK PAPER	ON	ON	---	ON	X	X	X	X	X	X	X	○
	Initializing operation*5	PLEASE WAIT	Flashing	OFF	---	OFF	X	X	X	X	X	X	X	○
	Cleaning failure	CLEANING ERROR PRESS PAUSE BUTTON	ON	ON	---	Flashing	X	X	X	X	X	X	○	○
	Ink mark sensor SN gain error Paper recognition error	SENSOR ERROR LOAD DIFFERENT PAPER	ON	ON	---	Flashing	---	X	X	X	X	X	X	○
	Paper eject error	PAPER EJECT ERROR REMOVE PAPER FROM PRINTER	ON	ON	---	Flashing	---	X	X	X	X	X	X	○
	Roll paper out	PAPER OUT LOAD PAPER	ON	ON	---	ON	---	X	X	X	X	○	X	○
	Borderless printing unavailable	BORDERLESS ERROR LOAD CORRECT SIZE PAPER	ON	ON	---	Flashing	X	X	X	○	X	X	X	○
	Paper recognition	PAPER ERROR LOAD PAPER PROPERLY	ON	ON	---	Flashing	---	X	X	○	X	X	X	○
	Paper skew/ Cut sheet loading error	PAPER SKEW LOAD PAPER PROPERLY	ON	ON	---	Flashing	---	X	X	○	X	X	X*6	○
	Paper cut error*7	PAPER CUT ERROR REMOVE UNCUT PAPER	ON	ON	---	Flashing	---	X	X	○	X	X	X	○
High	Command error	COMMAND ERROR CHECK DRIVER SETTINGS	Flashing	ON	Flashing	Flashing	X	X	X	X	X	X	X	○

Continued to next page

Table 1-28. Panel Display (continued)

Priority	Printer Status	Messages on the LCD	LED Status				Panel Button Function							
			Power	Pause	Ink	Paper	Paper Select	Enter	Paper ejection (3 sec.)	Paper feed	Menu	Cleaning (3 sec.)	Pause	Reset (3 sec.)
Low	IK command error	MISMATCH ERROR MAKE SURE THAT THE INK CARTRIDGE AND DRIVER SETTINGS MATCH	Flashing	ON	Flashing	Flashing	X	X	X	X	X	X	○	○
	Wrong roll paper path	PAPER SETTING ERROR LOAD ROLL PAPER	ON	ON	---	ON	○	X	X	X	X	X	X	○
	Wrong cut sheet path	PAPER SETTING ERROR LOAD CUT SHEET	ON	ON	---	ON	○	X	X	X	X	X	X	○
	Cleaning*8	CLEANING PLEASE WAIT	Flashing	OFF	---	---	X	X	X	X	X	X	X	○
	Executing ink sequence	PLEASE WAIT	Flashing	OFF	---	OFF	X	X	X	X	X	X	X	○
	Executing ink sequence (Confirming to run a Timer Cleaning)	POWER CLEANING YOU MUST MOVE INK LEVERS WHEN CLEANING NO EXECUTE? YES	Flashing	OFF	---	OFF	○	X	X	X	○	X	X	X
	Confirming to execute an initial ink charge*9	PRESS PAUSE BUTTON TO START CHARGING INK. PLEASE DO NOT LEAVE OPERATION IS NEEDED WHILE INK IS CHARGING	Flashing	OFF	---	---	X	X	X	X	X	X	○	X
	Initial charging	CHARGING INK NN%	Flashing	OFF	---	---	X	X	X	X	X	X	X	○
	Cutting by cut switch	CUTTING PAPER PLEASE WAIT	Flashing	OFF	---	OFF	X	X	X	X	X	X	X	○
	Conversion cartridge near end of service life	CONVERSION CRTG LIFE CONVERSION CRTG NEAR END OF SERVICE LIFE	Flashing	ON	ON	OFF	---	X	X	X	X	X	○	X
	Conversion cartridge life error	CONVERSION CRTG LIFE REPLACE CONVERSION CRTG WITH A NEW ONE.	Flashing	ON	ON	OFF	---	X	X	X	X	X	X	X
High	Ink out*10	INK OUT INSTALL NEW CARTRIDGE	ON	ON	ON	OFF	---	X	X	X	○	X	X	○

Continued to next page

Table 1-28. Panel Display (continued)

Priority	Printer Status	Messages on the LCD	LED Status				Panel Button Function							
			Power	Pause	Ink	Paper	Paper Select	Enter	Paper ejection (3 sec.)	Paper feed	Menu	Cleaning (3 sec.)	Pause	Reset (3 sec.)
Low	PK/MK error	INK CARTRIDGE ERROR CHECK CARTRIDGE	ON	ON	ON	OFF	---	X	X	X	X	X	○	○
	Wrong cartridge	INK CARTRIDGE ERROR CHECK CARTRIDGE	ON	ON	ON	OFF	---	X	X	X	X	X	○	○
	Wrong destination	INK CARTRIDGE ERROR CHECK CARTRIDGE	ON	ON	ON	OFF	---	X	X	X	X	X	○	○
	Unusable cartridge	INK CARTRIDGE ERROR INSTALL CORRECT CARTRIDGE	ON	ON	ON	OFF	---	X	X	X	X	X	X	○
	Incorrect logo error	INK CARTRIDGE ERROR INSTALL CORRECT CARTRIDGE	ON	ON	ON	---	---	X	X	X	X	X	○	○
	Ink cartridge failure CSIC contact error	INK CARTRIDGE ERROR INSTALL CORRECT CARTRIDGE	ON	ON	ON	OFF	---	X	X	X	○	X	X	○
	No ink cartridge	NO CARTRIDGE INSTALL INK CARTRIDGE	ON	ON	ON	---	---	X	X	X	○	X	X	○
	Maintenance tank full (Left) (Stylus Pro 9400 and Stylus Pro 9800)	MAINT TANK FULL REPLACE THE LEFT SIDE MAINTENANCE TANK	ON	ON	ON	---	---	X	X	X	X	X	X	○
	Maintenance tank full (Right) (Stylus Pro 9400 and Stylus Pro 9800)	MAINT TANK FULL REPLACE THE RIGHT SIDE MAINTENANCE TANK	ON	ON	ON	---	---	X	X	X	X	X	X	○
High	Maintenance tank full (Stylus Pro 7400 and Stylus Pro 7800)	MAINT TANK FULL REPLACE THE MAINTENANCE TANK	ON	ON	ON	---	---	X	X	X	X	X	X	○

Continued to next page

Table 1-28. Panel Display (continued)

Priority	Printer Status	Messages on the LCD	LED Status				Panel Button Function							
			Power	Pause	Ink	Paper	Paper Select	Enter	Paper ejection (3 sec.)	Paper feed	Menu	Cleaning (3 sec.)	Pause	Reset (3 sec.)
Low	Remaining capacity of the left Maintenance Tank is insufficient (Stylus Pro 9400/9800)	MAINT TANK NEAR FULL REPLACE THE LEFT SIDE MAINTENANCE TANK	ON	ON	Flashing	---	X	X	X	X	X	X	X	○
	Remaining capacity of the right Maintenance Tank is insufficient (Stylus Pro 9400/9800)	MAINT TANK NEAR FULL REPLACE THE RIGHT SIDE MAINTENANCE TANK	ON	ON	Flashing	---	X	X	X	X	X	X	X	○
	Remaining capacity of the Maintenance Tank is insufficient (Stylus Pro 7400/7800)	MAINT TANK NEAR FULL REPLACE THE MAINTENANCE TANK	ON	ON	Flashing	---	X	X	X	X	X	X	X	○
	Releasing left ink lever *10	INK LEVER LOWER THE LEFT INK LEVER	ON	ON	ON	---	---	X	X	X	X	X	X	○
	Releasing right ink lever *10	INK LEVER LOWER THE RIGHT INK LEVER	ON	ON	ON	---	---	X	X	X	X	X	X	○
	Printer cover open	COVER OPEN CLOSE COVER	ON	ON	---	---	---	X	X	X	X	X	X	○
	Releasing paper set lever	LEVER RELEASED LOAD PAPER	ON	ON	---	ON	---	X	X	○	X	X	X	○
	Releasing paper set lever in operation	LEVER RELEASED LOWER THE PAPER SET LEVER	ON	ON	---	ON	---	X	X	X	X	X	X	○
High	Replacing ink cartridge	INK CARTRIDGE INSTALL INK CARTRIDGE	ON	ON	ON	OFF	---	X	X	X	X	X	X	○

Continued to next page

Table 1-28. Panel Display (continued)

Priority	Printer Status	Messages on the LCD	LED Status				Panel Button Function							
			Power	Pause	Ink	Paper	Paper Select	Enter	Paper ejection (3 sec.)	Paper feed	Menu	Cleaning (3 sec.)	Pause	Reset (3 sec.)
Low	Paper jam	PAPER JAM REMOVE PAPER	ON	ON	OFF	Flashing	X	X	X	X	X	X	X	X
	No maintenance tank (Left) (Stylus Pro 9400/9800)	NO MAINTENANCE TANK INSTALL THE LEFT SIDE MAINTENANCE TANK	ON	ON	ON	---	---	X	X	X	X	X	X	○
	No maintenance tank (Right) (Stylus Pro 9400/9800)	NO MAINTENANCE TANK INSTALL THE RIGHT SIDE MAINTENANCE TANK	ON	ON	ON	---	---	X	X	X	X	X	X	○
	No maintenance tank (Stylus Pro 7400/7800)	NO MAINTENANCE TANK INSTALL THE MAINTENANCE TANK	ON	ON	ON	---	---	X	X	X	X	X	X	○
	Resetting	RESETTING PLEASE WAIT	ON	ON	ON	ON	X	X	X	X	X	X	X	X
	F/W updating	UPDATING FIRMWARE	OFF	OFF	OFF	OFF	X	X	X	X	X	X	X	X
	F/W update completed successfully	FIRMWARE UPDATE COMPLETE	OFF	OFF	OFF	OFF	X	X	X	X	X	X	X	X
	F/W update failure	F/W INSTALL ERROR UPDATE FAILED RESTART THE PRINTER	Flashing	Flashing	Flashing	Flashing	X	X	X	X	X	X	X	X
	Executing power off sequence	POWER OFF PLEASE WAIT	Flashing	ON	---	---	X	X	X	X	X	X	X	X
	Type B option I/F error	I/F CARD ERROR CHECK CARD TYPE	Flashing	Flashing	Flashing	Flashing	X	X	X	X	X	X	X	X
High	Restart request	PRINTER ERROR RESTART THE PRINTER	Flashing	Flashing	Flashing	Flashing	X	X	X	X	X	X	X	X

Continued to next page

Table 1-28. Panel Display (continued)

Priority	Printer Status	Messages on the LCD	LED Status				Panel Button Function							
			Power	Pause	Ink	Paper	Paper Select	Enter	Paper ejection (3 sec.)	Paper feed	Menu	Cleaning (3 sec.)	Pause	Reset (3 sec.)
Low	CR unreleased error	CARRIAGE LOCKED RELEASE THE CARRIAGE LOCK	Flashing	Flashing	Flashing	Flashing	X	X	X	X	X	X	X	X
High	Service call	SERVICE CALL ERROR NNNNNNNNN	Flashing	Flashing	Flashing	Flashing	X	X	X	X	X	X	X	X
---	Confirming to execute a black ink replacement sequence	INK CARTRIDGE ERROR BK INK CHANGE NO EXECUTE? YES	ON	ON	ON	---	○	X	X	X	○	X	○	○

Note "*1": If INK LOW and INK OUT errors occur at the same time, the corresponding indicators flashes for “LOW” state, and turns ON for “OUT” state.

"*2": The LED lights for 100 ms at intervals of 5 seconds.

"*3": The counter counts down every one second while drying ink.

"*4": The [Paper Feed ▼] button is available for feeding paper while performing automatic loading of a cut sheet media.

"*5": EPSON logo and a progress bar are displayed while running the power-on initialization sequence.

"*6": Returning the printer forcedly to its normal state from a cut sheet loading error can be made by pressing the [Pause] button.

"*7": When a cut error occurs for the first time after replacing the cutter, the printer runs the Cutter Replacement Sequence. See “1.4.4.32 Cutter Replacement” *(p.93)* for more information.

"*8": With the Stylus Pro 7800 and Stylus Pro 9800, an error of the maintenance tank on the anti-home side during cleaning does not interrupt the cleaning operation. The error message is displayed when the cleaning is complete.
When the printer detects a cleaning flag at power-on, it displays “Maintenance Tank Full” error for the anti-home side tank, and the remaining capacity is displayed after finishing the required cleaning.

"*9": The message is displayed immediately before the printer executes the initial ink charge to inform the user that the charging operation cannot be made without the assistance of an attendant. If an error has occurred before the initial ink charge, the confirming message is displayed after the error is removed. The printer displays the message only for the first initial ink charge after power-on. (If the charging operation is interrupted by an error, and restarted without turning the power OFF, the message is not displayed.)

"*10": When the Ink Lever is released for replacing the cartridge after “INK OUT” error occurs, the “INK OUT” and “INK LEVER” messages displayed alternately at intervals of three seconds.

Note
- ⊗ icon is displayed with error messages.
- When the printer is in an error status, the PG setting and Roll Paper Counter are not displayed in order to display instruction messages to recover from the error.
- A request to reboot the printer due to a paper jam is indicated only by the flashing of the Paper Check LED.
- See “3.2.1 List of Panel Messages” *(p.172)* for more information on the error display.

1.4.2.2 Icons on the LCD

☐ Paper Source

An icon corresponds to the selected media type (roll or cut sheet) is displayed.

Table 1-29. Paper Source Icon

Paper type	LCD
Roll paper auto cut ON	
Roll paper auto cut OFF	
Cut sheet	

☐ Custom Paper No.

The user-defined paper setting number created by the CUSTOM PAPER function in the panel setting menu is displayed. See "1.4.4.31 Custom Paper" *(p.87)* for more information on the CUSTOM PAPER.

Table 1-30. User Paper Setting No. Icon

User Paper Setting No.	LCD
1	No.1
2	No.2
⋮	⋮
9	No.9
10	No.10

☐ Platen Gap Setting

The platen gap setting made by the PLATEN GAP function in the panel setting menu is indicated. It does not appear when using the CUSTOM PAPER setting.

Table 1-31. Platen Gap Location Setting Icon

Platen Gap Location Setting	LCD
Widest	PGE
Wider	PGE
Wide	PGE
Narrow	PGE

☐ Roll Paper Margin

Margin setting for roll paper is indicated. It does not appear when the setting is default.

Table 1-32. Roll Paper Margin Icon

Platen Gap Location Setting	LCD
TOP/BOTTOM 15mm	15mm
TOP 35mm /BOTTOM 15mm	35/15mm
3mm	3mm
15mm	15mm

☐ Roll Paper Counter

The remaining amount of the roll paper is indicated. This icon appears when REMAINING PPR SETUP in the Maintenance mode has been set to ROLL and the Roll Paper Counter setting has been made.

■ Roll paper counter icon:

☐ Ink Counter and Maintenance Tank Counter

The remaining amount of ink in each cartridge and the free space of the Maintenance Tanks are indicated.

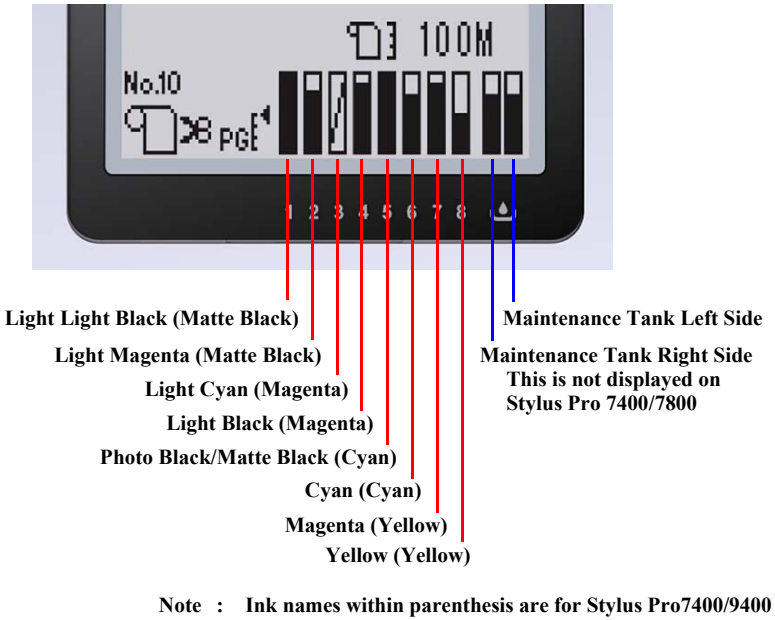

Figure 1-8. Ink and Maintenance Tank Counter Icons

Table 1-33. Ink and Maintenance Tank Counter Icons

Remaining Ink	Maintenance Tank Free Space	Icon
100 to 81 %		
80 to 61 %		
60 to 41 %		
40 to 21 %		
20 % or less (Until the Ink Low status occurs)	20 % or less (Until the Near-Full status occurs)	
Ink Low	Maintenance Tank Near Full	
Ink Out	Maintenance Tank Full	
Cartridge error No cartridge	Maintenance tank error No maintenance tank	

☐ Paper Suction

The suction power to attract paper can be adjusted when the Paper Set Lever is released, and when a paper is detected by the Rear Manual Feed sensor and the PE sensor. The suction level is indicated by an icon as shown below.

Table 1-34. Paper Suction Icon

Suction Power		Icon
High	168%	
Middle	60%	
Low	0%	

CHECK POINT

When rewinding roll paper to align its top edge with the guide line, setting the suction power to its maximum makes the work easier and accurately.

1.4.3 Job Information

☐ Job Definition

Each print job is defined as a "Job"* and the printer stores a variety of information on each job as job history. The following flowchart shows the storing procedure inside the printer.

NOTE: *As cleaning can be executed during printing, it is not defined as a job.*

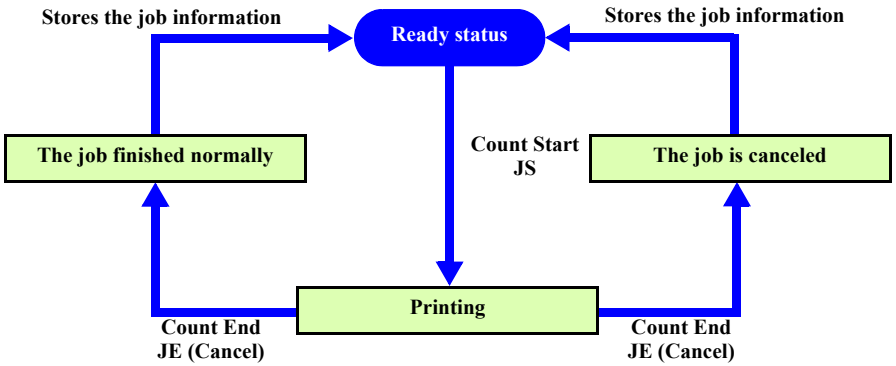

Figure 1-9. Storing Job Information

☐ Job Information

The job information (68 bytes x 10 jobs) is stored on the NVRAM on the main board and can be checked by JOB INFORMATION in the panel setting menu. The information includes the following items.

Table 1-35. Job Information

Parameter	Information	Remarks
xx1	The Quantity of Saved Job Information	0 to 10
xx2	Saving No.	0 to 9
xx3, xx4	ID No.	1 to 65535 (0 not used.)
xx5	Using I/F	01 to 05 (Parallel* / USB / OptionIF1 / OptionIF2* / IEEE1394) *1 FF: not use
xx6	Job Status	01 to 05 (Pending / Printing / Complete / Cancel / Abort)
xx7~xx8	Character String Code	Currently reserved as 00h 00h fixed.
xx9~xx24	User name (16 byte)	In case of less than maximum length, fill <SP>(20h).
xx25~xx56	Document name (32byte)	*2
xx57~xx72	Host name	Saves 16-byte out of 32-byte sent from the driver
xx73	Media ID	Media ID specified by the driver
xx74	Impression value	01-02, the value is 2 when DP=ON is specified in the job.
xx75~xx90	Ink used	[xxx.xx ml] Reply in the order of ink cartridge alignment
xx91~xx94	Paper Used	H:xxxx mm W:xxxx mm
xx95~xx100	Print Start Tim	YYMMDDhhmmss, Time of JS
xx101~xx106	Time Used for Print	YYMMDDhhmmss, Time of JE (Time of Complete/Cancel/Abort)
xx107	Ink set information	Same as IK
xx108	Paper path	Same as PP
xx109~xx110	Page number	---

Note "*1": Currently reserved as 00h 00h fixed.

"*2": As the printer is not equipped with a parallel I/F, 01h is reserved.

NOTE: *The saving values for each item when printing internal adjustment patterns are as shown below.*

Table 1-36. Job Information for Adjustment Pattern Printings

Pattern Type	Use I/F	Character Code	User Name	Document Name
Nozzle Check Pattern Print	FFh	00h	Printer	Nozzle Check
Status Print	FFh	00h	Printer	Status Sheet
Job Information Print	FFh	00h	Printer	Job Information
User Paper Setting Print	FFh	00h	Printer	Custom Paper
Bi-D Adjustment	FFh	00h	Printer	Head Alignment
Uni-D Adjustment	FFh	00h	Printer	Head Alignment
Paper Thickness Detection	FFh	00h	Printer	Detect Paper Thickness
Cutter Position Adjustment	FFh	00h	Printer	Cutter Position

1.4.4 Panel Setting

1.4.4.1 Outline

- Entering the Panel Setting Mode
  The printer can go into the Panel Setting mode by the [Menu ▶] button when it is in “Ready” status, and even when a warning error, Paper Out error, or ink cartridge error (except the cartridge destination error) is occurring. Printing operation is disabled while the printer is in the mode.

- Using the Panel Setting Menu
  1. When the [Menu ▶] button is pressed under the condition described above, the top menu of the Panel Setting menu is displayed.
  2. Use the [Paper Feed ▼ (▲)] buttons to select (highlight) the menu item. When a target item is highlighted, press the [Menu ▶] button to display the menu screen of the selected item.
  3. Select an item in the menu screen using the [Paper Feed ▼ (▲)] buttons and press theÇš[Menu ▶] button. A list of selectable settings is displayed.
  4. A setting displayed with * (asterisk) is the current setting. Use the [Paper Feed ▼ (▲)] buttons to change the setting.
  5. After highlighting your choice, press the [Enter ↵] button to accept the setting or execute the function. If you press the [Enter ↵] button when the current setting (with asterisk) is highlighted, nothing happens.
  6. To back to the previous screen, press the [Paper Select ◀] button.

- Exiting from the Panel Setting Mode
  Any one of the following operations returns the printer to “ready for printing” status.
  - Press the [Pause] button.
  - Press the [Paper Select ◀] button while the top menu is displayed.
  - When the INITIALIZE SETTINGS in the PRINTER SETUP menu is executed and finished.
  - When any one of items in the TEST PRINT menu is executed and finished.
  - When the BK INK CHANE (changing black ink between Photo black and Matte black) in the MAINTENANCE menu is executed and finished. (Stylus Pro 7800 and Stylus Pro 9800 only.)
  - When the CUTTER REPLACEMENT in the MAINTENANCE menu is executed and finished.

  NOTE: *While the printer running or executing the selected function in the Panel Setting menu, it cannot be returned to the ready status.*

☐ Panel display

NOTE: *Pressing the [Pause] button returns the printer to the ready status regardless which menu screen is displayed.*

■ Top menu

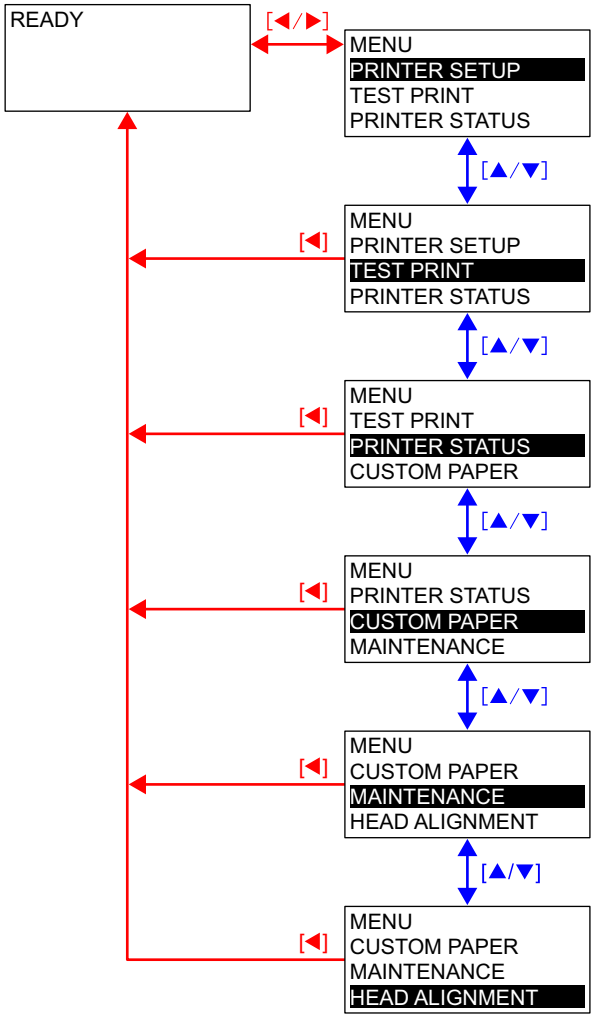

■ Printer Setup menu

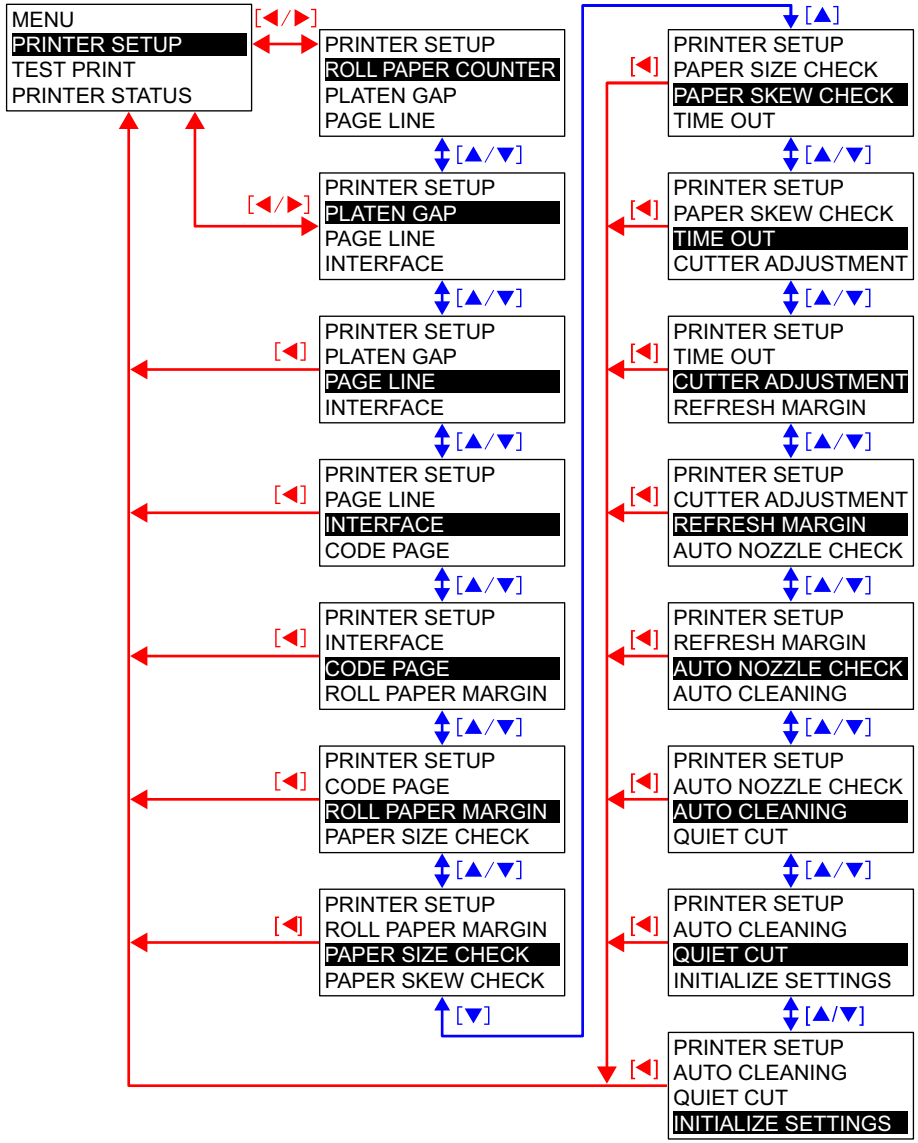

Note : The “Roll paper counter” item appears when REMAINING PPR SETUP in the Maintenance mode has been set to ROLL.

■ Test Print menu

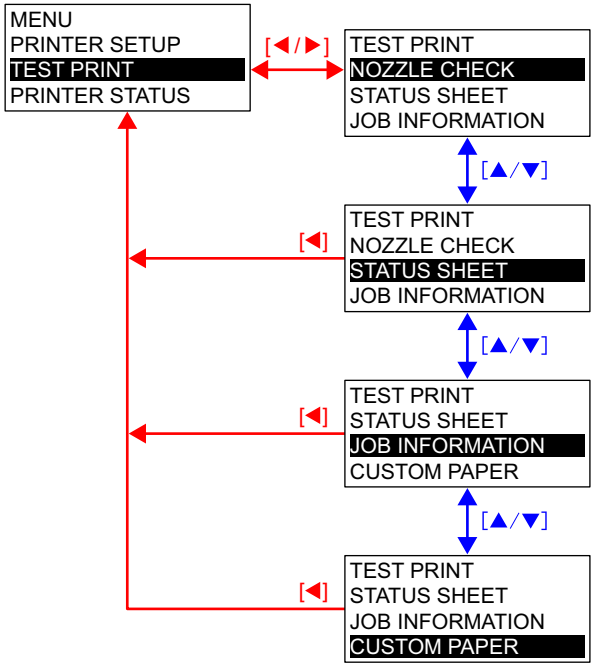

■ Printer Status menu

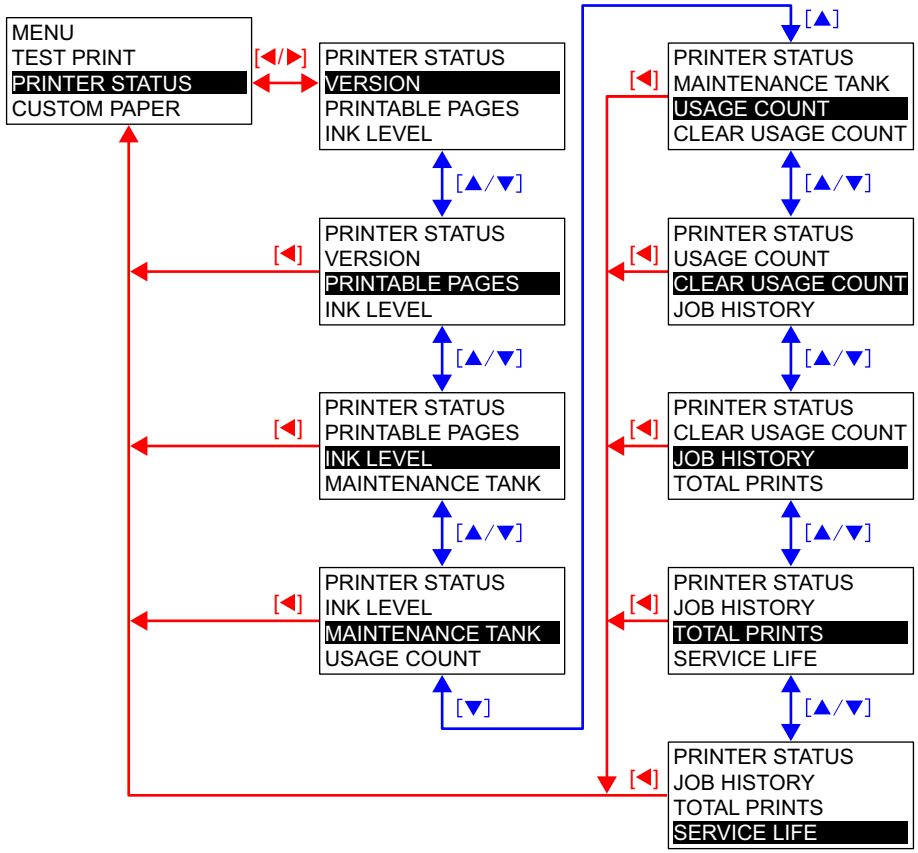

■ Custom Paper menu

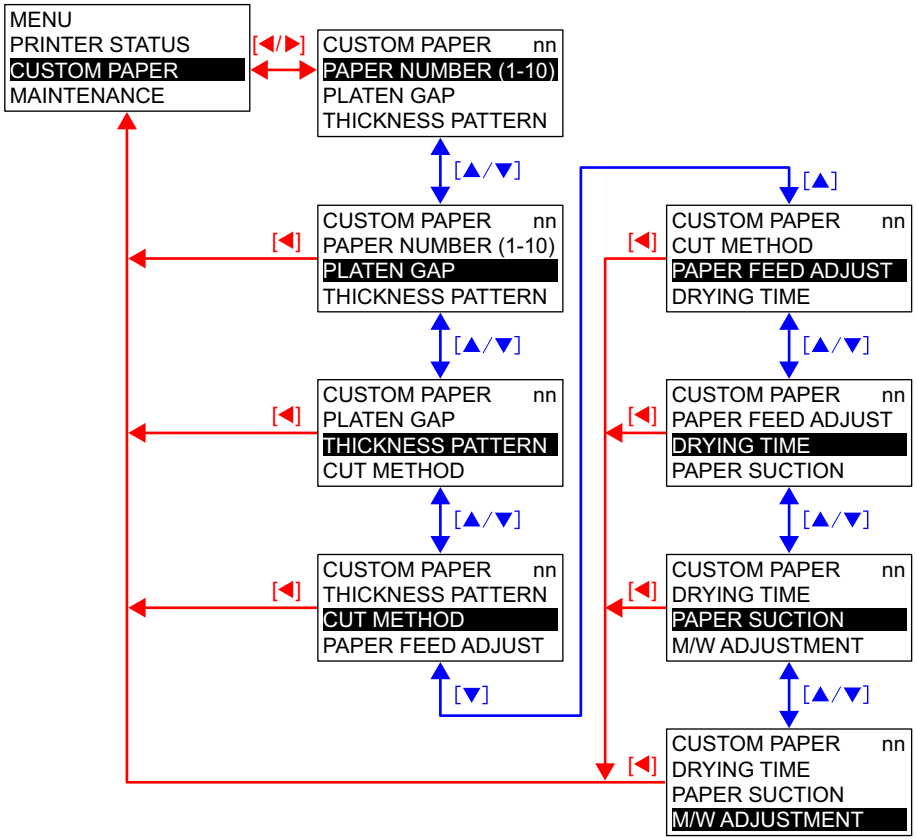

Note : A custom paper number which is currently selected is indicated at the “nn” position. The number does not appear when custom paper is not used.

■ Maintenance menu

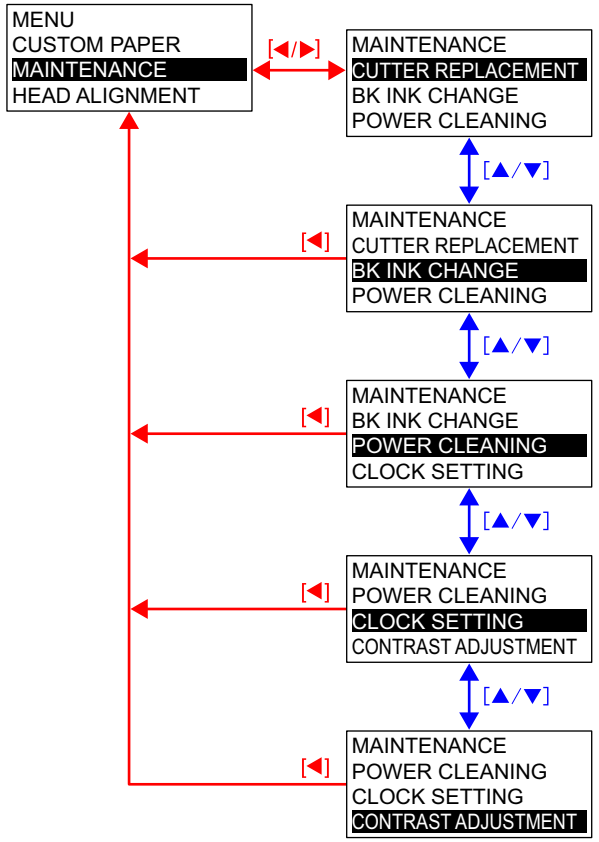

Note : Stylus Pro 7400 and Stylus Pro 9400 are not equipped with the BK Ink Change menu.

■ Head Alignment menu

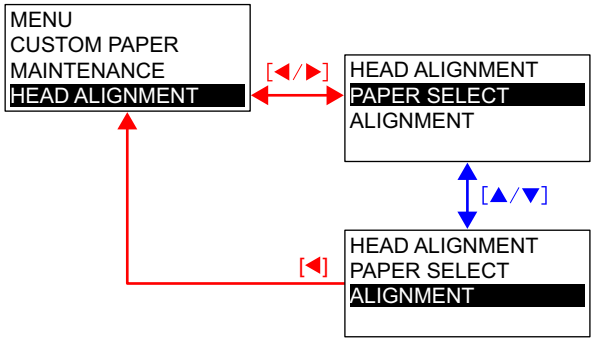

1.4.4.2 Panel Setting Mode Items List

Table 1-37. Panel Setting Mode Items List

Top menu (Panel display)	Item menu	Panel display	Set value (Underline: Default)		Ref.
Printer Setting Menu (PRINTER SETUP)	Remaining paper detection function (Roll paper)	ROLL PAPER COUNTER	ROLL PAPER LENGTH	---, 5.0~**20**~99.5m ---, 15~**60**~300ft	p.61
			ROLL LENGTH ALERT	1~**2**~15m 3~**7**~50ft	
	PG setting	PLATEN GAP	NARROW, **STANDARD**, WIDE, WIDER, WIDEST		p.62
	Page line	PAGE LINE	**ON**, OFF		p.64
	IF switching	INTERFACE	**AUTO**, USB, IEEE1394, OPTIONAL I/F CARD		p.64
	Code Page Switching	CODE PAGE	**PC437**, PC850		p.65
	Roll Paper Margin Setting	ROLL PAPER MARGIN	**DEFAULT**, TOP/BOTTOM 15mm, TOP /BOTTOM 35/15mm, 15mm, 3mm		p.65
	Paper Width Detection	PAPER SIZE CHECK	**ON**, OFF		p.67
	Skew Error Detection	PAPER SKEW CHECK	**ON**, OFF		p.68
	Job Time Out Setting	TIME OUT	**OFF**, 30sec, 60sec, 180sec, 300sec		p.68
	Cutter Position Adjustment	CUTTER ADJUSTMENT	EXEC		p.69
	Auto Margin Refresh	REFRESH MARGIN	**ON**, OFF		p.70
	Auto Nozzle Check Pattern for Each Job	AUTO NOZZLE CHECK	**OFF**, ON		p.70
	Cleaning when nozzle checked	AUTO CLEANING	**ON**, OFF		p.71
	Super Low Speed Cut Mode	QUIET CUT	**OFF**, ON		p.71
	Printer Setup Value Initialization	INITIALIZE SETTINGS	EXEC		p.72
Test Print Menu (TEST PRINT)	Nozzle Check Pattern Print	NOZZLE CHECK	PRINT		p.72
	Status Print	STATUS SHEET	PRINT		p.74
	Job Information Print	JOB INFORMATION	PRINT		p.76
	User Paper Print	CUSTOM PAPER	PRINT		p.78

Continued to next page

Table 1-37. Panel Setting Mode Items List (continued)

Top menu (Panel display)	Item menu		Panel display	Set value (Underline: Default)	Ref.
Printer Status Menu (PRINTER STATUS)	Firmware Version		VERSION	SN0xxxx.ICBS (SW0xxxx.ICBS)	p.79
	Printing Page per Ink Cartridge (Stylus Pro 7800 and Stylus Pro 9800)	1st row	PRINTABLE PAGES	LIGHT LIGHT BLACK xxxxxxPAGES	p.79
		2nd row		LIGHT MAGENTA xxxxxxPAGES	
		3rd row		LIGHT CYAN xxxxxxPAGES	
		4th row		LIGHT BLACK xxxxxxPAGES	
		5th row		PHOTO BLACK (MATTE BLACK) xxxxxxPAGES	
		6th row		CYAN xxxxxxPAGES	
		7th row		MAGENTA xxxxxxPAGES	
		8th row		YELLOW xxxxxxPAGES	
	Remaining Ink Display (Stylus Pro 7400 and Stylus Pro 9400)	1st row	PRINTABLE PAGES	MATTE BLACK xxxxxxPAGES	p.79
		2nd row		MATTE BLACK 2 xxxxxxPAGES	
		3rd row		MAGENTA xxxxxxPAGES	
		4th row		MAGENTA 2 xxxxxxPAGES	
		5th row		CYAN xxxxxxPAGES	
		6th row		CYAN 2 xxxxxxPAGES	
		7th row		YELLOW xxxxxxPAGES	
		8th row		YELLOW 2 xxxxxxPAGES	
	Remaining Ink Display (Stylus Pro 7800 and Stylus Pro 9800)	1st row	INK LEVEL	LIGHT LIGHT BLACK XXXXXXX (XXXXXXX is any of the following) (0%, nn%, E* F, E** F, E*** F, E**** F, E*****F)	p.80
		2nd row		LIGHT MAGENTA XXXXXXX (XXXXXXX is any of the following) (0%, nn%, E* F, E** F, E*** F, E**** F, E*****F)	
		3rd row		LIGHT CYAN XXXXXXX (XXXXXXX is any of the following) (0%, nn%, E* F, E** F, E*** F, E**** F, E*****F)	
		4th row		LIGHT BLACK XXXXXXX (XXXXXXX is any of the following) (0%, nn%, E* F, E** F, E*** F, E**** F, E*****F)	
		5th row		PHOTO BLACK (MATTE BLACK) XXXXXXX (XXXXXXX is any of the following) (0%, nn%, E* F, E** F, E*** F, E**** F, E*****F)	
		6th row		CYAN XXXXXXX (XXXXXXX is any of the following) (0%, nn%, E* F, E** F, E*** F, E**** F, E*****F)	
		7th row		MAGENTA XXXXXXX (XXXXXXX is any of the following) (0%, nn%, E* F, E** F, E*** F, E**** F, E*****F)	
		8th row		YELLOW XXXXXXX (XXXXXXX is any of the following) (0%, nn%, E* F, E** F, E*** F, E**** F, E*****F)	

Continued to next page

Table 1-37. Panel Setting Mode Items List (continued)

Top menu (Panel display)	Item menu		Panel display	Set value (Underline: Default)	Ref.
Printer Status Menu (PRINTER STATUS) (continued)	Remaining Ink Display (Stylus Pro 7400 and Stylus Pro 9400)	1st row	INK LEVEL	MATTE BLACK XXXXXXX (XXXXXXX is any of the following) (0%, nn%, E* F, E** F, E*** F, E**** F, E*****F)	p.80
		2nd row		MATTE BLACK 2 XXXXXXX (XXXXXXX is any of the following) (0%, nn%, E* F, E** F, E*** F, E**** F, E*****F)	
		3rd row		MAGENTA XXXXXXX (XXXXXXX is any of the following) (0%, nn%, E* F, E** F, E*** F, E**** F, E*****F)	
		4th row		MAGENTA 2 XXXXXXX (XXXXXXX is any of the following) (0%, nn%, E* F, E** F, E*** F, E**** F, E*****F)	
		5th row		CYAN XXXXXXX (XXXXXXX is any of the following) (0%, nn%, E* F, E** F, E*** F, E**** F, E*****F)	
		6th row		CYAN 2 XXXXXXX (XXXXXXX is any of the following) (0%, nn%, E* F, E** F, E*** F, E**** F, E*****F)	
		7th row		YELLOW XXXXXXX (XXXXXXX is any of the following) (0%, nn%, E* F, E** F, E*** F, E**** F, E*****F)	
		8th row		YELLOW 2 XXXXXXX (XXXXXXX is any of the following) (0%, nn%, E* F, E** F, E*** F, E**** F, E*****F)	
	Maintenance Tank Count (Stylus Pro 7800 and Stylus Pro 9800)	Left	MAINTENANCE TANK	LEFT XXXXXXX (XXXXXXX is any of the following) (0%, nn%, E* F, E** F, E*** F, E**** F, E*****F)	p.82
		Right		RIGHT XXXXXXX (XXXXXXX is any of the following) (0%, nn%, E* F, E** F, E*** F, E**** F, E*****F)	
	Maintenance Tank Count (Stylus Pro 7400 and Stylus Pro 9400)		MAINTENANCE TANK	XXXXXXX (XXXXXXX is any of the following) (0%, nn%, E* F, E** F, E*** F, E**** F, E*****F)	p.82
	Consumables usage counters	Ink	USAGE COUNT	INK xxxxx.xml	p.82
		Paper		PAPER xxxxx.xcm	
	Clear the usage counters	Ink	CLEAR USAGE COUNT	INK EXEC	p.83
		Paper		PAPER EXEC	
	Job History (10 jobs)		JOB HISTORY	No.0~No.9	p.83
	Total Print Pages		TOTAL PRINT PAGES	nnnnnn (6 digits at maximum) pages	p.84

Continued to next page

Table 1-37. Panel Setting Mode Items List (continued)

Top menu (Panel display)	Item menu		Panel display	Set value (Underline: Default)	Ref.
Printer Status Menu (PRINTER STATUS) (continued)	Commodity Life	Cutter Life	Consumables life	Cutter XXXXXXX (XXXXXXX is any of the following) (0%, nn%, E* F, E** F, E*** F, E**** F, E*****F)	p.84
		CR Motor Life Monitor		CR MOTOR XXXXXXX (XXXXXXX is any of the following) (0%, nn%, E* F, E** F, E*** F, E**** F, E*****F)	p.84
		PF Motor Life Monitor		PF MOTOR XXXXXXX (XXXXXXX is any of the following) (0%, nn%, E* F, E** F, E*** F, E**** F, E*****F)	p.85
		Head Unit Life Monitor		HEAD UNIT XXXXXXX (XXXXXXX is any of the following) (0%, nn%, E* F, E** F, E*** F, E**** F, E*****F)	p.85
		Cleaning Unit Life Monitor		CLEANING UNIT XXXXXXX (XXXXXXX is any of the following) (0%, nn%, E* F, E** F, E*** F, E**** F, E*****F)	p.86
		Pressurization Pump Monitor		PRESSURE MOTOR XXXXXXX (XXXXXXX is any of the following) (0%, nn%, E* F, E** F, E*** F, E**** F, E*****F)	p.86
User Paper Setting Menu (CUSTOM PAPER)	Paper select		PAPER NUMBER (1~10)	**STANDARD**, 1~10	p.87
	PG setting		PLATEN GAP	NARROW, **STANDARD**, WIDE, WIDER, WIDEST	
	Paper Thickness Detection Pattern Print		THICKNESS PATTERN	PRINT	
	Select Paper Thickness Number		THICKNESS NUMBER (1~15)	1~15	
	Select Cutting Method		CUT METHOD	**STANDARD**, THIN PAPER, THICK PAPER and FAST, THICK PAPER and SLOW	
	Paper Feed Adjustment Setting		PAPER FEED ADJUST	-0.70%~**0%**~0.70%	
	Ink Drying Time (Pass delay)		DRYING TIME	**0.0 sec**.~10.0 sec.	
	Paper Suction		PAPER SUCTION	**STANDARD**, -1, -2, -3, -4	
	Print Adjustment (MW)		M/W ADJUTMENT	**STANDARD**, 1, 2	
Maintenance Menu (MAINTENANCE)	Cutter Replacement	Execute sequence	CUTTER REPLACEMENT	EXEC	p.93
		Cover Open	OPEN FRONT COVER TO SEE CUTTER REPLACEMENT LABEL	–	
		Cutter Replacement	SEE LABEL TO REPLACE CUTTER	–	
		Cutter Close	CLOSE FRONT COVER	–	
	K Ink Replacement	Execute Sequence	BK INK CHANGE	EXEC	p.94
	Powerful Cleaning		POWERFUL CLEANING	EXEC	p.94
	Date Setting		DATE SETTING	YY/MM/DD HH:MM	p.94
	Contrast Adjustment		CONTRAST ADJUSTMENT	-20[dec]~**0**~+20[dec]	p.94

Continued to next page

Table 1-37. Panel Setting Mode Items List (continued)

Top menu (Panel display)	Item menu	Panel display	Set value (Underline: Default)				Ref.
Gap Adjustment Menu (GAP ADJUSTMENT)	Paper Thickness (in 0.1mm units) *1	PAPER THICKNESS	**STANDARD**, 0.1mm~1.5mm				*p.95*
	Select and Print Adjustment Pattern	ALIGNMENT	AUTO	UNI-D			
				BI-D 2 COLOR			
				BI-D ALL			
				BI-D #1			
				BI-D #2			
				BI-D #3			
			MANUAL	UNI-D	#1 C	1~**5**~9	
					:	:	
					#1 LLK	1~**5**~9	
					#2 C	1~**5**~9	
					:	:	
					#2 LLK	1~**5**~9	
					#3 C	1~**5**~9	
					:	:	
					#3 LLK	1~**5**~9	
				BI-D 2 COLOR	#1 LC	1~**5**~9	
					#1 LM	1~**5**~9	
					#2 LC	1~**5**~9	
					#2 LM	1~**5**~9	
					#3 LC	1~**5**~9	
					#3 LM	1~**5**~9	
				BI-D 2 COLOR	#1 C	1~**5**~9	
					#1 M	1~**5**~9	
					#2 C	1~**5**~9	
					#2 M	1~**5**~9	
					#3 C	1~**5**~9	
					#3 M	1~**5**~9	

Continued to next page

Table 1-37. Panel Setting Mode Items List (continued)

Top menu (Panel display)	Item menu	Panel display	Set value (Underline: Default)				Ref.
Gap Adjustment Menu (GAP ADJUSTMENT) (continued)	Select and Print Adjustment Pattern (continued)	ALIGNMENT (continued)	MANUAL (continued)	BI-D ALL	#1 MK/PK	1~**5**~9	p.95
					:	:	
					#1 LLK	1~**5**~9	
					#2 MK/PK	1~**5**~9	
					:	:	
					#2 LLK	1~**5**~9	
					#3 MK/PK	1~**5**~9	
					:	:	
					#3 LLK	1~**5**~9	
				BI-D ALL	#1 C	1~**5**~9	
					:	:	
					#1 M2	1~**5**~9	
					#2 C	1~**5**~9	
					:	:	
					#2 M2	1~**5**~9	
					#3 C	1~**5**~9	
					:	:	
					#3 M2	1~**5**~9	

1.4.4.3 Roll Paper Counter

This menu appears when REMAINING PPR SETUP in the Maintenance mode has been set to ROLL. The menu allows you to specify the length of roll paper within the range from 15 ft. (5.0 m) to 300 ft. (99.5 m) in increments of 1 ft. (0.5 m) using the [Paper Feed ▼ (▲)] buttons. If you hold down one of the buttons for two seconds, the length is increased or decreased in 10 ft. (10 m) increments.

Roll Paper Counter Menu

■ Setting the Length of Roll Paper

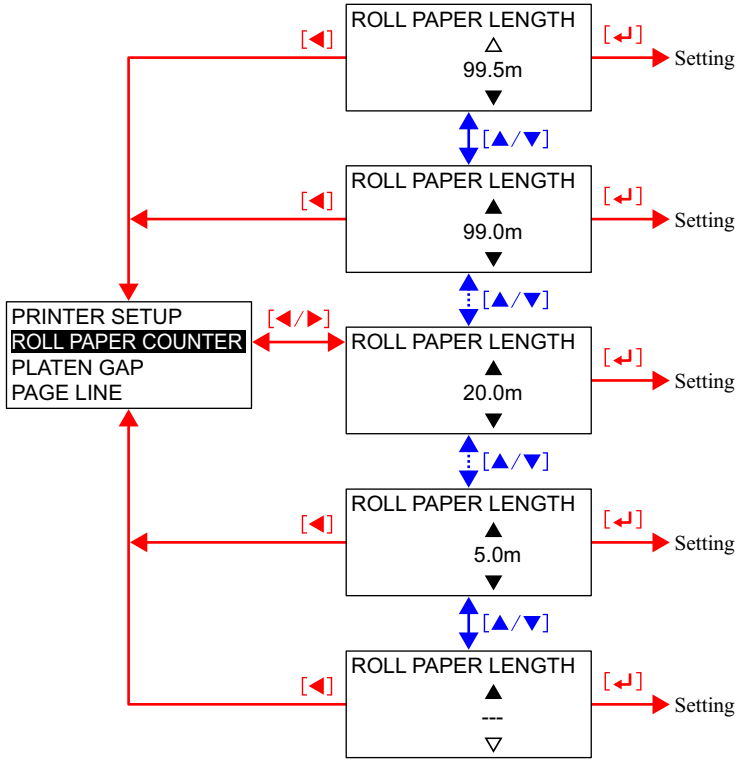

Note 1: If the unit is changed, the roll paper length setting and the Roll Paper Counter are reset to their default.

■ Setting the Warning Length of Roll Paper

When the Roll Paper length is set, an asterisk (*) is displayed beside the set value for two seconds and then the Roll Length Alert screen appears. The alert menu allows you to set a length to be informed as a warning when remaining length of roll paper becomes the set value. It can be set within the range from 3 ft. (15 m) to 50 ft. (15 m) in 1 ft. (1 m) increments.

When the alert setting is accepted, an asterisk (*) appears beside the set value for two seconds and then the screen returns to the Printer Setup menu screen.

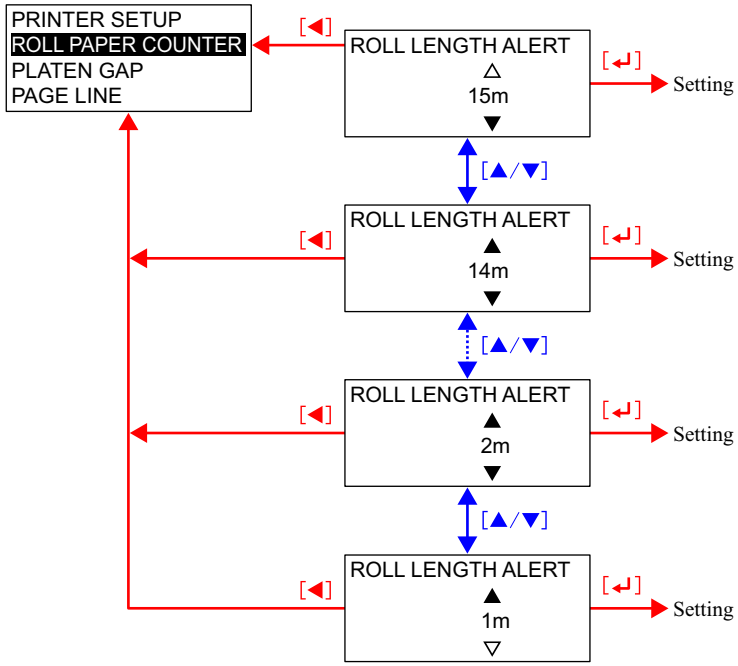

Note 1: If the unit is changed, the roll paper length setting and the Roll Paper Counter are reset to their default.

1.4.4.4 Platen Gap

This function allows you to select a gap between the printhead and paper (platen) from the five options (narrow, standard, wide, wider, widest). The platen gap set in the Custom Paper menu for the user-defined paper type (other than standard) has the higher priority than that made by this Platen Gap menu. If, however, the paper thickness sensor detects the paper as over 0.81mm, the platen gap is automatically set to the Widest. The table below shows the details of the five option.

Table 1-38. Platen Gap Settings

Paper thickness sensor	PH command	Panel	SN command: m2		Actual PG location (mm)	
0.3mm or less	00H*-08H	Narrow	Minimum	04	Minimum	0.8
			Small	03	Minimum	0.8
			Middle	02	Small	1.2
			Big	01	Middle	1.6
			Maximum	05	Big	2.1
		Standard	Minimum	04	Minimum	0.8
			Small	03	Small	1.2
			Middle	02	Middle	1.6
			Big	01	Big	2.1
			Maximum	05	Maximum	2.6
		Wide*	Minimum	04	Small	1.2
			Small	03	Middle	1.6
			Middle	02	Big	2.1
			Big	01	Maximum	2.6
			Maximum	05	Maximum	2.6
		Wider*	Minimum	04	Middle	1.6
			Small	03	Big	2.1
			Middle	02	Maximum	2.6
			Big	01	Maximum	2.6
			Maximum	05	Maximum	2.6
		Widest	Minimum	04	Big	2.1
			Small	03	Maximum	2.6
			Middle	02	Maximum	2.6
			Big	01	Maximum	2.6
			Maximum	05	Maximum	2.6
	09H-10H	---	---	---	Maximum	2.6

Table 1-38. Platen Gap Settings

Paper thickness sensor	PH command	Panel	SN command: m2		Actual PG location (mm)	
0.3mm or more 0.8mm or less	00H-08H	Narrow	Minimum	04	Small	1.2
			Small	03	Small	1.2
			Middle	02	Small	1.2
			Big	01	Middle	1.6
			Maximum	05	Big	2.1
		Standard	Minimum	04	Small	1.2
			Small	03	Small	1.2
			Middle	02	Middle	1.6
			Big	01	Big	2.1
			Maximum	05	Maximum	2.6
		Wide*	Minimum	04	Small	1.2
			Small	03	Middle	1.6
			Middle	02	Big	2.1
			Big	01	Maximum	2.6
			Maximum	05	Maximum	2.6
		Wider*	Minimum	04	Middle	1.6
			Small	03	Big	2.1
			Middle	02	Maximum	2.6
			Big	01	Maximum	2.6
			Maximum	05	Maximum	2.6
		Widest	Minimum	04	Big	2.1
			Small	03	Maximum	2.6
			Middle	02	Maximum	2.6
			Big	01	Maximum	2.6
			Maximum	05	Maximum	2.6
	09H-12H	---	---	---	Maximum	2.6
0.81mm or more	---	---	---	---	Maximum	2.6

Note "*": Only in this case, SN command is ignored. When paper thickness is 0.15mm, it is operated with minimum Bi-D value and minimum SN (PG).

Note : The platen setting is automatically reset at power-OFF and returns to the “Standard” (default) when the printer is turned ON.

The following 5 positions are available in the actual platen gap setting.

Table 1-39. Actual Platen Gap Setting

Position	Gap width	Use
Maximum	2.6mm	For thick paper
Big	2.1mm	Reduce the smearing on the printed image of thin paper.
Middle	1.6mm	For certain easy-rubbed thin paper (Default)
Small	1.2mm	For thin paper (Default)
Minimum	0.8mm	For thin film (Film, glossy media)

☐ Platen Gap Determining Sequence

The following flowchart shows the sequence to determine the platen gap.

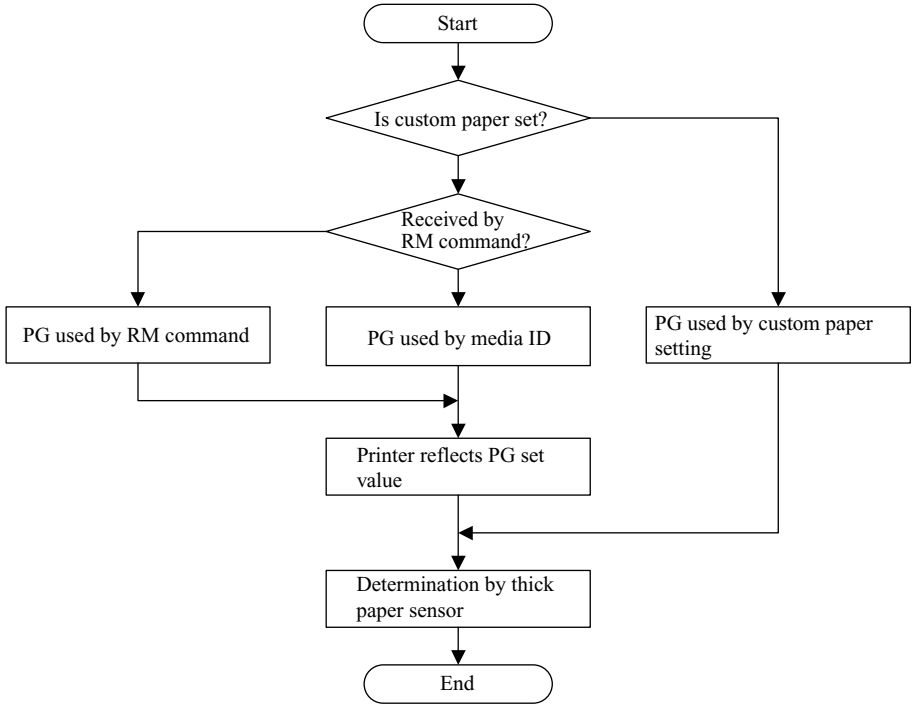

☐ Platen Gap Setting menu

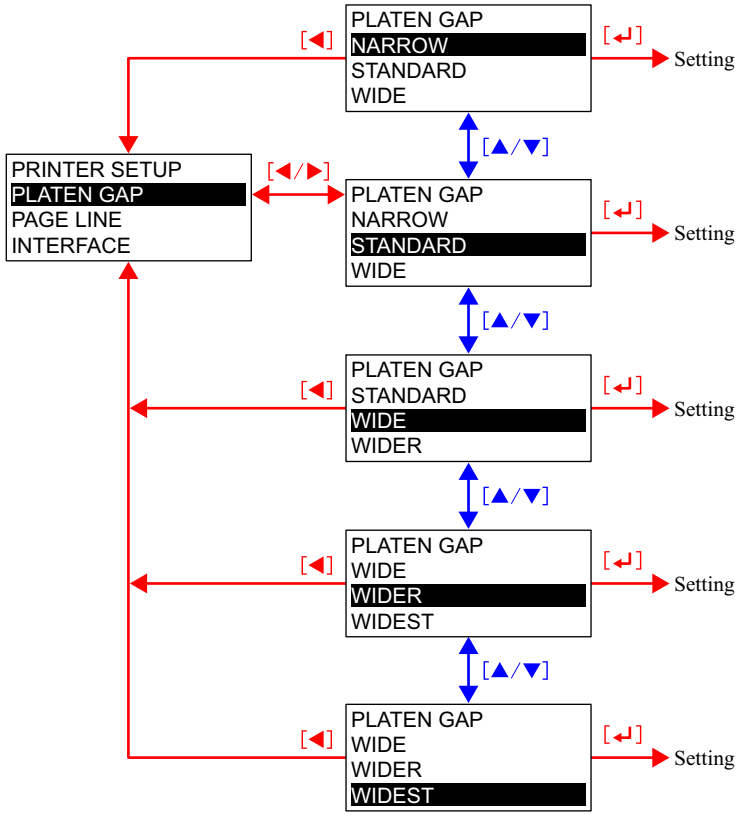

1.4.4.5 Page Lines

This menu allows you to print or not print a page lines (cutoff lines). The page line, a black solid line with 1 dot width, cannot be printed on cut sheet media (only for roll paper). This setting, however, is ignored when a print job is made by the printer driver (printer driver settings has the priority). If the paper width setting of the printer driver is narrower than that of roll paper loaded on the printer, a vertical page line is printed on the paper as the right edge of the paper size specified by the driver.
The page line is printed in the same resolution with the image.

NOTE: *The vertical page line is not printed when the print job is sent without specifying the paper size (horizontal page lines can be printed.)*

☐ Page Line menu

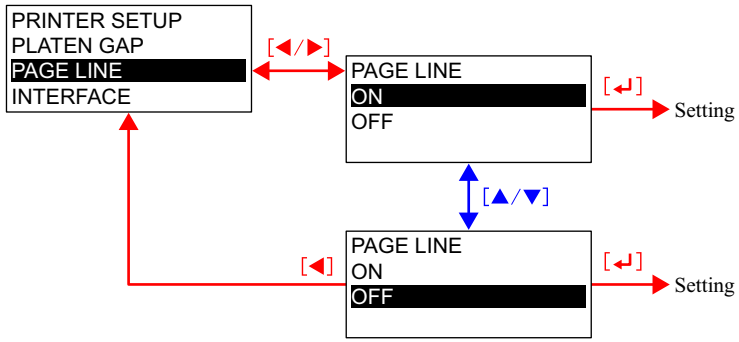

1.4.4.6 Interface

This menu allows you to switch the interface setting between auto-detection, USB, IEEE1394, and optional interface.

☐ Interface menu

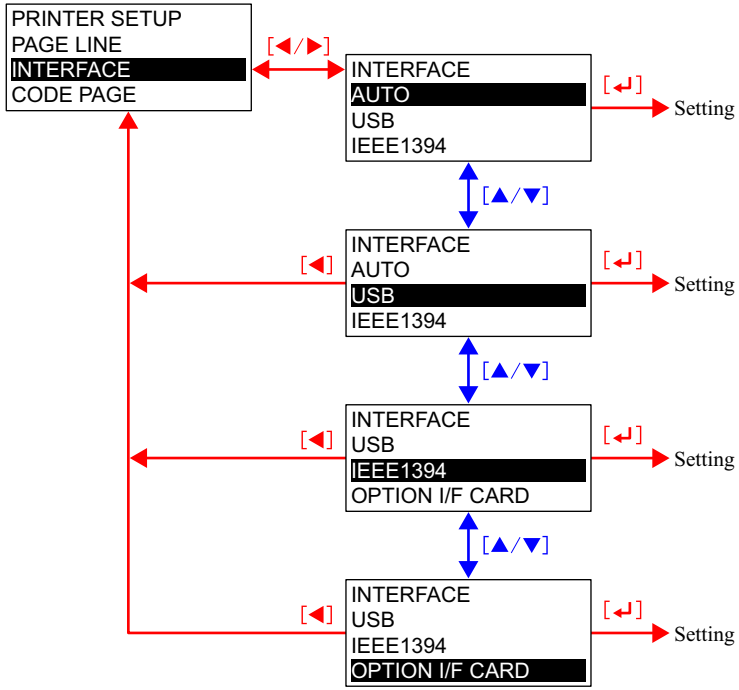

1.4.4.7 Code Page

The Code Page for the printer can be switched between PC437 (extended graphics) and PC850 (multilingual).

☐ Code Page menu

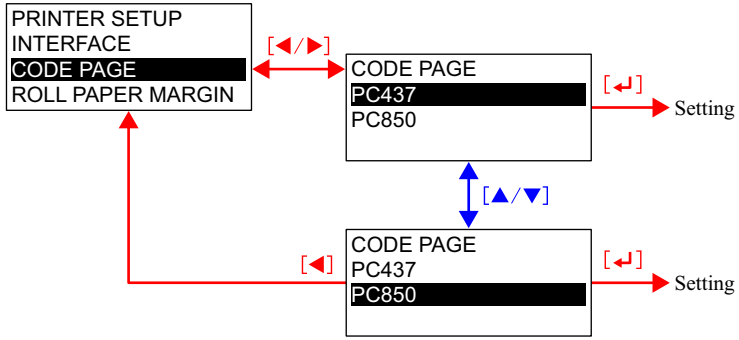

1.4.4.8 Roll Paper Margin

Margin setting for roll paper can be selected from the following settings:

- **DEFAULT**: Left/Right=3 mm. Top and bottom are depends on media type
- **TOP/BOTTOM 15 mm**: Left/Right=3 mm, Top/Bottom=15 mm
- **TOP 35/BOTTOM 15 mm**: Left/Right=3 mm, Top=35 mm, Bottom=15 mm
- **15 mm**: 15 mm for all four sides.
- **3 mm**: 3 mm for all four sides.

Note that the margins specified by this setting are created without reducing or enlarging image size.

- When "3 mm" is selected
  Vertical and horizontal page lines are printed along the specified page size.
- When "15mm", or "Top/Bottom15mm" is selected
  Vertical and horizontal page lines are printed along a line 12 mm outside of all four edges or top and bottom edges of the specified page size.
  See "Fig 1-10 Roll Paper Margin (1)" *(p.65)*.
- When "TOP 35/BOTTOM 15 mm" is selected
  Vertical and horizontal page lines are printed along a line 12 mm outside of the top edge of the specified page size.
  See "Fig 1-10 Roll Paper Margin (1)" *(p.65)*.

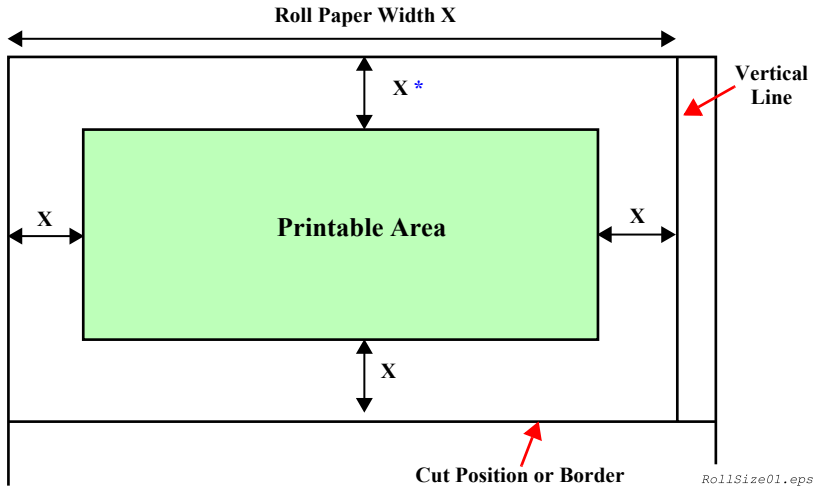

Figure 1-10. Roll Paper Margin (1)

If the width of image is larger than that of the specified printable area, the extended width of the image is clipped off from its right side. In such case, a vertical page line is not printed.

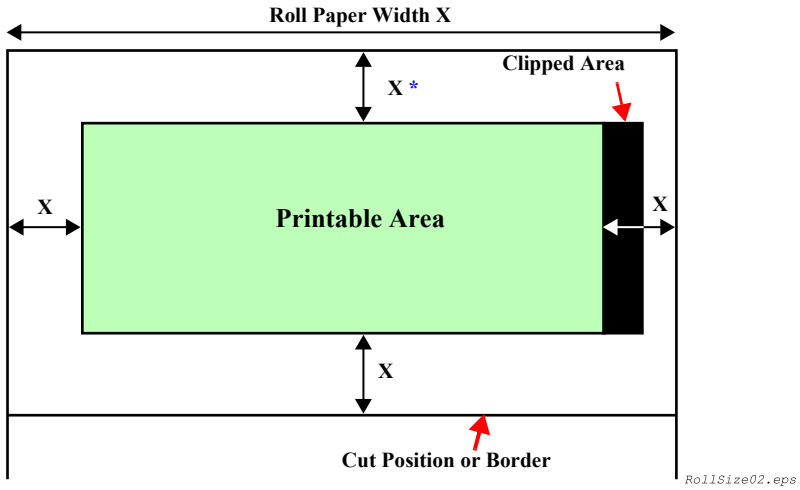

Figure 1-11. Roll Paper Margin (2)

Note "*": Top margin of roll paper can be set with "Set the paper top margin" (SN command). When the printer receives the command, it determines the top margin as follows:

- When the "Roll Paper Margin" is set to other than Default
  The printer creates a top margin according to the panel setting.
- When the "Roll Paper Margin" is set to Default
  The printer creates a top margin according to the SN command.
  If a top margin information is not included in the SN commands, the printer adopts the default top margin setting.

Note 1: Using the Borderless Print function, left and right margins can be set to 0.

2: When the following patterns are printed, left and right margins are fixed to 3mm.

Adjustment Patterns	Menu	Command
Nozzle Check Pattern	Test Printing Menu	NC Command
Auto Nozzle Check Pattern	↑	↑
Status Print	↑	SS Command
Job Information Print	↑	↑
User Paper Print	↑	↑
Paper Thickness Detection Pattern	User Paper Setting Menu	↑
Cutter Position Adjustment	PRINTER SETUP	↑
Auto Nozzle Check for each job	↑	↑
Manual Uni-D	GAP Adjustment Menu	DT/DC Command
Manual Bi-D K	↑	↑
Manual Bi-D	↑	↑
F/W ROM Version Print	---	VI Command

☐ Roll Paper Margin menu

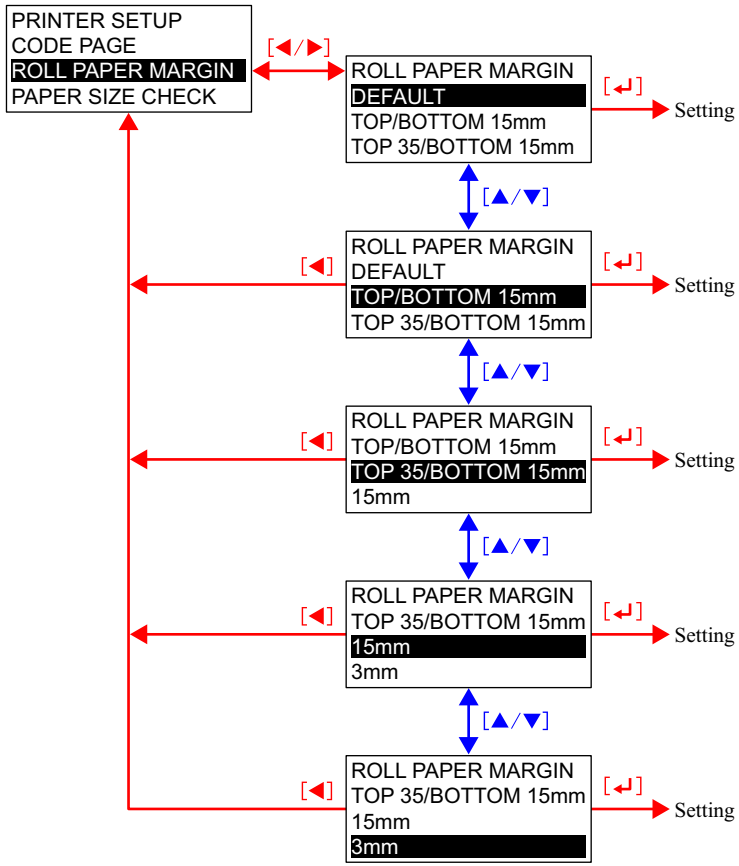

1.4.4.9 Page Size Check

The printer automatically detects the width of loaded media if this function is set to ON. Disabling this (setting it to OFF) is not recommended especially when performing a Borderless printing because the printer performs a print job even if the specified print size (width) is bigger than the width of the loaded paper and result in printing directly on the platen.
When paper initializing or print starting, for distance between grid roller and #1 nozzle, paper is fed unconditionally. The print starts from the position. (No back-feed with other sequences) Although the paper that is under grid roller will be wasteful, place emphasis on printing even for low reflection paper.
Cut sheets and auto loading have same specification.
The above paper width detection OFF sequence is just for the first page in case of roll paper. Paper auto cutting is not checked whether it cuts off or not.
If this function is set to OFF, the Paper Skew Check for a cut sheet at the time it is loaded is not performed.

☐ Paper Size Check menu

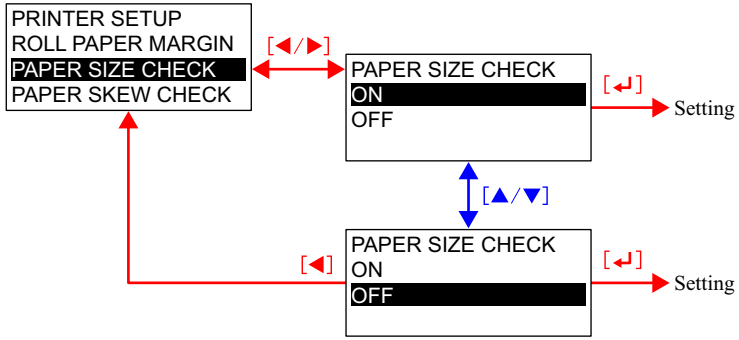

1.4.4.10 Paper Skew Check

When this is set to “ON”, the printer automatically detects that a paper is loaded or fed at an angle and causes a paper skew error. If this is set to OFF, the error does not occur and printing is continued even if the paper is loaded at an angle or skewed during printing causing a off-paper printing. Although this menu is disabled when “cut sheet” is selected as paper source, the printer can detect a skewed cut sheet when starting printing if the Paper Size Check function is set to ON. If a cut sheet is skewed during printing, however, it cannot be detected.

☐ Paper Skew Check menu

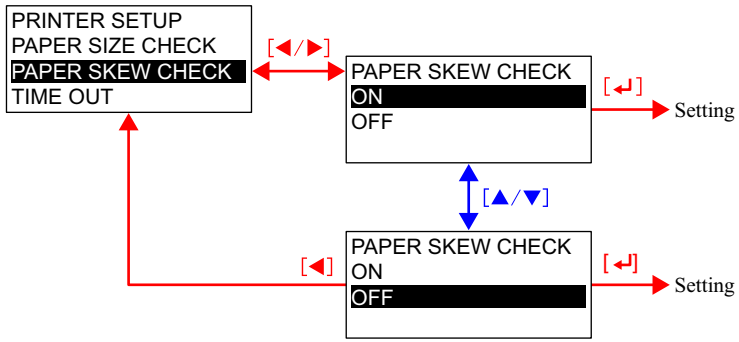

1.4.4.11 Time Out

This menu allows you to select a time period for job time out from five options. When a transmission of print job from the host is interrupted for the set time period, the printer judges that the job is finished and ejects the paper.
This setting is ignored when the host sends a duplex print job with the interface specified.

☐ Time Out menu

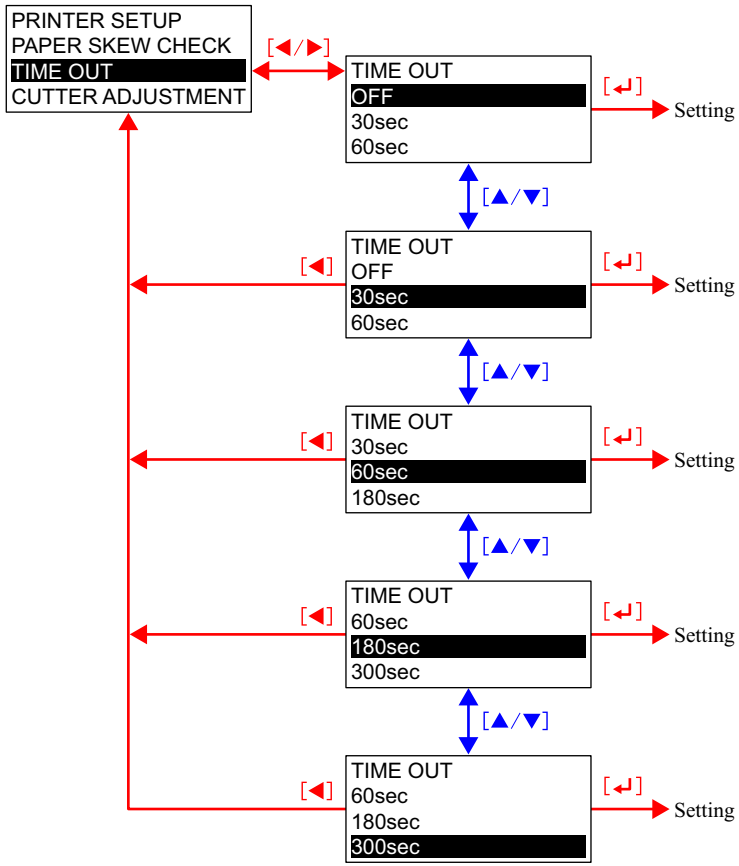

1.4.4.12 Cutter Adjustment

This menu is provided to adjust a position to cut top and bottom edges of media to produce a full-bleed print on all four sides (Borderless print). So, the menu is enabled only when the “Roll Auto Cut ON” is selected as paper source.
When you press the [Enter] button with the EXECUTE highlighted, the printer prints a cutter position adjustment pattern and cuts the pattern at its center. The adjustment can be made simply by entering a number printed with the most accurately cut block pattern into the entry screen.

If you select this menu with the paper source set to other than the “Roll Auto Cut ON”, the printer stops to operate displaying a message "Commanded Function Can Not Be Executed” for three seconds, and then returns to the Printer Setup menu screen.

☐ Cutter position adjustment pattern

The pattern is comprised of 17 two-toned blocks as shown in the figure below. The blocks of exactly the same size are neatly aligned and the boundary of the two colors on them is slightly shifted by each block. They are cut off at their horizontal center. The difference in color between the upper and lower portions of each block makes it easier to find out which one is most accurately cut on the boundary of the two colors.

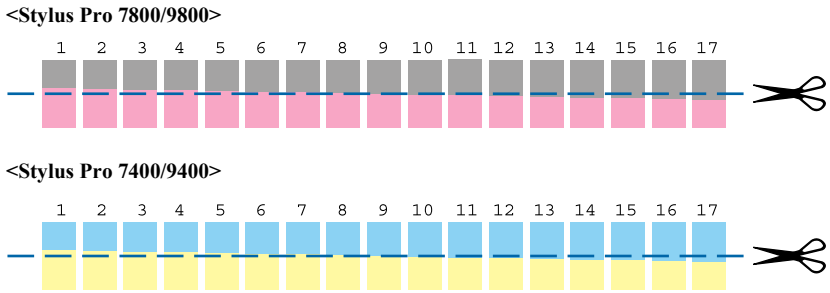

Figure 1-12. Cutter position adjustment pattern

☐ Cutter Adjustment menu

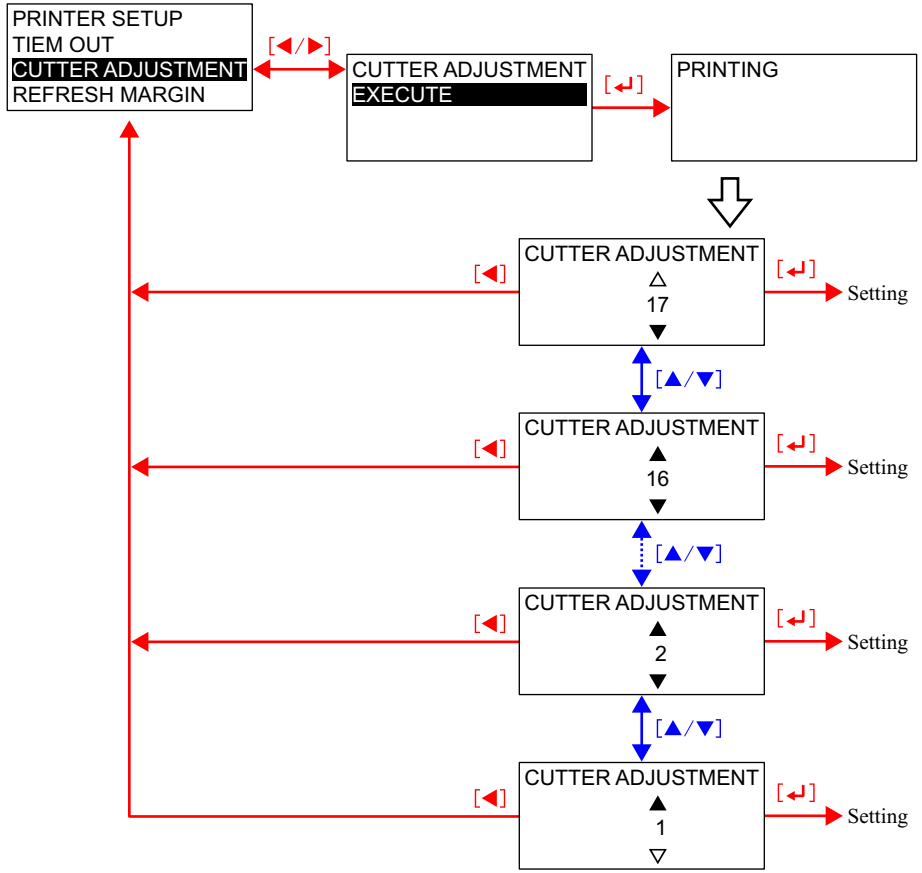

1.4.4.13 Refresh Margin

This function is used to feed paper by the amount of “minimum cut length” and cut it before starting the next print job after making a 4-side borderless print. Ink smudges or printed image left on the top edge of the paper due to the 4-side borderless printing are cut off to “refresh” the top edge for the next job.

☐ Refresh Margin menu

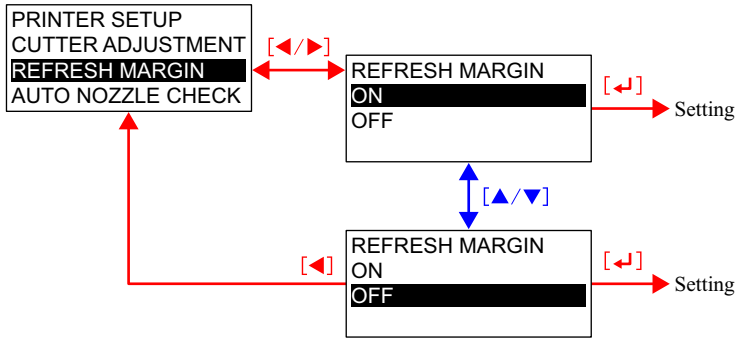

1.4.4.14 Auto Nozzle Check

The printer automatically checks nozzles for clogging before starting each print job when this is set to ON with the “1.4.4.15 Auto Cleaning” *(p.71)* also set to ON. This function is useful when performing a lot of print jobs taking many hours or a day and the user has no time to check the nozzle clogging.
A JS command triggers the “Auto Nozzle Check”. The printer does not perform the check if the print job does not include the JS command. When the printer runs out of paper at the time of the “Auto Nozzle Check”, it causes “Paper Out” error and waits paper for being loaded.

☐ Auto Nozzle Check menu

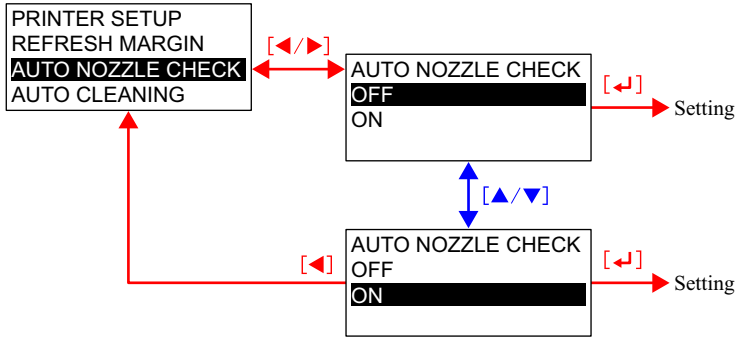

1.4.4.15 Auto Cleaning

The printer automatically runs a head cleaning when this is set to ON. If the "Auto Nozzle Check" is also set to ON, the printer prints an Auto Nozzle Check pattern to examine the pattern and runs the cleaning depending on the result before starting each job. If you perform the Nozzle Check function in the TEST PRINT of the Panel Setting menu with the Auto Cleaning set to ON, the automatic cleaning sequence; printing an Auto Nozzle Check pattern, examining the pattern, and running a head cleaning, is performed. If the Auto Cleaning is set to OFF when you conduct the Nozzle Check, a pattern for manual nozzle check is printed. When performing the Nozzle Check using the printer driver or utility, automatic cutting operation after printing the check pattern is performed according to the Auto Cut setting of the printer.

NOTE: *If the width of media loaded in the printer is smaller than that of A4-size, the Auto Nozzle Check pattern is printed but not examined automatically.*

Table 1-40. Nozzle Check and Cleaning Settings

Auto Cleaning	Nozzle Check	Nozzle Check in Test Print menu	Auto Nozzle Check Before Each Job	Nozzle Check by command "NC" m1 = 80h
OFF	OFF	Manual	None	Manual
ON	OFF	Auto	None	Auto
OFF	ON	Manual	None	Manual
ON	ON	Auto	Execute	Auto

☐ Auto Cleaning menu

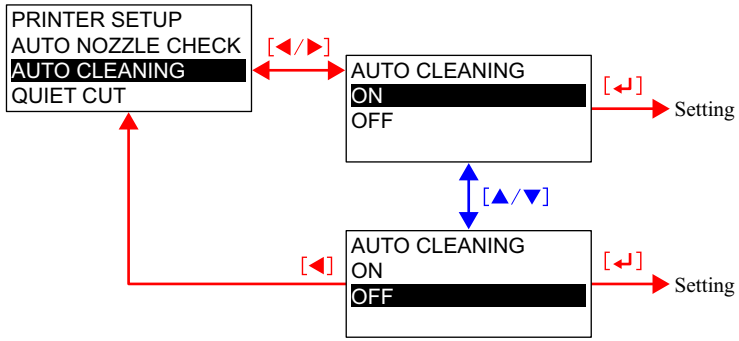

1.4.4.16 Quiet Cut

The "Quiet Cut" enables the slowest cutting mode (20 CPS). The default is OFF. This is effective to cut thick media and reduces cutting noise and paper dust.
For cutting operation to create a 4-side borderless print, however, this setting cannot be used because the slower the cutting speed is the more likely to cause off-registration.

☐ Quiet Cut menu

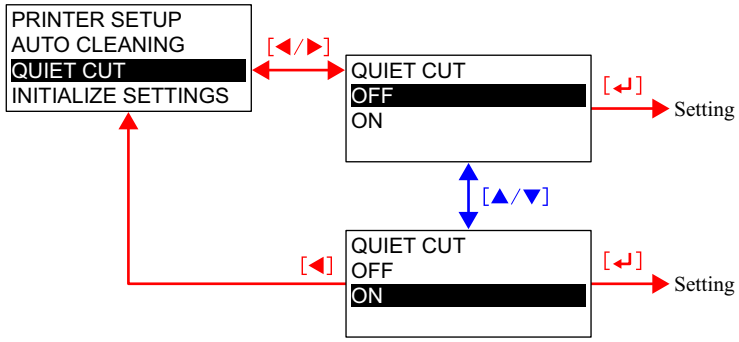

1.4.4.17 Initialize Settings

This function allows you to return all settings in the PRINTER SETUP menu to their default except the Roll Paper Counter (both the roll paper settings and the usage counter).
The table below shows the target setting items and their default.

Table 1-41. Printer Setup Value Initialization

Setting Item	After Initialization
PLATEN GAP	STANDARD
PAGE LINE	ON
INTERFACE	AUTO
CODE PAGE	PC437
ROLL PAPER MARGIN	DEFAULT
PAPER SIZE CHECK	ON
PAPER SKEW CHECK	ON
TIME OUT	OFF
CUTTER ADJUSTMENT	(Manufacture setting)
REFRESH MARGIN	ON
AUTO NOZZLE CHECK	ON
AUTO CLEANING	ON
QUIET CUT	OFF

☐ Initialize Settings menu

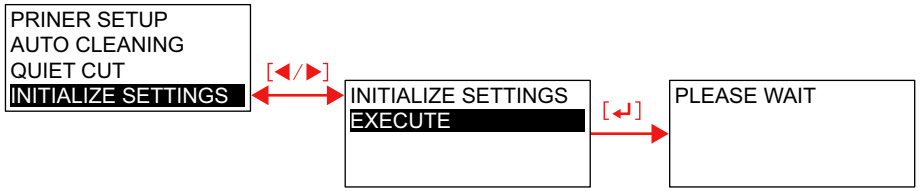

1.4.4.18 Printing Nozzle Check Pattern (Test Print Menu)

The nozzle check pattern printed by executing the Nozzle Check in the TEST PRINT menu has two types; one for automatic checking and the other one for manual checking. Switching between the automatic and manual nozzle checking is made by the Auto Cleaning setting. Both patterns are printed with the following information; the firmware version, available capacity of the Maintenance Tank, and usage counters for paper and ink.

☐ Auto Nozzle Check pattern.

- Order of colors (Stylus Pro 7800 and Stylus Pro 9800: from left)
  Photo Black / Matte Black→Cyan→Magenta→Yellow→Light Light Black→Light Magenta→Light Cyan→Light Black

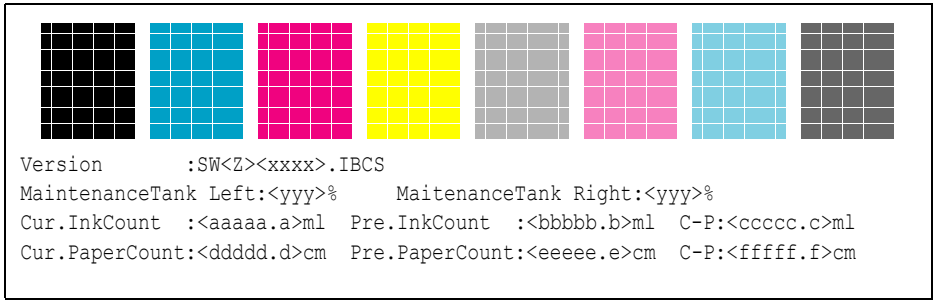

Figure 1-13. Auto Nozzle Check Pattern (Stylus Pro 9800)

- Order of colors (Stylus Pro 7400 and Stylus Pro 9400: from left)
  Matte Black→Cyan→Magenta→Yellow→Matte Black→Cyan→Magenta→Yellow

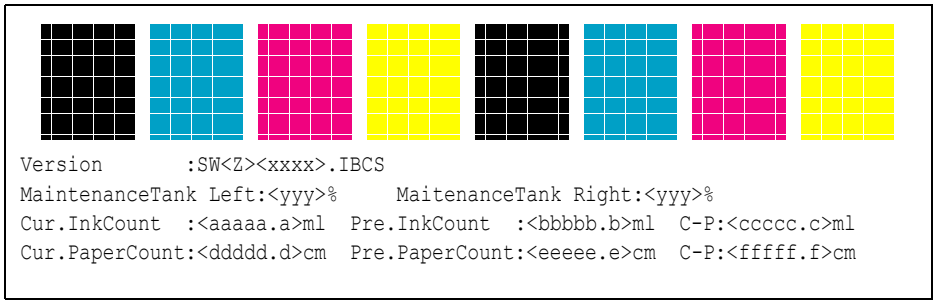

Figure 1-14. Auto Nozzle Check Pattern (Stylus Pro 9400)

- Manual Nozzle Check pattern
  - Order of colors (Stylus Pro 7800 and Stylus Pro 9800: from left)
    Light Light Black→Light Magenta→Light Cyan→Light Black→Photo Black / Matte Black→Cyan→Magenta→Yellow

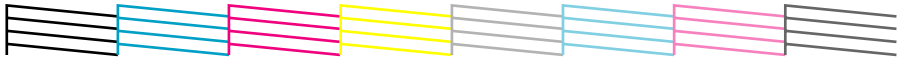

```
Version        :SW<Z><xxxx>.IBCS
MaintenanceTank Left:<yyy>%     MaitenanceTank Right:<yyy>%
Cur.InkCount  :<aaaaa.a>ml  Pre.InkCount  :<bbbbb.b>ml  C-P:<ccccc.c>ml
Cur.PaperCount:<ddddd.d>cm  Pre.PaperCount:<eeeee.e>cm  C-P:<fffff.f>cm
```

Figure 1-15. Manual Nozzle Check Pattern (Stylus Pro 9800)

  - Order of colors (Stylus Pro 7400 and Stylus Pro 9400: from left)
    Matte Black x 2→Magenta x 2→Cyan x 2→Yellow x 2

```
Version        :SW<Z><xxxx>.IBCS
MaintenanceTank:<yyy>%
Cur.InkCount  :<aaaaa.a>ml  Pre.InkCount  :<bbbbb.b>ml  C-P:<ccccc.c>ml
Cur.PaperCount:<ddddd.d>cm  Pre.PaperCount:<eeeee.e>cm  C-P:<fffff.f>cm
```

Figure 1-16. Manual Nozzle Check Pattern (Stylus Pro 9400)

- Explanation of information printed under the pattern
  - <Z>: 0 (other than “0” indicates special specification)
  - <xxxx>: Firmware version
  - I: Number of colors (four or eight) used for printing
  - B: Business system setting
  - C: Custom version setting
  - S: Development stage
  - <yyy>: Available space in the Maintenance Tank
  - <aaaaa.a>: Ink consumption counter detected immediately before printing the pattern. (5.1-digit)
  - <bbbbb.b>: Ink consumption counter detected immediately before printing the previous pattern. (5.1-digit)
  - <ccccc.c>: Value obtained by subtracting <bbbbb.b> from <aaaaa> (5.1-digit)
  - <ddddd.d>: Paper consumption counter detected immediately before printing the pattern (5.1-digit)
  - <eeeee.e>: Paper consumption counter detected immediately before printing the previous pattern (5.1-digit)
  - <fffff.f>: Value obtained by subtracting <eeeee.e> from <ddddd.d>. (5.1-digit)

NOTE
- *“-” is printed instead of ink or paper counter value if the corresponding value does not exits.*
- *When printing the check pattern on Premium Glossy Photo Paper or Premium Semigloss Photo Paper, the top margin is automatically set to 20 mm regardless of the margin setting made by the panel setting menu to ensure proper print of the pattern.*

1.4.4.19 Printing Status Sheet

The “Status Sheet” in the TEST PRINT menu allows you to print a Status Sheet (a list of information on current panel settings and ink cartridges).
The following two items are required to print the sheet.

- Print paper size: A4
- Font: Built-in font (Print all in alphanumeric characters)

☐ Procedure:

1. Press the [Menu ▶] button on the control panel to enter the panel setting menu.
2. Press the [Paper Feed ▼] to display "TEST PRINT” menu.
3. Press the [Menu ▶] button to select the “TEST PRINT” and highlight the “STATUS SHEET” using the [Paper Feed ▼] button.
4. Press the [Menu ▶] button again to select “PRINT”.
5. Press the [Enter ↵] button to execute status sheet printing.

```
Type B            :  Installed
- Current Setting +-----------------+- Printer Status -+----------------
Platen Gap        :Standard         |Version           :SW0xxxx.IBCS
Page Line         :On               |Total Prints      :xxxxxx PG
Interface         :Auto             |Use Ink           :xxxxxx.xml
Code Page         :PC437            |Use Paper         :xxxxxx.xcm
Margine           :Default          |Mainte Tank Left  :E[*****]F
Paper Size Check  :ON               |Mainte Tank Right :E[*****]F
Paper Align Check :ON               |Cutter Life       :E[*****]F
Time Out          :30sec            |CR Motor          :E[*****]F
Refresh Margin    :ON               |PF Motor          :E[*****]F
Auto Nozzle Check :OFF              |Head              :E[*****]F
Auto Cleaning     :ON               |Cleaner           :E[*****]F
Quiet Cut         :OFF              |Pressure Motor    :E[*****]F
- Ink Cartridge --+-----------------+------------------+-----------------
Manufacturer      :INK by EPSON      INK by EPSON       INK by EPSON
Ink Type          :     Pigment           Pigment           Pigment
Ink Color         : Light Light Black   Light Magenta      Light Cyan
Ink Capacity      :      110ml             110ml             110ml
Ink Left          :    E[*****]F         E[*****]F         E[*****]F
Production Date   :     `02/03            `02/03            `02/03
Expire Date       :     `03/10            `03/10            `03/10
Ink Life          :       6 month           6 month           6 month
Passed            :       2 month           2 month           2 month
Printable Sheet   :    120 pages         120 pages         120 pages
------------------+------------------+-----------------+-----------------
Manufacturer      :INK by  EPSON      INK by  EPSON     INK by EPSON
Ink Type          :     Pigment           Pigment           Pigment
Ink Color         :   Light Black        Photo Black         Cyan
Ink Capacity      :      110ml             110ml             110ml
Ink Left          :    E[*****]F         E[*****]F         E[*****]F
Production Date   :     `02/03            `02/03            `02/03
Expire Date       :     `03/10            `03/10            `03/10
Ink Life          :       6 month           6 month           6 month
Passed            :       2 month           2 month           2 month
Printable Sheet   :    120 pages         120 pages         120 pages
------------------+------------------+-----------------+-----------------
Manufacturer      :INK by  EPSON      INK by  EPSON
Ink Type          :     Pigment           Pigment
Ink Color         :     Magenta           Yellow
Ink Capacity      :      110ml             110ml
Ink Left          :    E[*****]F         E[*****]F
Production Date   :     `02/03            `02/03
Expire Date       :     `03/10            `03/10
Ink Life          :       6 month           6 month
Passed            :       2 month           2 month
Printable Sheet   :    120 pages         120 pages
------------------+------------------+-----------------+-----------------
```

Figure 1-17. Status Sheet of the Stylus Pro 9800

```
Type B            :  Installed
- Current Setting +-----------------+- Printer Status -+----------------
Platen Gap        :Standard         |Version           :SN0xxxx.IBCS
Page Line         :On               |Total Prints      :xxxxxx PG
Interface         :Auto             |Use Ink           :xxxxxx.xml
Code Page         :PC437            |Use Paper         :xxxxxx.xcm
Margine           :T/B15mm          |Mainte Tank       :E[*****]F
Paper Size Check  :ON               |Cutter Life       :E[*****]F
Paper Align Check :ON               |CR Motor          :E[*****]F
Time Out          :30sec            |PF Motor          :E[*****]F
Refresh Margin    :ON               |Pressure Motor    :E[*****]F
Auto Nozzle Check :OFF              |Head              :E[*****]F
Auto Cleaning     :ON               |Cleaner           :E[*****]F
Quiet Cut         :OFF              |
- Ink Cartridge --+-----------------+-----------------+-----------------
Manufacturer      :INK by EPSON      INK by EPSON       INK by EPSON
Ink Type          :     Pigment           Pigment           Pigment
Ink Color         :   Matte Black      Matte Black 2        Magenta
Ink Capacity      :      110ml             110ml             110ml
Ink Left          :    E[*****]F         E[*****]F         E[*****]F
Production Date   :     `02/03            `02/03            `02/03
Expire Date       :     `03/10            `03/10            `03/10
Ink Life          :       6 month           6 month           6 month
Passed            :       2 month           2 month           2 month
Printable Sheet   :    120 pages         120 pages         120 pages
------------------+-----------------+-----------------+-----------------
Manufacturer      :INK by  EPSON      INK by  EPSON      INK by EPSON
Ink Type          :     Pigment           Pigment           Pigment
Ink Color         :    Magenta 2           Cyan             Cyan 2
Ink Capacity      :      110ml             110ml             110ml
Ink Left          :    E[*****]F         E[*****]F         E[*****]F
Production Date   :     `02/03            `02/03            `02/03
Expire Date       :     `03/10            `03/10            `03/10
Ink Life          :       6 month           6 month           6 month
Passed            :       2 month           2 month           2 month
Printable Sheet   :    120 pages         120 pages         120 pages
------------------+-----------------+-----------------+-----------------
Manufacturer      :INK by  EPSON      INK by  EPSON
Ink Type          :     Pigment           Pigment
Ink Color         :     Yellow            Yellow 2
Ink Capacity      :      110ml             110ml
Ink Left          :    E[*****]F         E[*****]F
Production Date   :     `02/03            `02/03
Expire Date       :     `03/10            `03/10
Ink Life          :       6 month           6 month
Passed            :       2 month           2 month
Printable Sheet   :    120 pages         120 pages
------------------+-----------------+-----------------+-----------------
```

Figure 1-18. Status Sheet of the Stylus Pro 7400

☐ Explanation of information printed on the status sheet

Type B	Whether optional Type-B I/F is mounted or not	
Current Setting	Setting content of "PRINTER SETUP" menu in Panel Setting menu.	
Printer Status	Version	Installed firmware version
	Total Print	Total number of printed sheets
	Use Ink	Ink usage counter value (total cumulative amount of ink used for printing, flushing and cleaning)
	Use Paper	Paper usage counter value (total cumulative amount (length) of paper used for printing)
	Mainte Tank Left	Available space in the Maintenance Tank (Left) (Stylus Pro 7800 / Stylus Pro 9800) *1
	Mainte Tank Right	Available space in the Maintenance Tank (Right) (Stylus Pro 7800 / Stylus Pro 9800) *1
	Mainte Tank	Available space in the Maintenance Tank (Stylus Pro 7400 / Stylus Pro 9400) *1
	Cutter Life	Remaining life of the cutter *2
	CR Motor	Remaining life of the CR motor *2
	PF Motor	Remaining life of the PF motor *2
	Head	Remaining life of the Printhead *2
	Cleaner	Remaining life of the Cleaning Unit *2
	Pressure Motor	Remaining life of the Pressure motor *2
Ink Cartridge *4	Manufacture	Name of the manufacturer
	Ink Type	Ink type name
	Ink Color	Name of the ink color
	Ink Capacity	Capacity of the ink cartridge
	Ink Left	Remaining amount of ink *3
	Production Date	The year and month of manufacture
	Expire Date	Expire date of warranty
	Ink Life	Guaranteed period for use after unpacking
	Passed	Time having elapsed after unpacking
	Printable Sheet	Number of sheets which can be printed with the remaining ink (calculated value)

Note "*1": Available space in the Maintenance Tank is indicated as shown below.

100 to 81%	E*****F
80 to 61%	E**** F
60 to 41%	E*** F
40 to 21%	E** F
20 to 10%	E* F
Less than 10%	nn%
0% (Maintenance tank full)	0%

"*2": Remaining lives of the cutter, CR motor, PF motor, Head unit, Cleaning unit and Pressure motor are indicated as shown below.

100 to 81%	E*****F
80 to 61%	E**** F
60 to 41%	E*** F
40 to 21%	E** F
20 to 1%	E* F
Less than 1%	F F

"*3": Remaining amount of ink is indicated as shown below.

100 to 81%	E*****F
80 to 61%	E**** F
60 to 41%	E*** F
40 to 21%	E** F
20% ~ just before near end	E* F
After near end ~ just before ink end	nn%
0% (ink end)	0%

"*4": The ink cartridge information is displayed based on the information stored in the CSIC of the ink cartridge.

1.4.4.20 Printing Job Information

A job history report (up to 10 jobs) stored on the printer can be printed using the “Job Information” in the TEST PRINT menu.

The “job” includes the following operations;

- A print job sent by a host computer
- Printing an adjustment pattern
  (includes Gap Adjustment, Nozzle Check, Cutter Adjustment, and Paper Thickness patterns)
- Printing a Status Sheet or Job Information

The following two items are required to print the Job Information. For more information, see *“1.4.3 Job Information (p.48)”*.

- Print paper size: A4
- Font: Built-in font (Print all in alphanumeric characters)

NOTE
- *2-byte characters in user name and document name is “?”.*
- *“-” is printed if the corresponding value does not exits.*
- *“?” is printed if the corresponding value is unknown.*

```
- Job No.0 - User Name: XXXXXXXXXXXXXXXX Host Name: XXXXXXXXXXXXXXXX
Doc Name  : XXXXXXXXXXXXXXXXXXXXXXXXXXXXXXXX  I/F Type: Unknown
Job State : Processing Start: 00/00/00 00:00:00  End: 00/00/00 00:00:00
Paper Used: W xxxxxmm * H xxxxxmm          Page Count: xxxxx
Ink Used  : LLK xxx.xxml   LM xxx.xxml    LC xxx.xxml    LK xxx.xxml
            PK  xxx.xxml   C  xxx.xxml    M  xxx.xxml    Y  xxx.xxml
- Job No.1 - User Name: XXXXXXXXXXXXXXXX Host Name: XXXXXXXXXXXXXXXX
Doc Name  : XXXXXXXXXXXXXXXXXXXXXXXXXXXXXXXX  I/F Type: Unknown
Job State : Processing Start: 00/00/00 00:00:00  End: 00/00/00 00:00:00
Paper Used: W xxxxxmm * H xxxxxmm          Page Count: xxxxx
Ink Used  : LLK xxx.xxml   LM xxx.xxml    LC xxx.xxml    LK xxx.xxml
            PK  xxx.xxml   C  xxx.xxml    M  xxx.xxml    Y  xxx.xxml
- Job No.2 - User Name: XXXXXXXXXXXXXXXX Host Name: XXXXXXXXXXXXXXXX
Doc Name  : XXXXXXXXXXXXXXXXXXXXXXXXXXXXXXXX  I/F Type: Unknown
Job State : Processing Start: 00/00/00 00:00:00  End: 00/00/00 00:00:00
Paper Used: W xxxxxmm * H xxxxxmm          Page Count: xxxxx
Ink Used  : LLK xxx.xxml   LM xxx.xxml    LC xxx.xxml    LK xxx.xxml
            PK  xxx.xxml   C  xxx.xxml    M  xxx.xxml    Y  xxx.xxml
- Job No.3 - User Name: XXXXXXXXXXXXXXXX Host Name: XXXXXXXXXXXXXXXX
Doc Name  : XXXXXXXXXXXXXXXXXXXXXXXXXXXXXXXX  I/F Type: Unknown
Job State : Processing Start: 00/00/00 00:00:00  End: 00/00/00 00:00:00
Paper Used: W xxxxxmm * H xxxxxmm          Page Count: xxxxx
Ink Used  : LLK xxx.xxml   LM xxx.xxml    LC xxx.xxml    LK xxx.xxml
            PK  xxx.xxml   C  xxx.xxml    M  xxx.xxml    Y  xxx.xxml
- Job No.4 - User Name: XXXXXXXXXXXXXXXX Host Name: XXXXXXXXXXXXXXXX
Doc Name  : XXXXXXXXXXXXXXXXXXXXXXXXXXXXXXXX  I/F Type: Unknown
Job State : Processing Start: 00/00/00 00:00:00  End: 00/00/00 00:00:00
Paper Used: W xxxxxmm * H xxxxxmm          Page Count: xxxxx
Ink Used  : LLK xxx.xxml   LM xxx.xxml    LC xxx.xxml    LK xxx.xxml
            PK  xxx.xxml   C  xxx.xxml    M  xxx.xxml    Y  xxx.xxml
- Job No.5 - User Name: XXXXXXXXXXXXXXXX Host Name: XXXXXXXXXXXXXXXX
Doc Name  : XXXXXXXXXXXXXXXXXXXXXXXXXXXXXXXX  I/F Type: Unknown
Job State : Processing Start: 00/00/00 00:00:00  End: 00/00/00 00:00:00
Paper Used: W xxxxxmm * H xxxxxmm          Page Count: xxxxx
Ink Used  : LLK xxx.xxml   LM xxx.xxml    LC xxx.xxml    LK xxx.xxml
            PK  xxx.xxml   C  xxx.xxml    M  xxx.xxml    Y  xxx.xxml
- Job No.6 - User Name: XXXXXXXXXXXXXXXX Host Name: XXXXXXXXXXXXXXXX
Doc Name  : XXXXXXXXXXXXXXXXXXXXXXXXXXXXXXXX  I/F Type: Unknown
Job State : Processing Start: 00/00/00 00:00:00  End: 00/00/00 00:00:00
Paper Used: W xxxxxmm * H xxxxxmm          Page Count: xxxxx
Ink Used  : LLK xxx.xxml   LM xxx.xxml    LC xxx.xxml    LK xxx.xxml
            PK  xxx.xxml   C  xxx.xxml    M  xxx.xxml    Y  xxx.xxml
- Job No.7 - User Name: XXXXXXXXXXXXXXXX Host Name: XXXXXXXXXXXXXXXX
Doc Name  : XXXXXXXXXXXXXXXXXXXXXXXXXXXXXXXX  I/F Type: Unknown
Job State : Processing Start: 00/00/00 00:00:00  End: 00/00/00 00:00:00
Paper Used: W xxxxxmm * H xxxxxmm          Page Count: xxxxx
Ink Used  : LLK xxx.xxml   LM xxx.xxml    LC xxx.xxml    LK xxx.xxml
            PK  xxx.xxml   C  xxx.xxml    M  xxx.xxml    Y  xxx.xxml
- Job No.8 - User Name: XXXXXXXXXXXXXXXX Host Name: XXXXXXXXXXXXXXXX
Doc Name  : XXXXXXXXXXXXXXXXXXXXXXXXXXXXXXXX  I/F Type: Unknown
Job State : Processing Start: 00/00/00 00:00:00  End: 00/00/00 00:00:00
Paper Used: W xxxxxmm * H xxxxxmm          Page Count: xxxxx
Ink Used  : LLK xxx.xxml   LM xxx.xxml    LC xxx.xxml    LK xxx.xxml
            PK  xxx.xxml   C  xxx.xxml    M  xxx.xxml    Y  xxx.xxml
- Job No.9 - User Name: XXXXXXXXXXXXXXXX Host Name: XXXXXXXXXXXXXXXX
Doc Name  : XXXXXXXXXXXXXXXXXXXXXXXXXXXXXXXX  I/F Type: Unknown
Job State : Processing Start: 00/00/00 00:00:00  End: 00/00/00 00:00:00
Paper Used: W xxxxxmm * H xxxxxmm          Page Count: xxxxx
Ink Used  : LLK xxx.xxml   LM xxx.xxml    LC xxx.xxml    LK xxx.xxml
            PK  xxx.xxml   C  xxx.xxml    M  xxx.xxml    Y  xxx.xxml
```

Figure 1-19. Job information print pattern (Stylus Pro 7800 / Stylus Pro 9800)

```
- Job No.0 - User Name: XXXXXXXXXXXXXXXX Host Name: XXXXXXXXXXXXXXXX
Doc Name  : XXXXXXXXXXXXXXXXXXXXXXXXXXXXXXXX  I/F Type: Unknown
Job State : Processing Start: 00/00/00 00:00:00  End: 00/00/00 00:00:00
Paper Used: W xxxxxmm * H xxxxxmm          Page Count: xxxxx
Ink Used  : MK   xxx.xxml   MK2 xxx.xxml   M  xxx.xxml    M2 xxx.xxml
            C    xxx.xxml   C2  xxx.xxml   Y  xxx.xxml    Y2 xxx.xxml
- Job No.1 - User Name: XXXXXXXXXXXXXXXX Host Name: XXXXXXXXXXXXXXXX
Doc Name  : XXXXXXXXXXXXXXXXXXXXXXXXXXXXXXXX  I/F Type: Unknown
Job State : Processing Start: 00/00/00 00:00:00  End: 00/00/00 00:00:00
Paper Used: W xxxxxmm * H xxxxxmm          Page Count: xxxxx
Ink Used  : MK   xxx.xxml   MK2 xxx.xxml   M  xxx.xxml    M2 xxx.xxml
            C    xxx.xxml   C2  xxx.xxml   Y  xxx.xxml    Y2 xxx.xxml
- Job No.2 - User Name: XXXXXXXXXXXXXXXX Host Name: XXXXXXXXXXXXXXXX
Doc Name  : XXXXXXXXXXXXXXXXXXXXXXXXXXXXXXXX  I/F Type: Unknown
Job State : Processing Start: 00/00/00 00:00:00  End: 00/00/00 00:00:00
Paper Used: W xxxxxmm * H xxxxxmm          Page Count: xxxxx
Ink Used  : MK   xxx.xxml   MK2 xxx.xxml   M  xxx.xxml    M2 xxx.xxml
            C    xxx.xxml   C2  xxx.xxml   Y  xxx.xxml    Y2 xxx.xxml
- Job No.3 - User Name: XXXXXXXXXXXXXXXX Host Name: XXXXXXXXXXXXXXXX
Doc Name  : XXXXXXXXXXXXXXXXXXXXXXXXXXXXXXXX  I/F Type: Unknown
Job State : Processing Start: 00/00/00 00:00:00  End: 00/00/00 00:00:00
Paper Used: W xxxxxmm * H xxxxxmm          Page Count: xxxxx
Ink Used  : MK   xxx.xxml   MK2 xxx.xxml   M  xxx.xxml    M2 xxx.xxml
            C    xxx.xxml   C2  xxx.xxml   Y  xxx.xxml    Y2 xxx.xxml
- Job No.4 - User Name: XXXXXXXXXXXXXXXX Host Name: XXXXXXXXXXXXXXXX
Doc Name  : XXXXXXXXXXXXXXXXXXXXXXXXXXXXXXXX  I/F Type: Unknown
Job State : Processing Start: 00/00/00 00:00:00  End: 00/00/00 00:00:00
Paper Used: W xxxxxmm * H xxxxxmm          Page Count: xxxxx
Ink Used  : MK   xxx.xxml   MK2 xxx.xxml   M  xxx.xxml    M2 xxx.xxml
            C    xxx.xxml   C2  xxx.xxml   Y  xxx.xxml    Y2 xxx.xxml
- Job No.5 - User Name: XXXXXXXXXXXXXXXX Host Name: XXXXXXXXXXXXXXXX
Doc Name  : XXXXXXXXXXXXXXXXXXXXXXXXXXXXXXXX  I/F Type: Unknown
Job State : Processing Start: 00/00/00 00:00:00  End: 00/00/00 00:00:00
Paper Used: W xxxxxmm * H xxxxxmm          Page Count: xxxxx
Ink Used  : MK   xxx.xxml   MK2 xxx.xxml   M  xxx.xxml    M2 xxx.xxml
            C    xxx.xxml   C2  xxx.xxml   Y  xxx.xxml    Y2 xxx.xxml
- Job No.6 - User Name: XXXXXXXXXXXXXXXX Host Name: XXXXXXXXXXXXXXXX
Doc Name  : XXXXXXXXXXXXXXXXXXXXXXXXXXXXXXXX  I/F Type: Unknown
Job State : Processing Start: 00/00/00 00:00:00  End: 00/00/00 00:00:00
Paper Used: W xxxxxmm * H xxxxxmm          Page Count: xxxxx
Ink Used  : MK   xxx.xxml   MK2 xxx.xxml   M  xxx.xxml    M2 xxx.xxml
            C    xxx.xxml   C2  xxx.xxml   Y  xxx.xxml    Y2 xxx.xxml
- Job No.7 - User Name: XXXXXXXXXXXXXXXX Host Name: XXXXXXXXXXXXXXXX
Doc Name  : XXXXXXXXXXXXXXXXXXXXXXXXXXXXXXXX  I/F Type: Unknown
Job State : Processing Start: 00/00/00 00:00:00  End: 00/00/00 00:00:00
Paper Used: W xxxxxmm * H xxxxxmm          Page Count: xxxxx
Ink Used  : MK   xxx.xxml   MK2 xxx.xxml   M  xxx.xxml    M2 xxx.xxml
            C    xxx.xxml   C2  xxx.xxml   Y  xxx.xxml    Y2 xxx.xxml
- Job No.8 - User Name: XXXXXXXXXXXXXXXX Host Name: XXXXXXXXXXXXXXXX
Doc Name  : XXXXXXXXXXXXXXXXXXXXXXXXXXXXXXXX  I/F Type: Unknown
Job State : Processing Start: 00/00/00 00:00:00  End: 00/00/00 00:00:00
Paper Used: W xxxxxmm * H xxxxxmm          Page Count: xxxxx
Ink Used  : MK   xxx.xxml   MK2 xxx.xxml   M  xxx.xxml    M2 xxx.xxml
            C    xxx.xxml   C2  xxx.xxml   Y  xxx.xxml    Y2 xxx.xxml
- Job No.9 - User Name: XXXXXXXXXXXXXXXX Host Name: XXXXXXXXXXXXXXXX
Doc Name  : XXXXXXXXXXXXXXXXXXXXXXXXXXXXXXXX  I/F Type: Unknown
Job State : Processing Start: 00/00/00 00:00:00  End: 00/00/00 00:00:00
Paper Used: W xxxxxmm * H xxxxxmm          Page Count: xxxxx
Ink Used  : MK   xxx.xxml   MK2 xxx.xxml   M  xxx.xxml    M2 xxx.xxml
            C    xxx.xxml   C2  xxx.xxml   Y  xxx.xxml    Y2 xxx.xxml
```

Figure 1-20. Job information print pattern (Stylus Pro 7400 / Stylus Pro 9400)

1.4.4.21 Printing Custom Paper Information

User-defined paper settings stored on the printer using the CUSTOM PAPER menu can be printed out by executing the "Custom Paper" in the TEST PRINT menu. The following two items are required to print the Custom Paper information.

- Print paper size: A4
- Font: Built-in font (Print all in alphanumeric characters)

  NOTE: *"?" is printed out for the settings made by two-byte characters.*

```
Paper No.1
Custom Name : XXXXXXXXXXXXXXXXXXXXXXXXXXXXXX
Platen Gap  :  Standard       Drying Time   : 10.0 sec   Suction  : Standard
Cut Method  :  ThickPaperFast M/W Adj.      : Standard
Ppr Thick.  : 0.2mm           Ppr Feed Adj. : -0.70 %
Paper No.2
Custom Name : XXXXXXXXXXXXXXXXXXXXXXXXXXXXXX
Platen Gap  :  Standard       Drying Time   : 10.0 sec   Suction  : Standard
Cut Method  :  ThickPaperFast M/W Adj.      : Standard
Ppr Thick.  : 0.2mm           Ppr Feed Adj. : -0.70 %
Paper No.3
Custom Name : XXXXXXXXXXXXXXXXXXXXXXXXXXXXXX
Platen Gap  :  Standard       Drying Time   : 10.0 sec   Suction  : Standard
Cut Method  :  ThickPaperFast M/W Adj.      : Standard
Ppr Thick.  : 0.2mm           Ppr Feed Adj. : -0.70 %
Paper No.4
Custom Name : XXXXXXXXXXXXXXXXXXXXXXXXXXXXXX
Platen Gap  :  Standard       Drying Time   : 10.0 sec   Suction  : Standard
Cut Method  :  ThickPaperFast M/W Adj.      : Standard
Ppr Thick.  : 0.2mm           Ppr Feed Adj. : -0.70 %
Paper No.5
Custom Name : XXXXXXXXXXXXXXXXXXXXXXXXXXXXXX
Platen Gap  :  Standard       Drying Time   : 10.0 sec   Suction  : Standard
Cut Method  :  ThickPaperFast M/W Adj.      : Standard
Ppr Thick.  : 0.2mm           Ppr Feed Adj. : -0.70 %
Paper No.6
Custom Name : XXXXXXXXXXXXXXXXXXXXXXXXXXXXXX
Platen Gap  :  Standard       Drying Time   : 10.0 sec   Suction  : Standard
Cut Method  :  ThickPaperFast M/W Adj.      : Standard
Ppr Thick.  : 0.2mm           Ppr Feed Adj. : -0.70 %
Paper No.7
Custom Name : XXXXXXXXXXXXXXXXXXXXXXXXXXXXXX
Platen Gap  :  Standard       Drying Time   : 10.0 sec   Suction  : Standard
Cut Method  :  ThickPaperFast M/W Adj.      : Standard
Ppr Thick.  : 0.2mm           Ppr Feed Adj. : -0.70 %
Paper No.8
Custom Name : XXXXXXXXXXXXXXXXXXXXXXXXXXXXXX
Platen Gap  :  Standard       Drying Time   : 10.0 sec   Suction  : Standard
Cut Method  :  ThickPaperFast M/W Adj.      : Standard
Ppr Thick.  : 0.2mm           Ppr Feed Adj. : -0.70 %
Paper No.9
Custom Name : XXXXXXXXXXXXXXXXXXXXXXXXXXXXXX
Platen Gap  :  Standard       Drying Time   : 10.0 sec   Suction  : Standard
Cut Method  :  ThickPaperFast M/W Adj.      : Standard
Ppr Thick.  : 0.2mm           Ppr Feed Adj. : -0.70 %
Paper No.10
Custom Name : XXXXXXXXXXXXXXXXXXXXXXXXXXXXXX
Platen Gap  :  Standard       Drying Time   : 10.0 sec   Suction  : Standard
Cut Method  :  ThickPaperFast M/W Adj.      : Standard
Ppr Thick.  : 0.2mm           Ppr Feed Adj. : -0.70 %
```

Figure 1-21. Custom Paper Information

1.4.4.22 Firmware Version

The "Version" in the PRINTER STATUS menu displays the version of the installed firmware on the LCD panel.

Table 1-42. Firmware Version Display

Model	Display
Stylus Pro 7400/7800	VERSION SN0xxxx.IBCS
Stylus Pro 9400/9800	VERSION SW0xxxx.IBCS

Note • SW0 and SN0:0 are firmware versions for special destination

- xxxx: version of firmware (last 4 characters)
- I: "4" is displayed for the four-color model, and "8" is displayed for the eight-color model.
- B: Business system setting
  In accordance with the result of calculation of the following printer conditions, a character to be displayed (1 to F) is determined.
  If all bits are 0, "0" is displayed.
  - Bit0: Restraint on graphic print function
    0: Restraint on graphic print function is not available.
    1: Restraint on graphic print function is available.
  - Bit1: Credit function
    0: Credit function is not available.
    1: Credit function is available.
  - Bit2: Credit counter
    0: Credit No. is 0 or credit function is OFF.
    1: Credit No. is 1 or more with credit function ON.
  - Bit3: Reserved
- C: If a special setting is made for custom operation, the custom number is displayed.
  If a custom operation is not set, "0" is displayed.
- S: Not displayed on the mass-produced machines

1.4.4.23 Printable Pages

The "Printable Pages" in the PRINTER STATUS menu displays estimated pages that can be printed with the remaining ink per cartridge.
The estimation is performed as follows:

Remaining amount of ink after printing ÷ Amount of ink used to print a page

Note • A whole number which can be specified by the printer driver is displayed as the result of the calculation.

- "---" is displayed if the corresponding value cannot be obtained.

☐ Printable Pages menu

■ Stylus Pro 7800 and Stylus Pro 9800

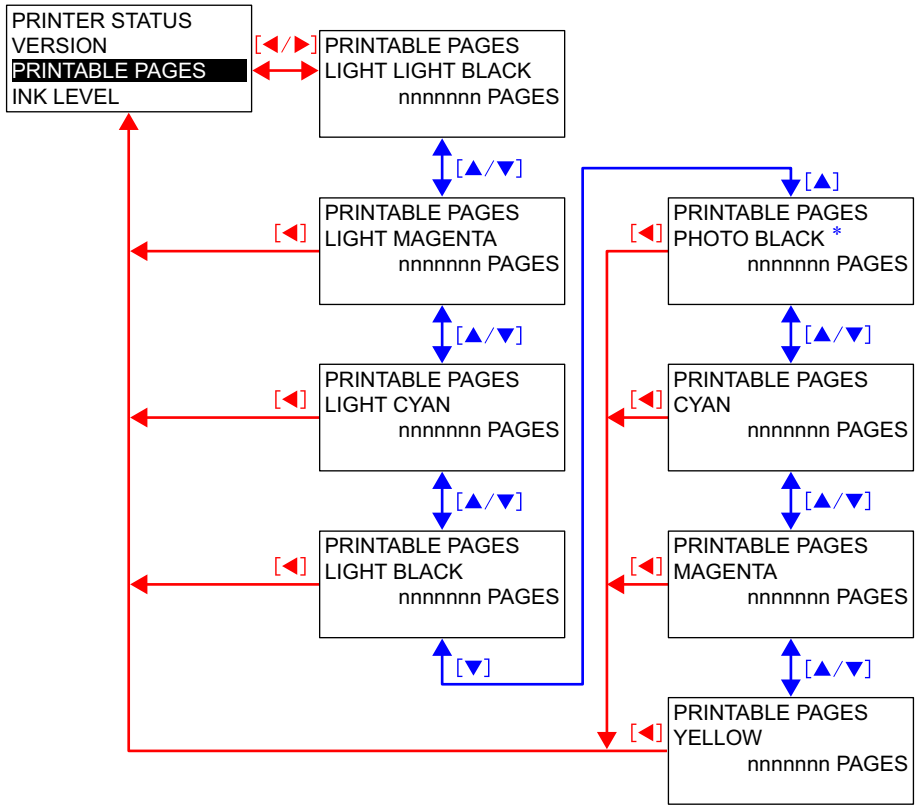

Note "*": "MATTE BLACK" is displayed if it is installed instead of the "PHOTO BLACK".

■ Stylus Pro 7400 and Stylus Pro 9400

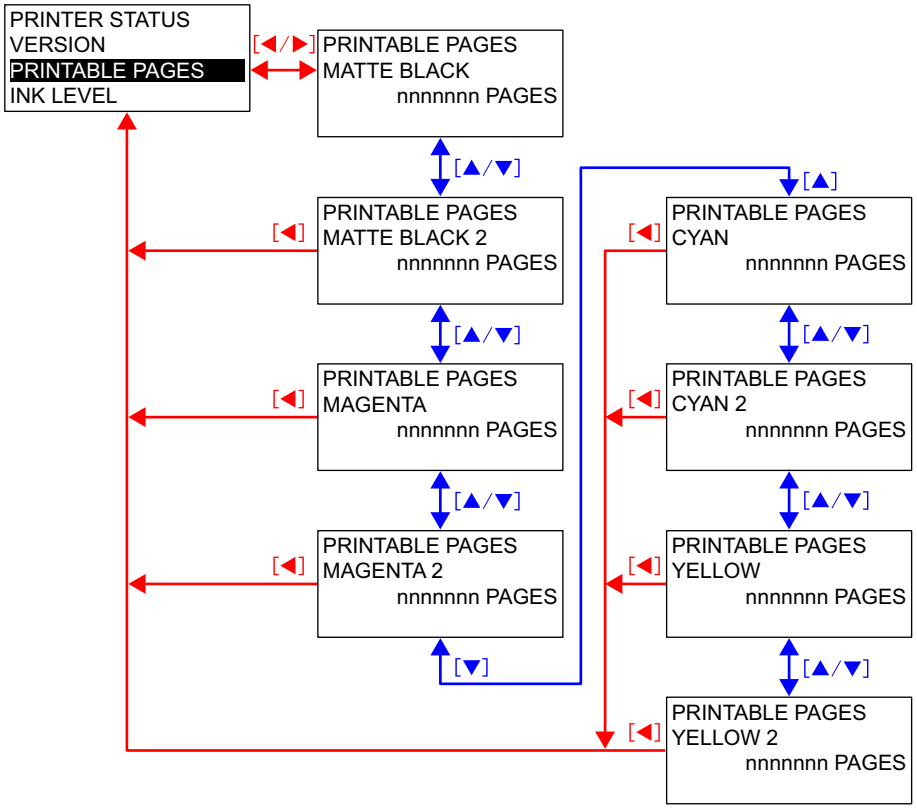

1.4.4.24 Ink Level

The “Ink Level” in the PRINTER STATUS menu displays remaining amount of ink per ink cartridge.

Table 1-43. Ink Level Display

Remaining Ink Level	Panel display	Ink Check LED
100 to 81 %	E*****F	OFF
80 to 61 %	E**** F	OFF
60 to 41 %	E*** F	OFF
40 to 21 %	E** F	OFF
20 % or less (Until the Ink Low error occurs)	E* F	OFF
Ink Low status (Until the Ink Out error occurs)	nn%	Flashing
Ink Out	0%	ON

Note
- The remaining counter is converted to percentage after the Ink Low error occurs.
- An amount of ink consumed for performing initial ink charge for newly attached ink cartridges is not included in the 100 % amount. The remaining amount of ink after the initial ink charge is regarded as full status (100 %) and then the ink usage counter starts.

☐ Ink Level Menu

■ Stylus Pro 7800 and Stylus Pro 9800

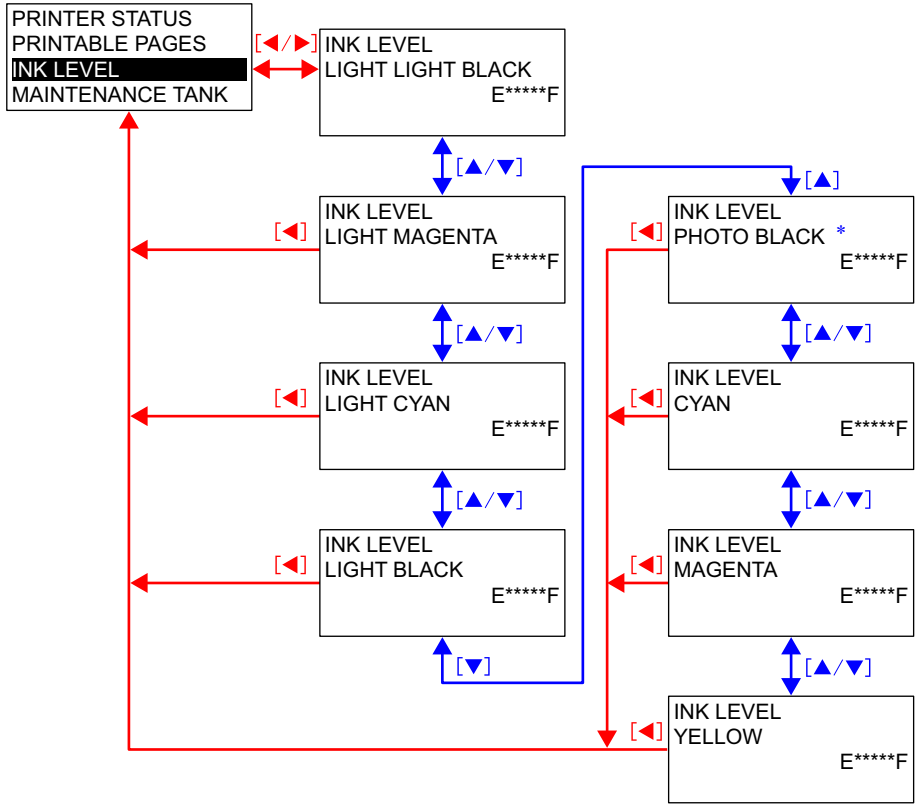

Note "*": MATTE BLACK" is displayed if it is installed instead of the "PHOTO BLACK".

■ Stylus Pro 7400 and Stylus Pro 9400

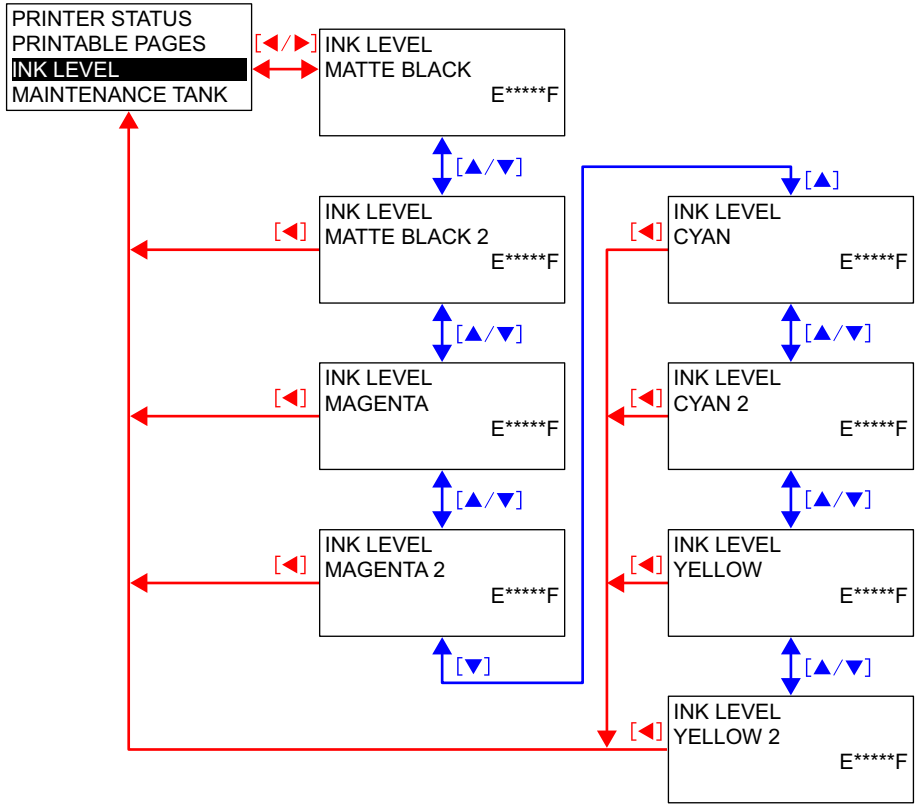

1.4.4.25 Maintenance Tank Counter

The “Maintenance Tank” in the PRINTER STATUS menu displays available space in the Maintenance Tank.

NOTE: *Maintenance Tank total capacity = 1300 g*

Table 1-44. Available Space of the Maintenance Tank

Free space	Panel display	Ink Check LED
100 to 81 %	E*****F	OFF
80 to 61 %	E**** F	OFF
60 to 41 %	E*** F	OFF
40 to 21 %	E** F	OFF
20 to 10 %	E* F	OFF
Less than 10 %	nn %	Flashing
Maintenance tank full	0 %	ON

- ☐ Warning
  If the remaining capacity of the tank becomes less than 10 %, the printer causes “Maintenance Tank Near Full” error flashing the Ink Check LED.
- ☐ Error
  A “Maintenance Tank Full” error occurs when the available capacity becomes 0 % and the Ink Check LED lihgts.
- ☐ Counter clear
  It is cleared by replacing maintenance tank.

1.4.4.26 (Ink and Paper) Usage Counter

The “Usage Count” in the PRINTER STATUS menu displays a cumulative amount of consumed ink or paper.

- ☐ Ink usage counter
  A cumulative amount of ink consumed by the following operations is displayed by the milliliter.
  - ■ Performing print jobs (regardless of completion/interruption of the jobs)
  - ■ Flashing operations
  - ■ Cleaning operations

NOTE
- *The printer sums up the amount of ink consumed by IR command.*
- *“---” is displayed if the corresponding value cannot be obtained.*

- ☐ Paper usage counter
  A cumulative amount of paper used for printing (includes automatic paper feed amount, not includes the amount of manual feed) is displayed by the centimeter.

NOTE
- *The printer sums up paper feed amounts performed by JS to JE commands.*
- *“---” is displayed if the corresponding value cannot be obtained.*

1.4.4.27 Clear Usage Counter

- Clear Usage Count - INK
  Resets the “Ink usage counter” to 0.
- Clear Usage Count - PAPER
  Resets “Paper usage counter” to 0.
- Clear Usage Count menu

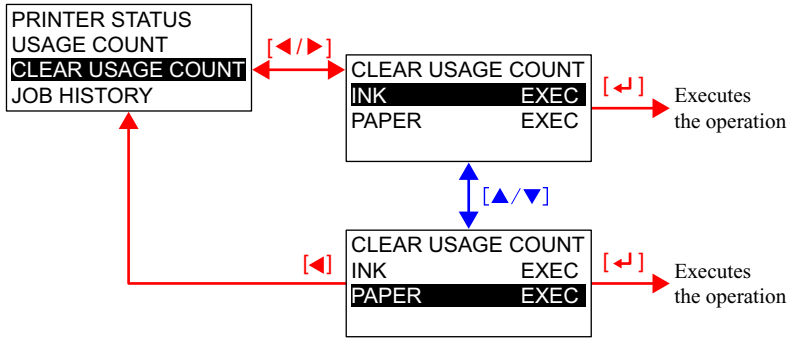

1.4.4.28 Job History

The “Job History” displays job history report (up to 10 jobs) stored on the printer.

- Job No.
  A number assigned to each job report in reverse chronological order. The number of the latest job is 0.
- Paper usage
  A total area of paper consumed for each job is displayed (height x width = cm^2)

NOTE: *The printer sums up paper feed amounts performed by JS to JE commands.*

- Ink usage
  An amount of ink consumed for each job is displayed by the milliliter.

NOTE
- *The printer sums up the amount of ink consumed by IR command, or JS to JE commands.*
- *If IR or JS/JE commands are not specified in the job, ink usage is not counted.*
- *"---" is displayed if the corresponding value cannot be obtained.*

- Job History menu

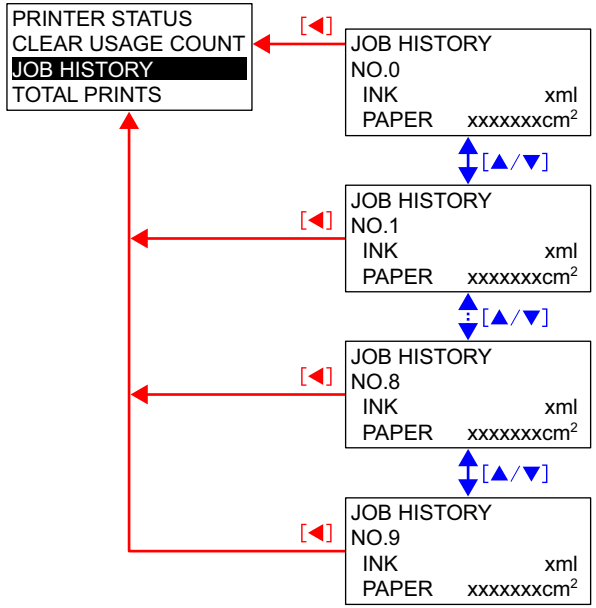

1.4.4.29 Total Prints

The "Total Prints" displays a cumulative number of printed pages by decimal number up to 6-digit.

1.4.4.30 Service Life

- Cutter life
  - Calculation method
    The cutter life is guaranteed for 2,000 times of cutting operations. Each cutting operation is counted as one time regardless of the paper size.The remaining life is indicated based on the usage counter and the guaranteed 2,000 times of life.
  - Panel Display (remaining ratio of the life)

100 to 81 %	E*****F
80 to 61 %	E**** F
60 to 41 %	E*** F
40 to 21 %	E** F
20 to 1 %	E* F
less than 1 %	E F

  - Maintenance call
    Not occurs due to the following reasons.
    - The cut result shows the degree of cutter consumption.
    - No fatal accident is caused.
    - The user can replace cutters easily.
  - Fatal error
    Not occurs
  - Counter clear
    Cleared by replacing the cutter using the "Cutter Replacement" in the MAINTENANCE menu.

CHECK POINT

This life counter should be used as a guideline. As the actual life of the cutter varies depending on various factors, it must be replaced on the basis of observed conditions.

- CR Motor life
  - Calculation method
    The life of the CR motor is regarded as that of the Ink Supply Tube because a malfunction of the tube due to its wear can cause a serious failure of the CR motor. The guaranteed life of the Ink Supply Tube is defined by the number of Carriage movement cycles, so the remaining amount of the CR motor life is obtained based on the Carriage movement cycles.

Table 1-45. Reference Values

Model	CR Movement Cycles
Stylus Pro 7400/7800	1,820,000
Stylus Pro 9400/9800	3,150,000

  - Panel Display (remaining ratio of the life)

100 to 81 %	E*****F
80 to 61 %	E**** F
60 to 41 %	E*** F
40 to 21 %	E** F
20 to 1 %	E* F
less than 1 %	E F

  - Maintenance call
    Occurs when the remaining life becomes less than 4%.
  - Fatal error
    A service call error occurs when the remaining life becomes 0 to inform that the Ink Supply Tube must be checked for any damage.
  - Counter clear
    Cleared by executing the "Reset When CR Unit Change" in the Adjustment Program.

CHECK POINT

These values are intended to assist service personnel only.
Do not explain the meaning of the display to users.

- PF Motor life
  - Calculation method
    The PF motor and any other parts or components in the paper feed mechanism are not required to be replaced within the lifespan of the printer. This counter can be used to troubleshoot a problem when the printer is used beyond its service life. The remaining ratio is obtained based on a cumulative travel distance of the PF motor.
  - Panel Display (remaining ratio of the life)

100 to 81 %	E*****F
80 to 61 %	E**** F
60 to 41 %	E*** F
40 to 21 %	E** F
20 to 1 %	E* F
less than 1 %	E F

  - Maintenance call
    Does not occur because the service is not required within the lifespan of the printer.
  - Fatal error
    Does not occur because the failure mode is not fatal.
  - Counter clear
    Cleared by executing the “Reset PF Motor Counter” in the Adjustment Program.
  - Continuity of counter
    Continues to count even after the remaining life becomes 0% until the full-digit of 32 bits counter reaches the maximum positive integers.

CHECK POINT

These values are intended to assist service personnel only.
Do not explain the meaning of the display to users.

- Head Unit life
  - Calculation method
    The total life of the unit is calculated by multiplying the guaranteed number of shots for each color nozzle by 180 nozzles. The printer counts the shooting number of times by each color rounding the value by 2^{20} per every page, and calculates the remaining ratio of the unit life based on the total life and the maximum cumulative shots among the all color nozzles.
  - Panel Display (remaining ratio of the life)

100 to 81 %	E*****F
80 to 61 %	E**** F
60 to 41 %	E*** F
40 to 21 %	E** F
20 to 1 %	E* F
less than 1 %	E F

  - Maintenance call
    Does not occur for the head unit.
  - Fatal error
    Does not occur for the head unit.
  - Counter clear
    Cleared by executing the “Reset When PrintHead Change” in the Adjustment Program.
  - Continuity of counter
    Continues to count even after the remaining life becomes 0% until the full-digit of 32 bits counter reaches the maximum positive integers.

CHECK POINT

These values are intended to assist service personnel only.
Do not explain the meaning of the display to users.

- Cleaning Unit life
  - Calculation method
    The life of the cleaning unit is judged by the life of the pump motor. When replacing the cap assy., pump assy., flashing box, and the wiper, the cleaning unit must be replaced together with them.
  - Panel Display (remaining ratio of the life)

100 to 81 %	E*****F
80 to 61 %d	E**** F
60 to 41 %	E*** F
40 to 21 %	E** F
20 to 1 %	E* F
less than 1 %	E F

  - Maintenance call
    Occurs when the remaining life ration becomes less than 4%.
  - Fatal error
    A service call error occurs when the remaining life becomes 0 because a paper suction failure can occur.
  - Counter clear
    Cleared by executing the “Reset When Cleaning Unit Change” in the Adjustment Program.

CHECK POINT

These values are intended to assist service personnel only.
Do not explain the meaning of the display to users.

- Pressure Motor life
  - Calculation method
    The life of the Pressure Pump Unit is judged by the life of the Pressure Pump. Replace the Pressure Pump Unit when the Pressure Motor life error occurs.
  - Panel Display (remaining ratio of the life)

100 to 81 %	E*****F
80 to 61 %	E**** F
60 to 41 %	E*** F
40 to 21 %	E** F
20 to 1 %	E* F
less than 1 %	E F

  - Maintenance call
    Occurs when the remaining life ration becomes less than 4%.
  - Fatal error
    A service call error occurs when the remaining life becomes 0 because a pressurizing failure can occur.
  - Counter clear
    Cleared by executing the “Reset Pump Counter” in the Adjustment Program.

CHECK POINT

These values are intended to assist service personnel only.
Do not explain the meaning of the display to users.

☐ Service Life Menu

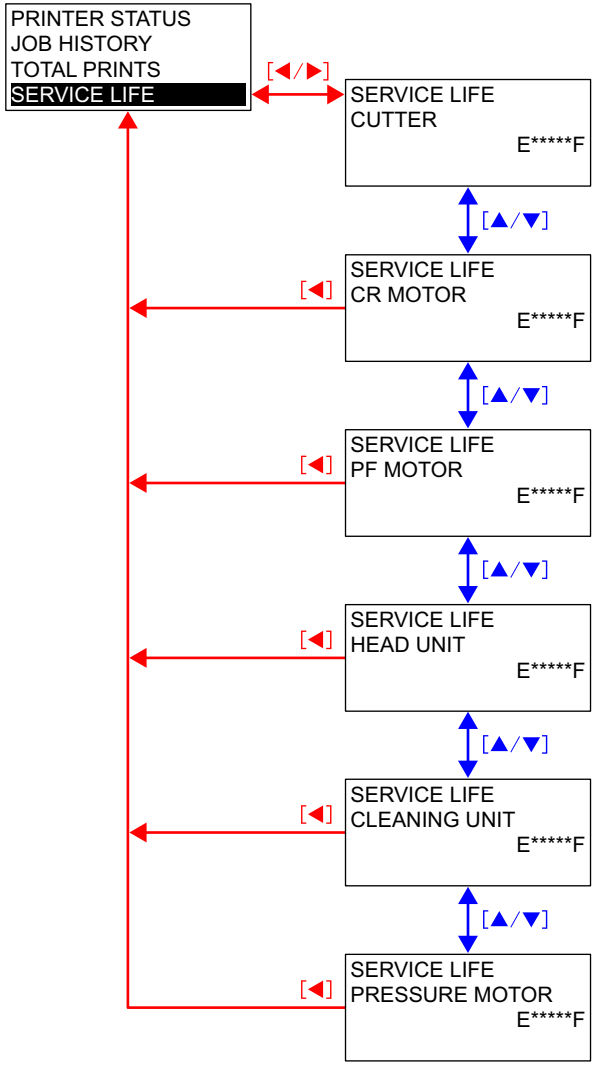

1.4.4.31 Custom Paper

This function allows the user to store the user-defined paper settings up to 10. Once the paper setting is made, the user can retrieve the setting just by specifying the assigned number. The user can refer to, save, delete or set the Custom Paper also by the "EPSON Service Utility".

☐ Setting Method

1. Enter the Custom Paper menu in the panel setting mode.
2. Select a number for the paper setting. (Standard, 1 - 10)
3. Select the PG (Platen Gap).
4. Print the paper thickness detection pattern
   (It is not printed when the "Standard" is selected.)
5. Check the printed patterns and select the number of the pattern with the least displacement.
6. Select the cutting method.
7. Enter paper feed adjustment value.
8. Enter the ink drying time for each pass.
9. Select the paper suction.
10. Select the MW (Micro Wave) print quality setting.

NOTE
- *In despite of paper number, it is possible to set paper related setting independently.*
- *For details of the pattern, see "Paper thickness detection pattern (p.92)".*
- *When "STD" is selected for paper number, above 3.-10. are not displayed and cannot be set.*
- *"PRINTING" is displayed during printing the detection pattern.*
- *The default display for paper thickness number selection is the number corresponding to paper thickness when gap adjustment is performed.*
- *The Platen Gap may be automatically set to Wider or Standard depends on the result of detection by the paper thickness sensor.*

☐ Custom Paper setting handling

Paper setup	Operation
Standard	When each setting item values are set by commands, the printer follows the command settings.
1 to 10	User-defined paper setting is used regardless of settings specified by commands.

Note : When the Custom Paper is set to 1 to 10, the setting (PG position) is prioritized and PG settings made using commands or printer setting menu are ignored. And the Platen Gap Setting icon does not appear on the LCD panel. See "Platen Gap Setting (p.46)".

☐ Custom Paper setting items

Table 1-46. Custom Paper Settings

Item	Details	Setting value
PLATEN GAP	Platen gap (gap between paper and the printhead) can be selected from the five options.	SN m1 = 01h Widest m2=05h (2.6 mm) Wider m2=01h (2.1 mm) Wide m2=02h (1.5 mm) Standard m2=03h (1.2 mm) Narrow m2=04h (0.8 mm)
CUT METHOD	There are four preset settings for cutting operation to be easily selected for the target paper type.	SN m1 = 80h / SN m1 = 81h Standard m2 = 03h *1 / m2 = 65h Thin Paper m2 = 02h / m2 = 49h Thick Paper, Fast m2 = 01h / m2 = 7Eh Thick Paper, Slow m2 = 06h / m2 = 65h
PAPER FEED ADJUST	Paper feed amount can be selected. The printer recognizes this setting as the absolute value.	-0.7% ≤ ±0% ≤ 0.7% SN m1 = 04h At 0% SN m2 = 65h -At 70% SN m2 = 1Fh At 70% SN m2 = ABh
DRYING TIME	Time period for drying ink can be specified in the range of 0 to 10,000 ms. The Carriage stops at its anti-home side during the specified time period. (DR m1=40h)	0 to 10000 msecs (in increments of 100 msecs) *2 0000h to 01F4h

Table 1-46. Custom Paper Settings (continued)

Item	Details	Setting value
PAPER SUCTION	Paper suction level to ensure stable paper feeding can be selected from five options. "-1" is suitable for thin paper (film, etc.). It is normally better to decrease (-2, -3, or -4) according to the paper thickness.	SN m1 = 05h Standard m2 = 33h (100%) -1 m2 = 2Bh (84%) -2 m2 = 22h (66%) -3 m2 = 1Ah (50%) -4 m2 = 12h (34%)
MW ADJUST-MENT	Micro-weave mode can be adjusted. Decrease the value to put print speed above the quality, and increase it to put the quality above the speed.	See " M/W Setting List (p89)" for the information on the selectable MW modes.

Note "*1": The parameters for the Cut Method differs between the panel setting and the printer driver. The table below shows the parameters set by the printer driver.

Cut Method	SN m1=80h (Cut Method)	SN m1=81h (Cutting Pressure)
Standard	m2=00h (Main unit table)	m2=00h (Main unit table)
Thin Paper	m2=02h (Medium speed rough edge)	m2=49h (Duty:70% 300gf)
Thick Paper, Fast	m2=01h (Standard second level)	m2=7Eh (Duty:125% 700gf)
Thick Paper, Slow	m2=06h (Low speed rough edge)	m2=65h (Duty:100% 500gf)

"*2": The EX1B command sends the value in 1-msec units and the media table area in the printer also records in 1-msec units. However, with the printer utility or the panel setting, the unit is 100 msec. So even when the value is specified in 1-msec or 10-msec, the panel displays the value in 100-msec unit rounding it down to the nearest hundredth of a millisecond.

Note
- The values set by EX 1B commands are the same as the parameters shown in the table.
- When invalid parameters are set by EX 1B commands, they are automatically changed to the following settings:
  - PLATEN GAP: Standard m2=03h (1.2 mm)
  - CUT METHOD: Standard m2=03h m2=65h
  - PAPER FEED ADJUST: 0% SN m2 = 65h
  - DRYING TIME: 0sec
  - PAPER SUCTION: Standard m2=33h (100%)
  - MW ADJUSTMENT: n2:00h

☐ M/W Setting List

Table 1-47. M/W (Print Mode) Settings

Color number	M/W mode setting ESC (i		Raster resolution setting	Dot size setting	Bit/ Pixel	OL	Output resolution	DS range	Remarks	Panel setting	UNIT No.	Mode ID				Restrictions
	n1	n2	ESC (D	ESC (e								Color No.	Horizontal resolution	Vertical resolution	No.	
8	00h	---	360 x 180	VSD1/VSD2/ VSD3_N	2	DMW	360 x 180	---	---	Standard /1/2	10	8	360	180	0	---
	00h	---	720 x 180	VSD3_HR	1	DMW	720 x 180	---	---	Standard /1/2	20	8	720	180	0	---
	01h	10h	360 x 360	VSD1 (ECO)	1	M/F	360 x 360	---	360x360 M/F setting is recommended to this setting	Standard /1/2	30	8	360	360	1	---
	00h	00h	360 x 360	VSD1 (ECO)	1	M/F	360 x 360	---	Supports driver of conventional model	Standard /1/2	30	8	360	360	1	---
	01h	00h	360 x 360	VSD1	2	FD+36POL	360 x 360	---	---	Standard /1/2	40	8	360	360	0	---
	01h	00h	360 x 720	VSD1	2	FD+21POL	360 x 720	---	---	Standard /1/2	50	8	360	720	0	---
	01h	00h	720 x 360	VSD1	2	FOL+36POL	720 x 360	---	---	Standard /1/2	60	8	720	360	0	---
	01h	00h	720 x 360	VSD2	2	FOL+36POL	720 x 360	---	---	Standard /1/2	70	8	720	360	0	---
	01h	10h	720 x 720	VSD2	2	FOL+21POL	720 x 720	---	---	1	80	8	720	720	0	---
	01h	00h	720 x 720	VSD2	2	FOL+48POL	720 x 720	0±3	---	Standard	81	8	720	720	1	---
	01h	20h	720 x 720	VSD2	2	FOL+46POL	720 x 720	0±5	---	2	82	8	720	720	2	---
	01h	00h	1440 x 720	VSD3_N	2	FOL+11POL	1440 x 720	---	---	Standard	90	8	1440	720	0	---
	01h	10h	1440 x 720	VSD3_N	2	FOL+28POL	1440 x 720	---	---	1	91	8	1440	720	1	---
	01h	20h	1440 x 720	VSD3_N	2	FOL+11POL	1440 x 720	---	---	2	92	8	1440	720	2	---
	01h	30h	1440 x 720	VSD3_N	2	FOL+90POL	1440 x 720	---	Equivalent to 8 pass	---	93	8	1440	720	3	---
	01h	00h	2880 x 1440	VSD3_HR	1	FOL+6POL	2880 x 1440	---	---	Standard /1/2	A0	8	2880	1440	0	---
	01h	00h	1440 x 1440	VSD3_N	2	FOL+6POL	1440 x 1440	---	Not supported by standard driver	Standard /1/2	B0	8	1440	1440	0	Borderless print is N/A
	01h	00h	2880 x 2880	VSD3_HR	1	FOL	2880 x 2880	---	Not supported by standard driver	Standard /1/2	C0	8	2880	2880	0	Borderless print is N/A, Upper and lower margin enlarge
	01h	10h	2880 x 2880	VSD3_HR	1	FOL	2880 x 2880	---	Not supported by standard driver / Monochrome only	Standard /1/2	C1	8	2880	2880	1	Borderless print is N/A, Upper and lower margin enlarge

Continued to next page

Table 1-47. M/W (Print Mode) Settings(continued)

Color number	M/W mode setting ESC (i		Raster resolution setting	Dot size setting	Bit/ Pixel	OL	Output resolution	DS range	Remarks	Panel setting	UNIT No.	Mode ID				Restrictions
	n1	n2	ESC (D	ESC (e								Color No.	Horizontal resolution	Vertical resolution	No.	
4	00h	---	360 x 180	VSD1/VSD2/ VSD3_N	2	DMW	360 x 180	---	---	Standard /1/2	10	4	360	180	0	---
	00h	---	720 x 180	VSD3_HR	1	DMW	720 x 180	---	---	Standard /1/2	20	4	720	180	0	---
	01h	10h	360 x 360	VSD1 (ECO)	1	BAND	360 x 360	---	360x360 BAND setting is recommended to this setting	Standard /1/2	30	4	360	360	1	---
	00h	00h	360 x 360	VSD1 (ECO)	1	BAND	360 x 360	---	Supports driver of conventional model	Standard /1/2	30	4	360	360	1	---
	01h	00h	360 x 360	VSD1	2	FD+117POL	360 x 360	---	---	Standard /1/2	40	4	360	360	0	---
	01h	00h	360 x 720	VSD1	2	FD+72POL	360 x 720	---	H720 adjustment	Standard /1/2	50	4	360	720	0	---
	01h	10h	360 x 720	VSD1	2	FD+72POL	360 x 720	---	For CAD line drawing	Standard /1/2	51	4	360	720	1	---
	01h	10h	720 x 360	VSD2	2	FOL+117POL	720 x 360	---	---	Standard /1/2	70	4	720	360	0	---
	01h	10h	720 x 720	VSD2	2	FOL+72POL	720 x 720	---	---	1	80	4	720	720	0	---
	01h	20h	720 x 720	VSD2	2	FOL+146POL	720 x 720	0±4	---	2	81	4	720	720	1	---
	01h	00h	720 x 720	VSD2	2	FOL+148POL	720 x 720	0±4	---	Standard	82	4	720	720	2	---
	01h	10h	1440 x 720	VSD3_N	2	FOL+41POL	1440 x 720	---	---	1	90	4	1440	720	0	---
	01h	00h	1440 x 720	VSD3_N	2	FOL+99POL	1440 x 720	---	---	Standard	91	4	1440	720	1	---
	01h	20h	1440 x 720	VSD3_N	2	FOL+100POL	1440 x 720	---	---	2	92	4	1440	720	2	---
	01h	30h	1440 x 720	VSD3_N	2	FOL+178POL	1440 x 720	---	Correspond to 8 pass	---	93	4	1440	720	3	---

Note 1: The printer switches to M/F or BAND VSD1 mode when none of the modes shown in the table matches with the job.

2: Dot size control specification

Dot name	Replacement dot
Micro Dot	VSD2-M
Normal Dot	VSD2-L
Normal Dot 2 VSD1 (ECO)	VSD1-L

3: When specifying the dot sizes shown in the above table, the raster data should be binary.

Custom Paper menu

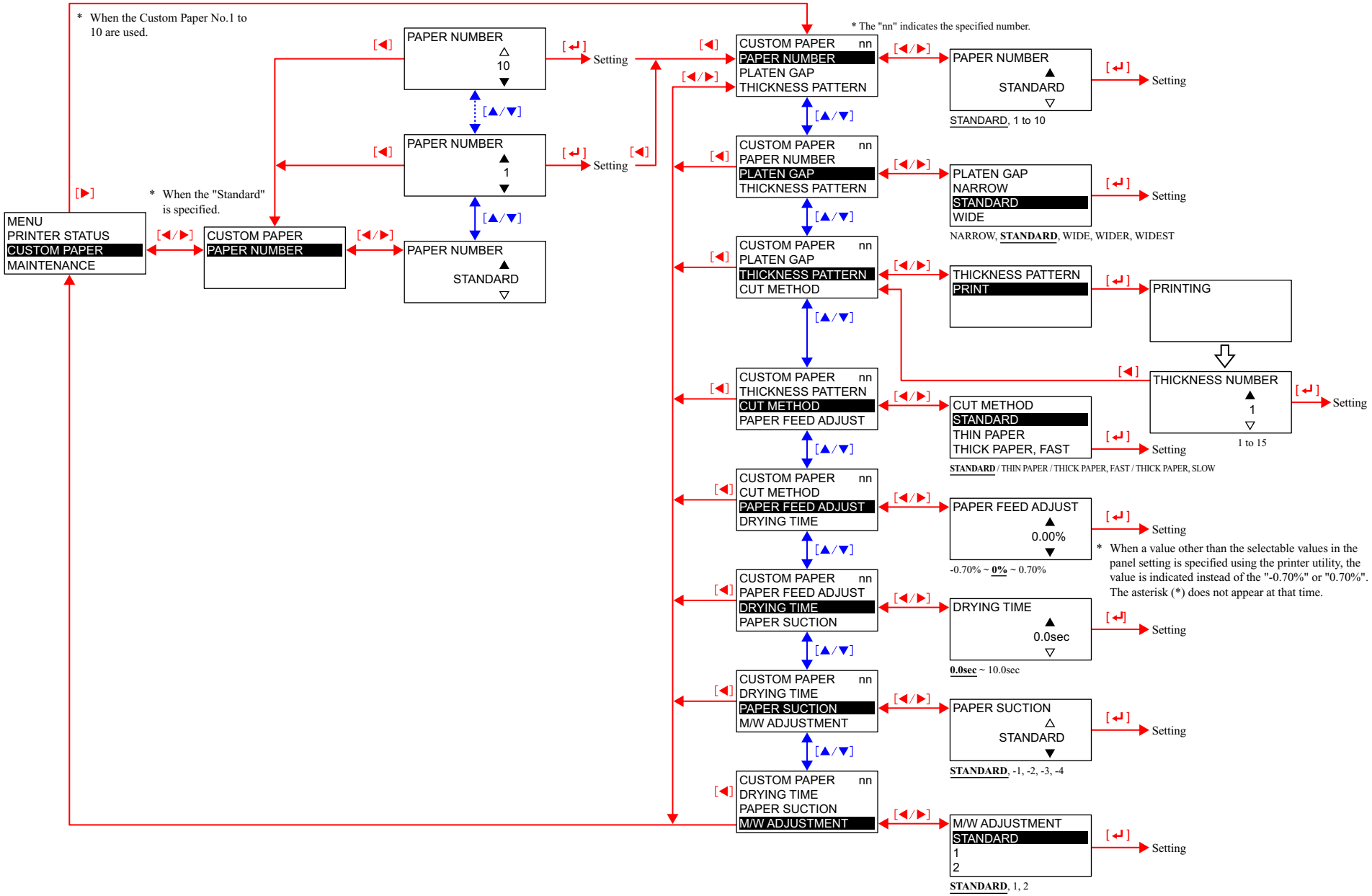

☐ Paper thickness detection pattern

■ Printing specifications

Head speed	240cps
Pattern height	64 Dot
Dot size	VSD2 Large
Color	Black
Print direction	Uni-D
Pattern interval	Upper row: Regular intervals Lower row: One of the 16 lines reflects the current PG setting. The gap between the line and the upper line becomes the center value. The gaps between the other 15 lines and their corresponding upper lines are changed from the center value by a set amount and the all gaps are different from each other.
Temperature adjustment	TBD
Other	When printing from the edge of the paper, feed 90mm of roll paper or 50mm of cut sheet before starting printing.

■ Pattern numbers and paper thickness

Number during pattern printing	1	2	3	...	...	15
Paper thickness (mm)	0.1	0.2	0.3	...	...	1.5

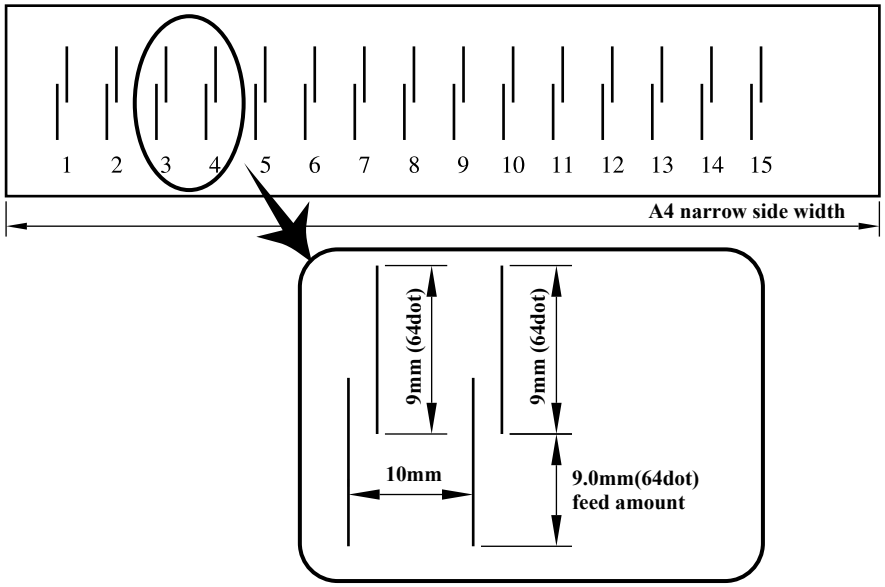

Figure 1-22. Paper thickness detection pattern

■ Shifting amount of the lower lines
The following illustrates and explains the shifting amount of the lower lines printed on the pattern assuming that the shift amount is “x” micrometers when the paper thickness is changed by 0.1mm.

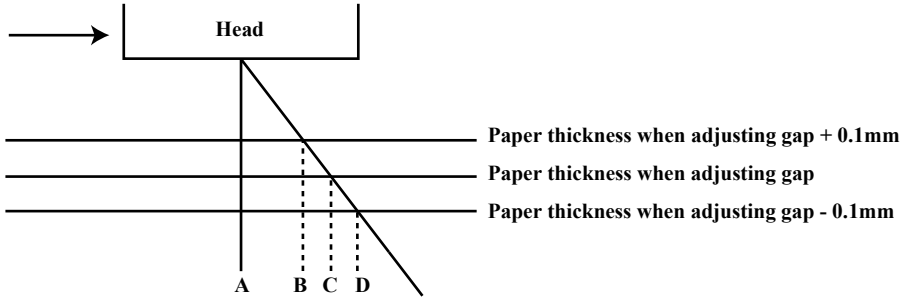

Figure 1-23. Shifting Amount of the Lower Lines on the Pattern

Note : AB: Gap adjustment value when paper thickness is +0.1mm
AC: Present gap adjustment value
AD: Gap adjustment value when paper thickness is -0.1mm

Given that the gap regularly corresponds to the change in paper thickness;
X* = AC - AB = AD - AC

* The “x” value is 240 cps or 14.42 micron meters in VSD2 mode.
The value is saved on the NVRAM, and is left changeable.

Example) Gap adjustment when paper thickness is 0.2mm

Pattern number	Gap between the Upper and Lower lines	Pattern number	Gap between the Upper and Lower lines
1	+2X	9	-6X
2	+1X	10	-7X
3	± 0	11	-8X
4	-1X	12	-9X
5	-2X	13	-10X
6	-3X	14	-11X
7	-4X	15	-12X
8	-5X	16	-13X

1.4.4.32 Cutter Replacement

The “Cutter Replacement” in the MAINTENANCE menu displays instructions for replacing the cutter on the LCD panel in accordance with operations made by the user.

☐ Procedure for replacing the cutter

1. Enter the “Cutter Replacement” menu using the panel.
(You can also access the menu just by holding down the [Paper Select ◀] button for three seconds)
2. Open the front cover following the instruction displayed on the LCD.
3. Follow the next instruction to replace the cutter.
4. Close the front cover when the instruction is displayed.

NOTE: *The cutter replacing work can be interrupted by the following errors. The printer displays the error message for three seconds and returns to the MAINTENANCE” menu screen.*

- *Ink end.*
- *Ink cartridge model wrong.*
- *CSIC contact error.*
- *Ink cartridge failure.*
- *No ink cartridge.*
- *When thick paper is set.*

☐ Correcting improper cutter installation
The printer runs a cutter failure confirmation sequence (displays confirmation messages or instructions to inform the user to check the cutter) under the following conditions.

■ When a cutting error is detected for the first time after replacing the cutter.
■ When a cutting error is detected for the first time after a paper jam-related service call error occurs.
■ When a cutting error is detected for the first time after the printer runs the cutter failure confirmation sequence. If the sequence is carried out two times in a row, a cutting error message is displayed until the corrective action is taken.

1.4.4.33 BK Ink Change

This menu is provided for the Stylus Pro 7800 and Stylus Pro 9800. The printer displays instructions for replacing the Photo or Matte black cartridge with the other one on the LCD panel in accordance with operations made by the user.

NOTE: *The Stylus Pro 7400 and Stylus Pro 9400 are not equipped with this function. However, replacing the Matte black cartridge with Photo black one is available. (the printers display a confirmation message when the Photo black is inserted.) Note that the panel display and the status sheet do not reflect the ink change. The name of the black ink remains as "Matte black" even after replacing it with Photo black.*

1.4.4.34 Power Cleaning

The "Power Cleaning" is a function to clean the printhead more powerfully than normal head cleaning. As this includes cleaning the choke, an operator is required to move the ink lever in accordance with the panel message.

- Power Cleaning Triggers
  "Power Cleaning" is displayed on the LCD when any one of the following conditions are met.
  - After executing manual cleaning three times in a row.
  - When the printer is turned On after a lapse of 20 days or longer from the last Power Cleaning.
  - When the printer is turned On after an interval of one month or longer.

NOTE: *If a "Maintenance Tank Near Full" or "Ink Low" error occurs after performing the cleaning, press the [Enter ↵] button. The printer displays the error message for three seconds and then returns to the menu screen. If the Maintenance Tank error occurs during the cleaning, the cleaning is interrupted and cannot be continued unless taking a corrective action (replacing the tank or etc.).*

1.4.4.35 Clock Setting

This menu allows the user to set current date and time to correct the time difference. The set time is compared to the absolute control time maintained by the RTC power source, and the printer maintains the set time by keeping the difference between them. The set time is used for the Job Information.

This time setting is disabled if the time synchronization is adopted by the TypeB interface. And it is also disabled when the NTP is using the time synchronization (when date and time is entered, an error message is displayed for three seconds and the printer returns to the MAINTENANCE menu screen.)

1.4.4.36 Contrast Adjustment

The contrast of the LCD panel can be adjusted by this menu. The adjustable range is plus or minus 20 levels from the center value. The level decreases or increases by 1 level each time the [Paper Feed ▼ (▲)] button is pressed.

1.4.4.37 Head Alignment (Bi-D Adjustment, Uni-D Adjustment)

This function allows the user to make the Bi-D and Uni-D adjustments in accordance with the thickness of paper to be used. The adjustments can be carried out automatically by selecting the “Auto” in the “Alignment” menu. When the “Auto” is selected, the printer prints an adjustment pattern, checks the pattern, and make the adjustments according to the detected result automatically.

☐ Procedure

1. Set the paper.
2. Select the “Head Alignment” menu from the panel.
3. Select the “Standard” in the “Paper Thickness” menu if the paper is EPSON paper with thickness of 0.2 or 1.2 mm. If the paper does not fit the requirements, the thickness can be entered in increments of 0.1 mm.
4. Select “Auto” or “Manual” in the “Alignment” menu.
5. Select the pattern from “Uni-D”, Bi-D 2 Color”, and “Bi-D All” and execute it. “Printing” will be displayed on the LCD.
6. Check the printed adjustment pattern and enters the number of the line or block with the least displacement for each color.
7. Repeat Step 5 to 6 until the all three adjustments are completed.

   NOTE: *For details on the adjustment patterns, see* *“Head Alignment adjustment patterns (p. 98)”*.

☐ Adjustment Method

The printer calculates the Uni-D and Bi-D correction values based on the “Head Alignment” result, Platen Gap setting and the paper thickness.The correction values are classified by five Platen Gap settings (0.8mm/1.2mm/1.5mm/2.1mm/2.6mm) and stored on the NVRAM to create a table to be referred to from that time. The setting table is rewritten each time the adjustments are made.
The table below shows how the printer stores the settings.

Table 1-48. Storing the Correction Values

Paper Thickness Sensor	Paper Thickness Input	PG Settings	PG by adjustment pattern	Saved as	Remarks
Less than 0.8 mm	Standard	---	PG1.2 or PG1.6mm	Depends on the condition	*1
0.8 mm or more		---	PG 2.6 mm	For PG2.6 mm	*3
Less than 0.3 mm	0.1 - 0.8 mm	NARROW	PG 0.8 mm	For PG0.8 mm	---
		STANDARD	PG 1.2 mm	For PG1.2 mm	---
		WIDE	PG 1.6 mm	For PG1.5 mm	---
		WIDER	PG 2.1 mm	For PG2.1 mm	---
		WIDEST	PG 2.6 mm	For PG2.6 mm	---
	0.9 - 1.5 mm	---	PG 2.6 mm	For PG2.6 mm	*2
0.3 mm or more Less than 0.8 mm	0.1 - 0.8 mm	NARROW	PG 1.2 mm	For PG1.2 mm	---
		STANDARD	PG 1.2 mm	For PG1.2 mm	---
		WIDE	PG 1.6 mm	For PG1.5 mm	---
		WIDER	PG 2.1 mm	For PG2.1 mm	---
		WIDEST	PG 2.6 mm	For PG2.6 mm	---
	0.9 - 1.5 mm	---	PG 2.6 mm	For PG2.6 mm	*2
0.8 mm or more	0.0 - 1.5 mm	---	PG 2.6 mm	For PG2.6 mm	*3

Note "*1": [When performing Auto or Manual Bi-D Adjustment]

- The printer compares the default settings and the user-defined settings, and performs the following operations if it detects no difference between them.
  - Prints the adjustment pattern with PG 1.6-mm setting.
  - Stores the obtained correction values on the “For PG 1.6 mm” area. And creates correction values for PG 0.8, 1.2, 2.1, and 2.6 by adding offset values to the values for PG 1.6 mm and stores them on the corresponding area.
- The printer compares the default settings and the user-defined settings, and performs the following operations if it detects they are different from each other.
  - Prints the adjustment pattern with PG 1.2-mm setting and stores the obtained correction values on the “For PG 1.2 mm” area.

[When performing Auto Uni-D Adjustment]]

- The printer compares the default settings and the user-defined settings, and performs the following operations if it detects no difference between them.
  - Prints the adjustment pattern with PG 1.2-mm and PG 1.6 mm settings.
  - Stores the obtained correction values on the “For PG 1.2 mm” and “For PG 1.6 mm” areas. And copies the PG 1.2 values into the “For PG 0.8 mm” area, and PG 16 values into the “For PG 2.1” and “For PG 2.6” areas.
- The printer compares the default settings and the user-defined settings, and performs the following operations if it detects they are different from each other.

  Prints the adjustment pattern with PG 1.2-mm setting and stores the obtained correction values on the “For PG 1.2 mm” area.

[When performing Manual Uni-D Adjustment]

- Prints the adjustment pattern with PG 1.2-mm setting and stores the obtained correction values on the “For PG 1.2 mm” area.

"*2": Even when the paper thickness sensor detects thin paper (Less than 0.8mm), if the paper thickness input is 0.8mm or more, PG2.6mm is designated.

"*3": When the paper thickness sensor detects thick paper (0.8mm or more), regardless of PG setting and paper thickness input, PG2.6mm is designated. In such case, the Auto Bi-D adjustment cannot be made because the gap between the Ink-mark sensor and the platen goes beyond the recommended range.

Note
- The paper thickness is stored to adjust a paper thickness setting command PH in increments of 0.1 mm.
- As the printer can find an appropriate setting by paper thickness from the memory, entering the paper thickness first can reduce the subsequent operations.
- It is saved into saving place for paper thickness 0.0mm.
- It is saved into saving place for paper thickness 0.3mm.

Head Alignment menu

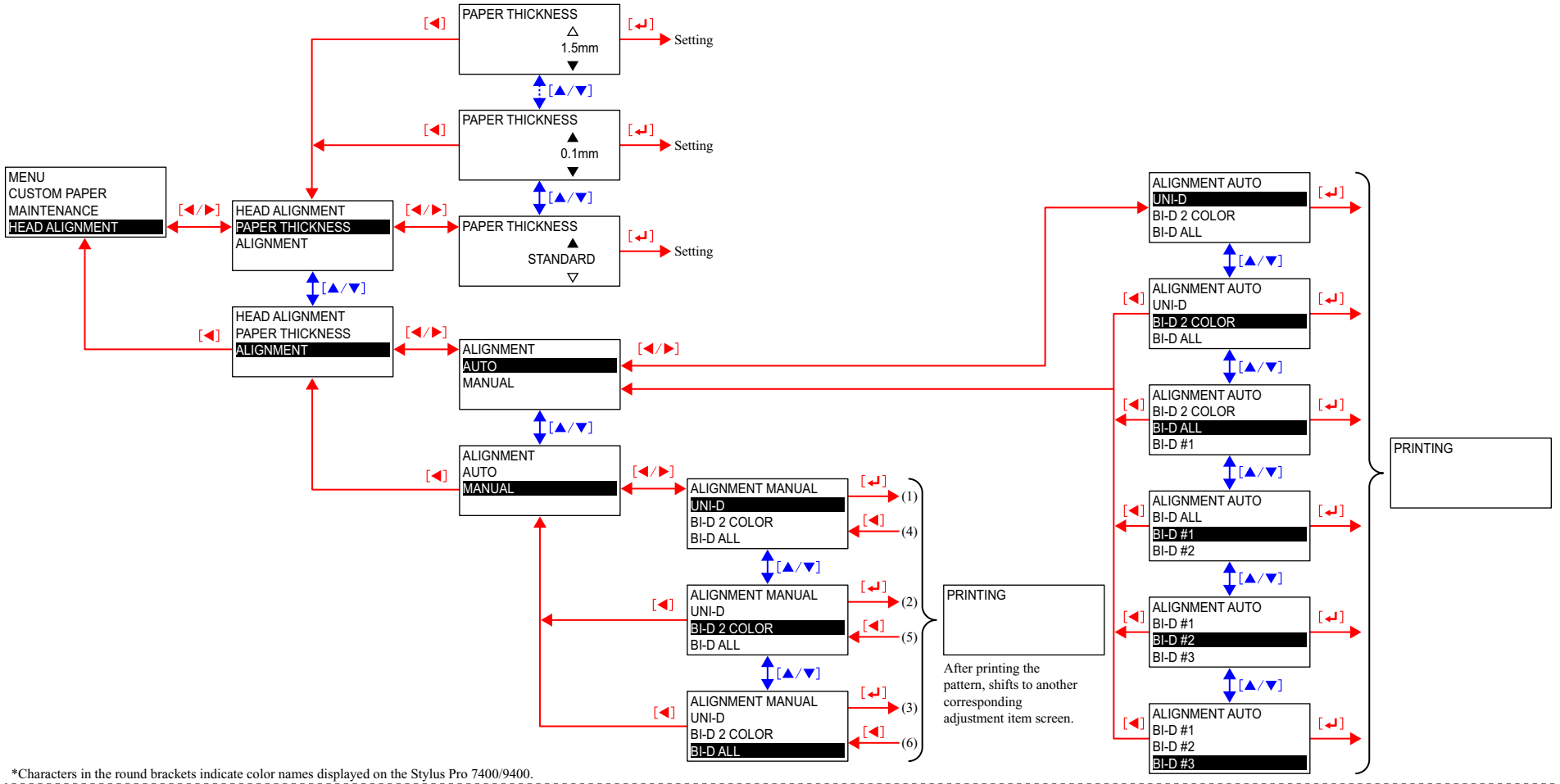

*Characters in the round brackets indicate color names displayed on the Stylus Pro 7400/9400.

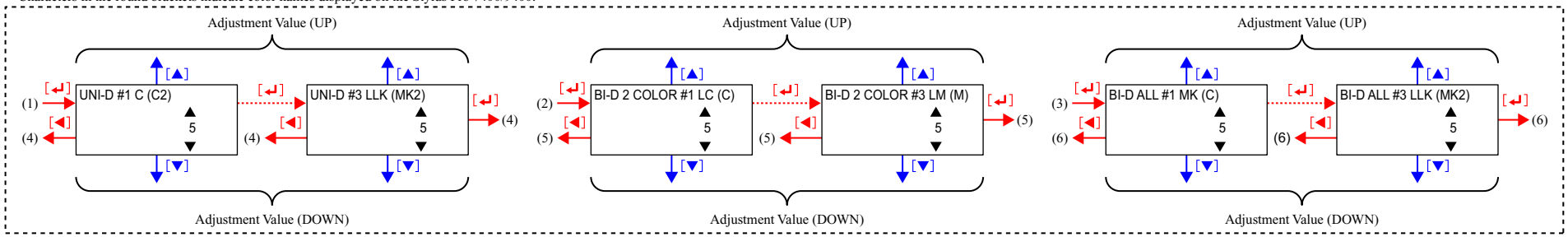

☐ Head Alignment adjustment patterns

■ Adjustment pattern print specifications

Adjustment pattern height	Bi-D 2-COLOR (#1, #2, #3)
	Bi-D All (#1, #2, #3)
	Uni-D (#1, #2, #3)
	AUTO BI-D 2-COLOR
	AUTO Uni-D All (#1, #2, #3)
	AUTO Uni-D (#1, #2, #3)
Others	When printing from the edge of the paper, 100 mm of roll paper or 50 mm of cut sheet is fed before starting printing.

■ Print mode for each adjustment pattern

Table 1-49. Each adjustment item

Adjustment item		Parameter	
		Head speed (CPS)	Dot size
Bi-D	#1	320	VSD1(Large Line/Middle Block)
	#2	240	VSD2(Large Line/Large Block)
	#3	240	VSD3(Large Line/Large Block)
Uni-D	#1	320	VSD1 (Large)
	#2	240	VSD2 (Large)
	#3	240	VSD3 (Large)

■ Adjustment pattern printing of each adjustment item

Number of printing patterns	9 Patterns (1 for each color)
Print direction	☐ Bar: Going back and forth every 4dot ☐ Block ■ Upper patterns: Leftward ■ Lower patterns: Rightward
Pattern interval	☐ Leftward: equal interval ☐ Rightward: Print No.5 to be always current setup value. Position is shifted in fixed quantities, with No. 5 as the standard.

■ Relationship between number and amount of shift during pattern printing

Print pattern number	1	2	3	4	5	6	7	8	9
Amount of shift n/1440inch (VSD1, VSD2, VSD4)	–4	–3	–2	–1	0	+1	+2	+3	+4

1.4.5 Maintenance Mode

OUTLINE

- Start Up
  The printer starts up in the Maintenance mode when it is turned ON with the [PAUSE] button pressed.
- Operation
  1. Confirm that the top menu of the Maintenance mode is displayed on the LCD panel.
  2. Highlight the target item using the [Paper Feed ▼ (▲)] buttons and press the [Menu ▶] button to display the menu screen for the selected item.
  3. Highlight the target item using the [Paper Feed ▼ (▲)] buttons and press the [Menu ▶] button to display the setting items or values.
  4. Use the [Paper Feed ▼ (▲)] button to change the numerical value. A setting item with an asterisk (*) on its right side is the current setting.
  5. Press the [Enter ↵] button to accept the change or execute the operation. Nothing happens If you select the item with the asterisk.
  6. Use the [Paper Select ◀] button to return to the previous menu and the top screen.
- Termination
  Turn the printer OFF and turn it back ON in the normal way.

- Panel display (Level structure of Maintenance Mode)

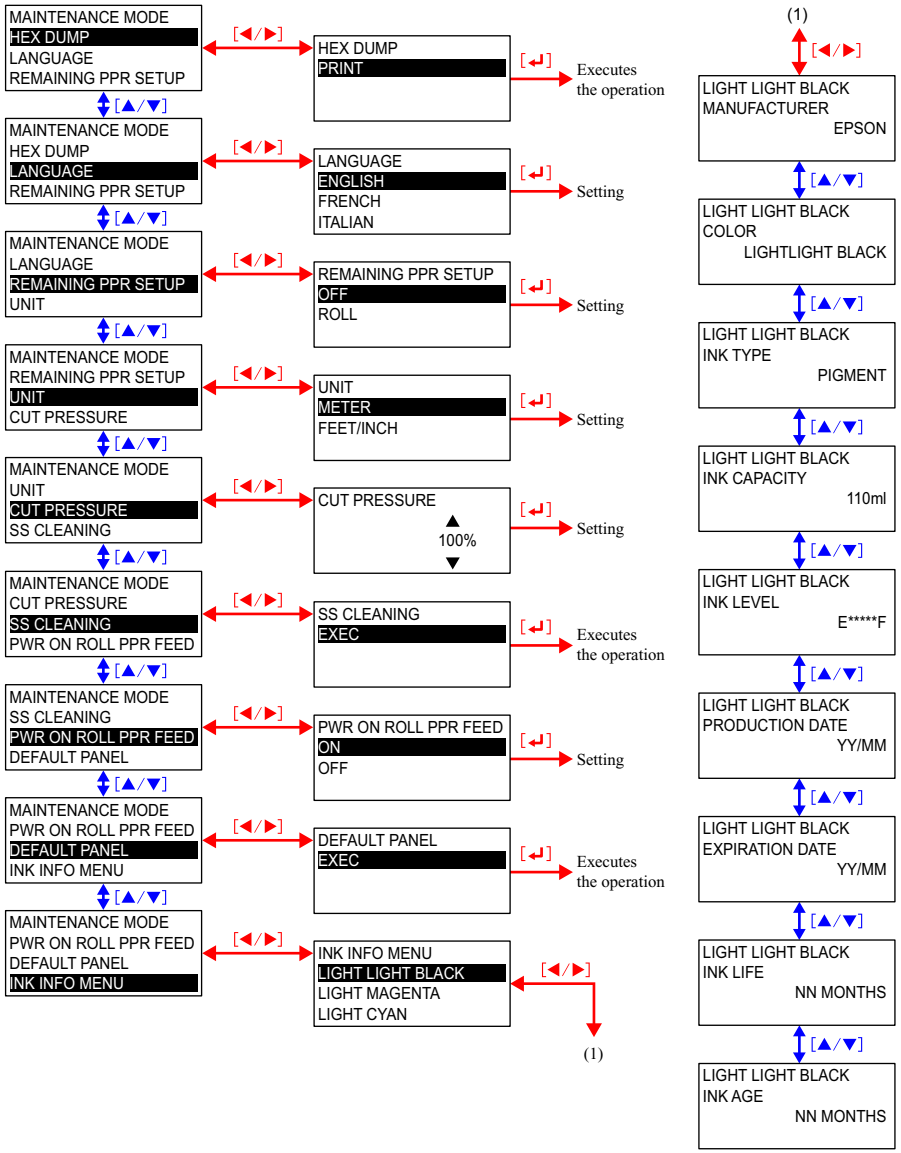

MAINTENANCE MODE SETUP ITEMS

Table 1-50. Maintenance Mode Setup Items

Top Menu	Panel Display	Item Menu 1	Panel Display	Item Menu 2	Panel Display	Setting Values
Hexadecimal Dump Printing	HEX DUMP	–	–	–	PRINTING	Print *1
Panel Display	LANGUAGE	–	–	–	–	**ENGLISH**, FRENCH, ITALIAN, GERMAN, SPANISH, PORTUGUESE, DUTCH
Paper Remaining Setting	REMAINING PPR SETUP	–	–	–	–	**OFF**, Roll paper ON
Unit Switching	UNIT	–	–	–	–	**METER**, FEET/INCH
Cutting Pressure	CUTTING PRESSURE	–	–	–	–	0% - **100%** - 150%
Supersonic Cleaning	SS CLEANING	–	–	–	–	EXEC
Roll Paper Feed at Power ON	PWR ON ROLL PPR FEED	–	–	–	–	**ON**, OFF
Initialize Panel Setting	DEFAULT PANEL	–	–	–	–	EXEC
Ink Information Menu	INK INFO MENU	Ink information 1st row 8-color equipment: LLK (4- color equipment : MK)	Light Gray (Matte Black)	Manufacture logo	MANUFACTURE	"EPSON"
				Ink color	COLOR	LIGHT LIGHT BLACK (MATTE BLACK)
				Ink type	INK TYPE	PIGMENT / DYE
				Ink capacity	INK CAPACITY	110ml / 220ml
				Ink remaining	INK LEVEL	E*****F, E**** F, E*** F, E** F, E* F, E F
				Product date	PRODUCTION DATE	<YY>/<MM>
				Expiry date	EXPIRATION DATE	<YY>/<MM>
				Ink life after open	INK LIFE	<MM> MONTHS
				Passed time after open	INK AGE	<MM> MONTHS
		Ink information 2nd row 8-color equipment : LM (4-color equipment : MK2)	Light Magenta (Matte Black)	Manufacture logo	MANUFACTURE	"EPSON"
				Ink color	COLOR	LIGHT MAGENTA
				Ink type	INK TYPE	PIGMENT / DYE
				Ink capacity	INK CAPACITY	110ml / 220ml
				Ink remaining	INK LEVEL	E*****F, E**** F, E*** F, E** F, E* F, E F
				Product date	PRODUCTION DATE	<YY>/<MM>
				Expiry date	EXPIRATION DATE	<YY>/<MM>
				Ink life after open	INK LIFE	<MM> MONTHS
				Passed time after open	INK AGE	<MM> MONTHS

Continued to next page

Table 1-50. Maintenance Mode Setup Items(continued)

Top Menu	Panel Display	Item Menu 1	Panel Display	Item Menu 2	Panel Display	Setting Values
Ink Information Menu	INK INFO MENU	Ink Information 3rd row 8-color equipment: LC (4-color equipment: M)	Light Cyan (Magenta)	Manufacture logo	MANUFACTURE	"EPSON"
				Ink color	COLOR	LIGHT CYAN (MAGENTA)
				Ink type	INK TYPE	PIGMENT / DYE
				Ink capacity	INK CAPACITY	110ml / 220ml
				Ink remaining	INK LEVEL	E*****F, E**** F, E*** F, E** F, E* F, E F
				Product date	PRODUCTION DATE	<YY>/<MM>
				Expiry date	EXPIRATION DATE	<YY>/<MM>
				Ink life after open	INK LIFE	<MM> MONTHS
				Passed time after open	INK AGE	<MM> MONTHS
		Ink Information 4th row 8-color equipment: LK (4-color equipment: M2)	Light Black (Magenta)	Manufacture logo	MANUFACTURE	"EPSON"
				Ink color	COLOR	LIGHT BLACK (MAGENTA)
				Ink type	INK TYPE	PIGMENT / DYE
				Ink capacity	INK CAPACITY	110ml / 220ml
				Ink remaining	INK LEVEL	E*****F, E**** F, E*** F, E** F, E* F, E F
				Product date	PRODUCTION DATE	<YY>/<MM>
				Expiry date	EXPIRATION DATE	<YY>/<MM>
				Ink life after open	INK LIFE	<MM> MONTHS
				Passed time after open	INK AGE	<MM> MONTHS
		Ink Information 5th row 8-color equipment: PK or MK (4-color equipment: C)	Matte Black or Matte Black (Cyan)	Manufacture logo	MANUFACTURE	"EPSON"
				Ink color	COLOR	PHOTO BLACK, MATTE BLACK (CYAN)
				Ink type	INK TYPE	PIGMENT / DYE
				Ink capacity	INK CAPACITY	110ml / 220ml
				Ink remaining	INK LEVEL	E*****F, E**** F, E*** F, E** F, E* F, E F
				Product date	PRODUCTION DATE	<YY>/<MM>
				Expiry date	EXPIRATION DATE	<YY>/<MM>
				Ink life after open	INK LIFE	<MM> MONTHS
				Passed time after open	INK AGE	<MM> MONTHS

Continued to next page

Table 1-50. Maintenance Mode Setup Items(continued)

Top Menu	Panel Display	Item Menu 1	Panel Display	Item Menu 2	Panel Display	Setting Values
Ink Information Menu	INK INFO MENU	Ink Information 6th row 8-color equipment: C (4-color equipment: C2)	Cyan (Cyan)	Manufacture logo	MANUFACTURE	"EPSON"
				Ink color	COLOR	CYAN (CYAN)
				Ink type	INK TYPE	PIGMENT / DYE
				Ink capacity	INK CAPACITY	110ml / 220ml
				Ink remaining	INK LEVEL	E*****F, E**** F, E*** F, E** F, E* F, E F
				Product date	PRODUCTION DATE	<YY>/<MM>
				Expiry date	EXPIRATION DATE	<YY>/<MM>
				Ink life after open	INK LIFE	<MM> MONTHS
				Passed time after open	INK AGE	<MM> MONTHS
		Ink Information 7th row 8-color equipment: M (4-color equipment: Y)	Magenta (Yellow)	Manufacture logo	MANUFACTURE	"EPSON"
				Ink color	COLOR	MAGENTA (YELLOW)
				Ink type	INK TYPE	PIGMENT / DYE
				Ink capacity	INK CAPACITY	110ml / 220ml
				Ink remaining	INK LEVEL	E*****F, E**** F, E*** F, E** F, E* F, E F
				Product date	PRODUCTION DATE	<YY>/<MM>
				Expiry date	EXPIRATION DATE	<YY>/<MM>
				Ink life after open	INK LIFE	<MM> MONTHS
				Passed time after open	INK AGE	<MM> MONTHS
		Ink Information 8th row 8-color equipment: Y (4-color equipment: Y2)	Yellow (Yellow)	Manufacture logo	MANUFACTURE	"EPSON"
				Ink color	COLOR	YELLOW (YELLOW)
				Ink type	INK TYPE	PIGMENT / DYE
				Ink capacity	INK CAPACITY	110ml / 220ml
				Ink remaining	INK LEVEL	E*****F, E**** F, E*** F, E** F, E* F, E F
				Product date	PRODUCTION DATE	<YY>/<MM>
				Expiry date	EXPIRATION DATE	<YY>/<MM>
				Ink life after open	INK LIFE	<MM> MONTHS
				Passed time after open	INK AGE	<MM> MONTHS

Note "*1": During executing hexadecimal dump mode, “Hexadecimal Dump Executing” is displayed.

HEX DUMP

Print data received by the printer is printed out in hexadecimal notation. Using this function, users can check that data has been sent correctly from the computer to the printer.
On the printout, 16 bytes of print data in hexadecimal are indicated on the left followed by the corresponding ASCII characters. If the hex number has no corresponding ASCII characters, such as control code, "." (period) is indicated instead of ASCII characters. The data is output (printed) in a 16-byte unit. If the last data is less than 16 bytes, it is not printed unless you press the [Pause] button.

Panel setting is not available in the hex dump mode.
To terminate the mode, stop printing by pressing [Pause] button and shut the power off.

LANGUAGE

The user interface language can be selected from English, French, Italian, German, Spanish, Portuguese and Dutch.

REMAINING PPR SETUP

Enables or disables the roll paper remaining amount detection function.

OFF: Disables the detection function.
The ROLL PAPER COUNTER of the PRINTER SETUP menu in the Panel Setting mode disappears.

ROLL: Enables the function.
The ROLL PAPER COUNTER of the PRINTER SETUP menu appears and the roll paper remaining amount can be checked there.

UNIT

Switches the unit of length used in the panel display and pattern printing between meter and feet/inch.

- METER: Meter (m)
- FEET/INCH: Feet (ft)/Inches (in)

The table below lists the items to which the unit change is reflected.

Table 1-51. Reflection of the Unit of Length Change

Item		Message	
		Meter	Feet/Inch
Panel LCD Display	Roll paper remaining value	xxm	xxxft
	Roll paper length	xx.xm	xxxft
	Roll paper length warning	xxm	xxft
	Paper counter	xxxxx.xcm	xxxxft xxin
	Job information display (Paper used amount)	xxxxxxxcm^2	xxxxxx.xsqft
Nozzle Check Pattern	Current Paper Count	xxxxx.xcm	xxxxft xxin
	Prev Paper Count	xxxxx.xcm	xxxxft xxin
Status Sheet	Use Paper	xxxxxx.xcm	xxxxft xxin
Job Information Print	Paper used (Vertical)	xxxxxx.xcm	xxxxft xxin
	Paper used (Horizontal)	xxxxxx.xcm	xxxxft xxin

CUT PRESSURE

The default Cut Pressure is set as 100% at the factory. It can be changed in the range of 0 through 150%. The percentage is referred to as the absolute level for the printer, so the Cut Pressure values specified in the following items are multiplied by the percentage.

- Remote command SN m1=81h
- CUSTOM PAPER (Panel Setting mode)

SS (SUPERSONIC) CLEANING

Executes a supersonic cleaning. (Executes CL3.)

PWR ON ROLL PPR FEED

Specifies the paper feeding operation at power-On when the Auto Roll Cut is Off.

ON: Feeds the specified amount of paper at power-ON
OFF Not performs feeding operation at power-ON.
(This allows you to save paper.)

NOTE: *Enabling this function can cause a direct print on the platen.*

DEFAULT PANEL

Resets the settings or information in the following menu items to their default or factory default.

- Printer Setup menu ⇒ Resets the settings to their default. (Except the settings in the ROLL PAPER COUNTER)
- Custom Paper settings ⇒ Deletes the all settings.
- Head Alignment settings ⇒ Resets the settings to their factory default.
- Maintenance menu ⇒ Returns “Clock Setting” to the absolute time controlled by RTC power.
- Printer Status menu ⇒ Resets the all status information.
- Rear AD adjustment value ⇒ Returns to their factory default.

INK INFO MENU

Displays the ink information recorded on the CSIC.

Table 1-52. Ink Information

Item	Explanation
EPSON logo	Displays the manufacturer of each ink cartridge.
Ink color	Displays the ink color for each ink cartridge.
Ink type	Displays the ink type (Dye/Pigment) for each ink cartridge.
Capacity spec.	Displays the cartridge capacity for each ink cartridge.
Ink remaining	Displays the remaining amount of ink in each ink cartridge.
Product date	Displays the product date as <YY>/<MM> for each ink cartridge.
Expiry date	Displays the ink expiry date for each ink cartridge.
Ink life after open	Displays the expiration date after opening the package for each ink cartridge.
Passed time after open	Displays the elapsed time after opening the pack for each ink cartridge.

1.4.6 SERVICEMAN MODE

OUTLINE

The SERVICEMAN MODE, consists of the SELF TESTING, the VIEW COUNTER, and the MAINT INFO, is intended to be used by a service personnel for servicing the printer.

- ☐ "1.4.6.1 Self Testing Menu (SELF TESTING)" *(p.106)*
- ☐ "1.4.6.2 Counter Display Menu (VIEW COUNTERS)" *(p.123)*
- ☐ "1.4.6.3 Maintenance Information Menu (MAINT INFO)" *(p.125)*

NOTE: *If the SELF TESTING has been selected when you enter the mode, the printer can receive a special remote command or command set at the factory and setting it or responding to it is available. However, if an operation is required to perform by the command, or if the command is a print data or firmware file, the operation of the printer is not guaranteed.*

- ☐ Startup
  The printer starts up in the SERVICEMAN MODE when it is turned ON with the [Pause], [Paper Feed ▼], and [Menu ▶] buttons hold down.
- ☐ Operation
  1. Confirm that the top menu of the SERVICEMAN MODE is displayed on the LCD panel.
  2. Highlight the target menu item using the [Paper Feed ▼ (▲)] button and press the [Menu ▶] button to display the menu screen for the selected item.
  3. Repeat Step 2 procedure for each sub menu screen until you reach the final screen of the selected menu. Some menu have five steps, so the operation is required to perform for four times at maximum.
  4. Highlight the target item in the final screen and press the [Enter] button to conduct a self test, perform the adjustment, or print a pattern.
  5. Use the [Paper Select ◀] button to return to the previous screen.
- ☐ Termination
  Turn the printer OFF and turn it back ON in the normal way.

1.4.6.1 Self Testing Menu (SELF TESTING)

This self testing menu is mainly intended to adjust the printer mechanism and correct adjustment parameters in the firmware.

Table 1-53. Self Testing Menu Items

1st Screen	2nd Screen		3rd Screen		4th Screen		5th Screen	
Panel Display	Panel Display	Description	Panel Display	Description	Panel Display	Description	Panel Display	Description
TEST	Version	Version display	F/W	Firmware version	---	---	---	---
			BOOT	BOOT version	---	---	---	---
			Param 1	NVRAM version (Guaranteed range for power failure)	---	---	---	---
			Param 2	NVRAM version (Non-guaranteed range for power failure)	---	---	---	---
			DipSW	Dip switch status	---	---	---	---
	Panel	Panel function check	Key	Key operation check	---	---	---	---
			LCD	LCD check	---	---	---	---
			LED	LED check	---	---	---	---
	Sensor	Sensor check	CR Origin	CR origin sensor	---	---	---	---
			Paper	Paper thickness sensor	---	---	---	---
			Lever	Paper lever sensor	---	---	---	---
			HeadSlide	PG origin sensor	---	---	---	---
			Pump	Pump phase sensor	---	---	---	---
			InkLvr	Left and right ink lever	---	---	---	---
			Cover	Front cover sensor	---	---	---	---
			MainteTank	Presence or absence of the Maintenance Tank*1	---	---	---	---
			INK NOT	Presence or absence of the ink cartridges	---	---	---	---
			EdgeAD	Edge sensor AD	---	---	---	---
			Edge2AD	IM sensor AD	---	---	---	---
			RearAD	Rear sensor AD	---	---	---	---
			Head Temp	Head temperature	---	---	---	---
			Drv. Temp	Driver temperature	---	---	---	---
			Ink Press	Pressure Sensor	---	---	---	---
			TAKE UP	Presence or absence of the take-up reel machine*2	---	---	---	---
	Encoder	Encoder check	CR	CR encoder	---	---	---	---
			PF	PF encoder	---	---	---	---

Continued to next page

Note "*1": ""Anti-home side" or "Home side" is displayed with the "Maintenance Tank" on the Stylus Pro 9400/9800. They are not displayed on the Stylus Pro 7400/7800.

"*2": Not displayed for the Stylus Pro 7400/7800.

Table 1-53. Self Testing Menu Items(continued)

1st Screen	2nd Screen		3rd Screen		4th Screen		5th Screen	
Panel Display	Panel Display	Description	Panel Display	Description	Panel Display	Description	Panel Display	Description
TEST	Fan	Check the fan operation	Paper (ALL)	All paper suction fan	---	---	---	---
			Paper (Duty)	Change the paper suction level	---	---	---	---
			Paper1	Paper suction fan1	---	---	---	---
			Paper2	Paper suction fan2	---	---	---	---
			Paper3	Paper suction fan3 *3	---	---	---	---
			Head Drv.	Cooling fan for the heatsink	---	---	---	---
	Elec.	Electric	Maintenance	Counter display	WasteInk	Waste ink counter *4	---	---
					WasteInk2	Waste ink counter 2 *5	---	---
					Wiper	Wiping times	---	---
					Rubing	Ruling times	---	---
					Lever	Paper Set Lever releasing frequency	---	---
					Cover	Front cover opening/closing frequency	---	---
					Ink Lever	Left and right ink lever operating frequency	---	---
					CR Motor	CR motor reciprocating times	---	---
					PF Motor	PF motor travel distance	---	---
					Print Number	Number of printed pages	---	---
					Cleaning	Cleaning times	---	---
					Fire A	Discharged amount of ink (A)	---	---
					Fire B	Discharged amount of ink (B)	---	---
					Fire C	Discharged amount of ink (C)	---	---
					Fire D	Discharged amount of ink (D)	---	---
					Fire E	Discharged amount of ink (E)	---	---
					Fire F	Discharged amount of ink (F)	---	---
					Fire G	Discharged amount of ink (G)	---	---
					Fire H	Discharged amount of ink (H)	---	---
					Cut	Cutting times	---	---
					Cut Sole	Cutter Solenoid operating frequency	---	---

Continued to next page

"*3": Not displayed for the Stylus Pro 7400/7800.

"*4": Home side

"*5": Anti-home side

Table 1-53. Self Testing Menu Items(continued)

1st Screen	2nd Screen		3rd Screen		4th Screen		5th Screen	
Panel Display	Panel Display	Description	Panel Display	Description	Panel Display	Description	Panel Display	Description
TEST	Elec.	Electric	Error	Serious errors are displayed	Error0	Error 0	---	---
					Error1	Error 1	---	---
					Error2	Error 2	---	---
					Error3	Error 3	---	---
					Error4	Error 4	---	---
					Error5	Error 5	---	---
					Error6	Error 6	---	---
	Cut Adj.	Adjusts the cut pressure	---	---	---	---	---	---
	Actuator 2	Actuator 2	Cutter Sol.	Cutter solenoid	---	---	---	---
			Pump Motor	Pump motor	---	---	---	---
			Regulator Sol.	Regulator solenoid	---	---	---	---
			Ink Press Motor	Pressure Motor	---	---	---	---
	Edge Sns Lvl	Measure the Edge sensor	---	---	---	---	---	---
	Auto Gap Adj.	Auto gap adjustment	Auto Uni D	Auto Uni-D	---	---	---	---
			Auto Bi-D PG 1.6	Auto Bi-D PG1.6	---	---	---	---
			Auto Bi-D PG 0.8	Auto Bi-D PG0.8	---	---	---	---
Adjustment	Fan	Suction fan function check	---	---	---	---	---	---
	Paper	Adjusts the Paper Thickness sensor	---	---	---	---	---	---
	RearAD	Rear AD adjustment	---	---	---	---	---	---
	Check Nozzle	Check the head nozzles	Output Pattern	Prints a pattern	---	---	---	---
	Cutter	Check the cut position	---	---	---	---	---	---
	IM Sensor	Adjust the sensitivity of the Ink-mark sensor	---	---	---	---	---	---
	Platen Pos.	Platen position adjustment	---	---	---	---	---	---
	Platen Pos. Chk.	Platen position check	---	---	---	---	---	---
	Rear Sens. Pos.	Corrects the Rear sensor position	---	---	---	---	---	---
	CR Head Slant	CR Head Alignment	---	---	---	---	---	---

Continued to next page

Table 1-53. Self Testing Menu Items(continued)

1st Screen	2nd Screen		3rd Screen		4th Screen		5th Screen	
Panel Display	Panel Display	Description	Panel Display	Description	Panel Display	Description	Panel Display	Description
Adjustment	PF Head Slant	PF head alignment	PF Head Bid Adj.	Bi-D adjustment (PG1.2 VSD1)	---	---	---	---
			PF Head Slant	Adjust the PF head alignment	---	---	---	---
	Gap Adj.	Gap adjustment	ALL	ALL	Print	Print	---	---
					Input	Value can be input	---	---
			Uni-D	Uni-D	VSD1	VSD1	Print	Print
							Input	Value can be input
					VSD2	VSD2	Print	Print
							Input	Value can be input
					VSD3	VSD3	Print	Print
							Input	Value can be input
			Bi-D PG1.6	Bi-D PG1.6	VSD1	VSD1	Print	Print
							Input	Value can be input
					VSD2	VSD2	Print	Print
							Input	Value can be input
					VSD3	VSD3	Print	Print
							Input	Value can be input
			Bi-D PG0.8	Bi-D PG0.8	VSD1	VSD1	Print	Print
							Input	Value can be input
					VSD2	VSD2	Print	Print
							Input	Value can be input
					VSD3	VSD3	Print	Print
							Input	Value can be input
	Check Skew	Paper skew check	–	–	---	---	---	---
	Feed Adj. + T&B	Paper feed amount and top/ bottom margins adjustment	–	–	---	---	---	---
	IM Tresh.	Adjusts the position of the Ink-mark sensor	–	–	---	---	---	---
	Adj.Variable	Prints the adjustment parameters	–	–	---	---	---	---
	Pump Cnt.	Pump counter check	–	–	---	---	---	---

TEST MENU

Version Display

The versions of the following items can be checked.

☐ Firmware version

Refer to "1.4.4.22 Firmware Version" *(p.79)* for the display.

☐ BOOT version

The version is displayed as shown below.

- SWTddym
- SNTddym

*Explanation

- SWT: Stylus Pro 9400/9800
- SNT: Stylus Pro 7400/7800
- dd: Date is expressed by two decimal digits
- y: The last digit of the year is expressed by decimal number
- m: Month is expressed by one hexadecimal digit

☐ NVRAM version

NVRAM version stored in each of the guaranteed and non-guaranteed areas for power failure are displayed.

☐ DIP switch

Displays the DIP switch status.

Panel Function Check

This function allows you to check the operation of the buttons, LCD and LEDs on the panel. To exit the panel function check, press the [Pause] switch twice.

☐ Button operation check

When a button is pressed, the corresponding button name shown in the table below is displayed if the button works normally.

Switch	LCD
Pause	Printable
Paper Select ◀	Paper
Paper Feed ▲	PaperRoad +
Paper Feed ▼	PaperRoad -
Menu ▶	PanelSet
Enter ↵	Enter

☐ LCD check

All over the LCD is lighted up to visually check the LCD for dot missing.

☐ LED check

The four LEDs light by turns displaying the corresponding LED name shown in the table below on the LCD panel.

LED	LCD
Power source	Power
Pause	Printable
Paper	Paper
Ink	Ink

Sensor Check

The status of the following sensors can be checked.

Table 1-54. Sensor Statuses

Sensor Name	Remark
CR origin sensor	---
Paper thickness sensor	Explanation of the displayed number • 00: Paper thickness is 0.3mm or less • 10: Paper thickness is 0.4mm to 0.8mm • 11: Paper thickness is more than 0.9mm • 01: Paper Set Lever is released
Paper lever sensor	---
PG origin sensor	---
Pump phase sensor	---
Left and right ink lever sensor	---
Front cover sensor	---
Presence or absence of the Maintenance Tank	The anti-home side tank is not displayed on the Stylus Pro 7400/7800.
Presence or absence of the Ink Cartridges	The status is displayed by each color. • Slot number is displayed: Not installed • Slot number is Not displayed: Installed
Edge sensor AD	The displayed values are: • Difference between ON and OFF statuses (Displayed on the center of the screen) • Values at ON status (Displayed on the right side)
IM sensor AD	
Rear sensor AD	
Head temperature	---
Driver temperature	---
Pressure sensor	---
Presence or absence of the Take-up reel machine	This is not displayed on the Stylus Pro 7400/7800.

Encoder Check

The travel of each motor for CR shaft (Carriage) and PF shaft (Paper Feed) can be confirmed by the slid (encoder) value which is displayed in encoder pulse.

Fan Operation Check

The operation of each fan is can be checked.

NOTE 1: *"Paper3" (paper suction fan 3) is not displayed on the Stylus Pro 7400/7800.*

2: *Paper suction fan located at the Carriage home side is referred to as Paper suction fan 1. "Fan 2" is the center one, and the one at the anti-home side is "Fan 3".*

Electric

Fatal errors of up to 7 maintenance items recorded as history can be checked. (CPU error is not recorded.)

- Counter display

  The counters shown in the table below are displayed. The number is displayed in hexadecimal.

Table 1-55. Counter Display Items and Units

Maintenance	Unit
Waste ink counter	0.02g
Waste ink counter 2	0.02g
Wiping times	Number of times
Rubbing times	Number of times
Paper Set Lever releasing frequency	Number of times
Front cover opening/closing frequency	Number of times
Left and right Ink Lever operating frequency	Number of times
CR motor reciprocating times	Number of times
PF motor travel distance	TBD
Number of printed pages	Number of print
Cleaning times	Number of times
Discharged amount of ink (A to H columns)	Mega dot
Cutting times	Number of times
Cutter Solenoid operating frequency	Number of times

- Serious errors display

  Displays error codes of fatal errors. The latest error is 0 and 7 errors are recoreded in 0 to 6.

Cutting Pressure Adjustment

Adjusts the cutter pressure of the cutter. The pressure can be set in increments of 1%.

Actuator 2

This allows you to check the operation of the Cutter Solenoid, Pump motor, Regulator Solenoid, and Pressure motor. When you return to the menu screen after the checking is completed, “Please Turn Off” is displayed on the LCD panel.

Edge Sensor Level Measurement

Measures the platen level (reflecting amount) detected by the paper edge sensor. When paper is on the rear sensor, the sensor detects the paper width and obtains information for each paper type. If paper is not on the rear sensor, the sensor obtains information for each paper type at previous paper width detection.
Panel operations are disabled during executing the measurement. The measured result is displayed as shown in the table below.

No measurement paper	Minimum measurement value	Minimum value detection position	Maximum measurement value	Maximum value detection position
Threshold value at paper detection	Paper presence at paper detection	Paper absence at paper detection	D/A value used at paper detection	OK/NG

The platen level measurement is conducted from the home side to the anti-home side. When it is completed, the Carriage moves to the position where the highest level (reflection) is detected and stops there for three seconds.

Automatic Gap Adjustment

Makes Uni-D and Bi-D (PG 1.6mm/PG 0.8mm) adjustments.
This function automatically prints adjustment patterns in Uni-D and Bi-D, and detects the highest density point on the printed patterns to automatically reflects the Uni-D and Bi-D correction values.
The correction value for the Bi-D (PG 0.8 mm) is copied for the Bi-D (PG 1.2 mm) and the Bi-D (PG 1.6mm) correction value is copied for the Bi-D (PG 2.1mm/PG2.6mm)

ADJUSTMENT

Paper Suction Function

☐ Operation check

The two or three paper suction fans can be checked individually if they work normally. Selected fan operates for the set time period and repeats the operation until the [Pause] button is pressed.

■ Stylus Pro 7400/7800

Fan selection	Operating Time
FAN 1, 2	100 ms
↓	
FAN 1 only	1,800 ms
↓	
FAN 1, 2	100 ms
↓	
FAN 2 only	1,800 ms

■ Stylus Pro 9400/9800

Fan selection	Operating time
FAN 1, 3	100 ms
↓	
FAN 1 only	1,800 ms
↓	
FAN 1, 2	100 ms
↓	
FAN 2 only	1,800 ms
↓	
FAN 2, 3	100 ms
↓	
FAN 3 only	1,800 ms

☐ Suction adjustment

Each fan's suction level can be adjusted in increments of 2%.

Paper Thickness Sensor Adjustment

The sensor can be adjusted.
The meaning of the displayed numbers is as follows:

- 00: Paper thickness 0.3mm or less
- 10: Paper thickness is within 0.4mm to 0.8mm
- 11: Paper thickness is 0.9mm or more
- 01: Paper Set Lever is released

Rear AD Adjustment

Detects and set the best resistance value of the rear sensor.
After the detection, the D/A adjustment value, ON-OFF difference, and ON level are displayed in that order from the left. When a detection error occurs due to failure of the sensor or circuit, or absence of paper, the error is displayed on the LCD.

Head Nozzle Check

This function allows you to check the nozzles by a printed pattern if they discharge ink normally. Load paper on the printer before executing the check.
If a “Ink Low” or “Ink Out” status is detected, the printer requires to replace the ink cartridge before printing the pattern.

NOTE: *The pattern is printed even if the initial ink charge is not performed yet.*

☐ Head nozzle check pattern

■ Items to be checked

- Discharging conditions (dot missing, broken lines, meandering)
- Satellite
- Timing Fence
- Horizontal alignment
- Vertical alignment

■ Pattern (See Table 1-56 *(p.115)* for details on which color is discharged from which nozzles)

- Ink discharging check
  The pattern is printed in the order of E, F, G, H, D, C, B, and A row from the left.

  Print mode: 360dpi, Uni-D, VSD1, 320cps, Small

Printed Information	Description
Version	Firmware version currently installed on the printer
Maintenance Tank	Available capacity of the Maintenance tank
HeadRank ID	Head rank ID stored on the printer
Color ID	Colorimetric calibration values stored on the printer

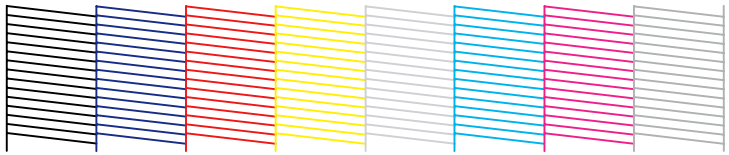

Figure 1-24. Head Nozzle Check Pattern

- Horizontal alignment check
  The pattern is printed in the order of E, F, G, H, D, C, B, and A row from the left.

  Print mode:
  360dpi, Uni-D, 320cps, VSD1, Large
  360dpi, Uni-D, 320cps, VSD2, Large
  360dpi, Uni-D, 320cps, VSD3, Large and Middle is printed alternately

Figure 1-25. Horizontal Alignment Check Pattern

- Vertical alignment check
  First the pattern is printed in the order of E, F, G, H, D, C, B, and A row from the left while the Carriage moves from its home to the anti-home end. And while the Carriage is returning to the home, the pattern is printed in the reverse order.

  Print mode: 360dpi, Bi-D, 320cps, VSD1
  360dpi, Bi-D, 320cps, VSD2
  360dpi, Bi-D, 320cps, VSD3
  (Large, middle, and small dot sizes used in that order in each mode.)

Figure 1-26. Vertical Alignment Check Pattern

■ Nozzle Rows and Ink Colors

Table 1-56. Nozzle Rows and Ink Colors

Nozzle Row	Ink Color	
	Stylus Pro 7800, Stylus Pro 9800	Stylus Pro 7400, Stylus Pro 9400
A	Light Light Black	Matte Black
B	Light Magenta	
C	Light Cyan	Magenta
D	Light Black	
E	Photo Black, Matte Black	Cyan
F	Cyan	
G	Magenta	Yellow
H	Yellow	

Cut Position Check

Performs a cut operation with default setting to be checked if the cut position is accurate or not.

Ink-mark Sensor Sensitivity Check

An amount of light emitted from the Ink-mark sensor for the loaded paper can be adjusted. The result is displayed as shown in the table below.

PW1:	GAIN I/O	D/A correction value	A/D correction value	A/Dcorrection value(2)
PW2:	GAIN I/O	D/A correction value	A/D correction value	---

Home to Anti-home side

Anti-home to Home side

Platen Position Adjustment

The position of each ink pad on the platen can be detected and adjusted.

Print mode: 360dpi, Uni-D, 320cps, VSD1, Large

Figure 1-27. Platen Position Adjustment Pattern

Enter the shift length obtained by the pattern with "-" (minus) mark if the pad is shifted toward the home side, or put "+" (plus) mark if it is shifted toward the anti-home side.

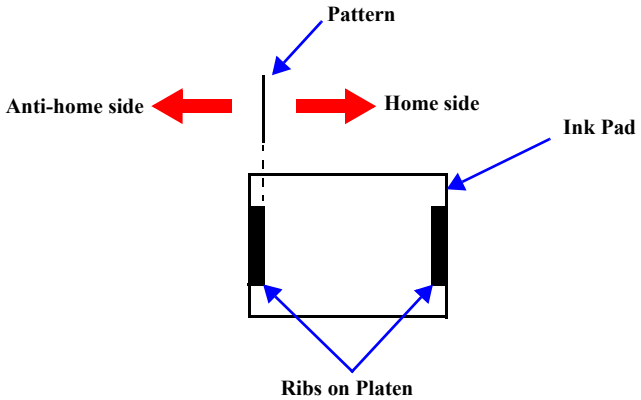

Platen Position Check

The position of each ink pad on the adjusted platen can be checked.

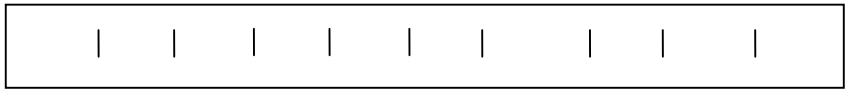

Print mode: 360dpi, Uni-D, 320cps, VSD1, Large

Figure 1-28. Platen Position Adjustment Pattern

Check if the printed lines correspond to left and right edges of each ink pad.

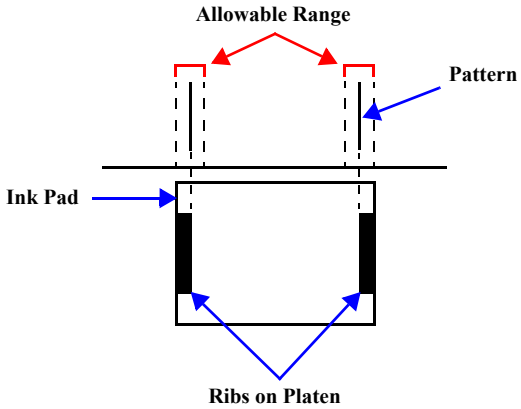

Rear Sensor Position Adjustment

Rear sensor position setting in the firmware can be adjusted to detect cut sheet length accurately (to ensure the maximum printable area on the bottom of the sheet).
Load A3-size cut sheet paper in portrait orientation. A horizontal black 1-dot width line is printed at the position 14 mm away from the bottom edge. Measure the distance between the line and the bottom edge, and enter the actual length as a correction value. When this item is selected, the printer requires to load a cut sheet paper even if a cut sheet is already set in the printer.

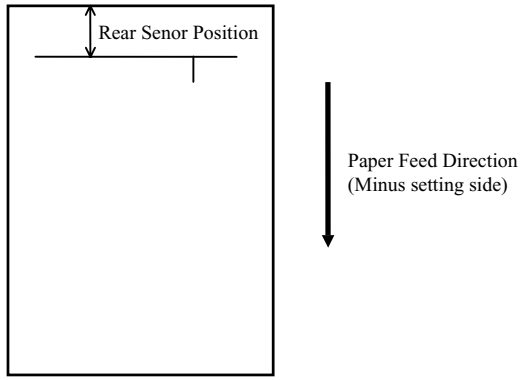

Print mode: 360dpi, Uni-D, 320cps, VSD1, Small

Figure 1-29. Rear Sensor Position Adjustment

CR Head Alignment

This function allows you to check by a printed pattern if the CR head is tilted or not. A mechanical adjustment is required if the CR head is judged as tilted.

Checking the CR Head for tilting

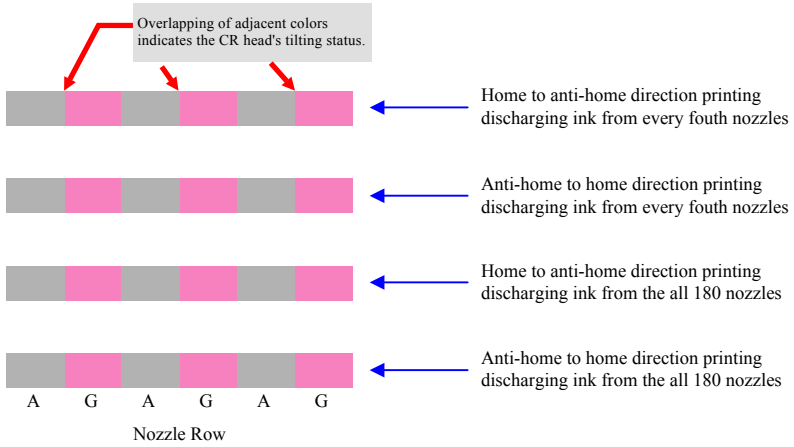

Print mode: 360dpi, Bi-D, 240cps, VSD2, Small

Figure 1-30. CR Head Alignment Check Pattern

Table 1-57. Nozzle Row and Ink Color

Nozzle Row	Ink Color	
	Stylus Pro 7800, Stylus Pro 9800	Stylus Pro 7400, Stylus Pro 9400
A	Light Light Black	Matte Black
G	Magenta	Yellow

PF Head Alignment

The alignment of the PF head can be adjusted by a printed pattern that consists of waved Bi-D patterns.

- ☐ Bi-D adjustment (reference row)

  Bi-D adjustment VSD1 reference row can be adjusted.

- ☐ PF Head Alignment adjustment

  Observe the printed pattern and judge if the PF head is tilted or not. A mechanical adjustment is required if the PF head is judged as tilted.

Checking the PF Head for tilting

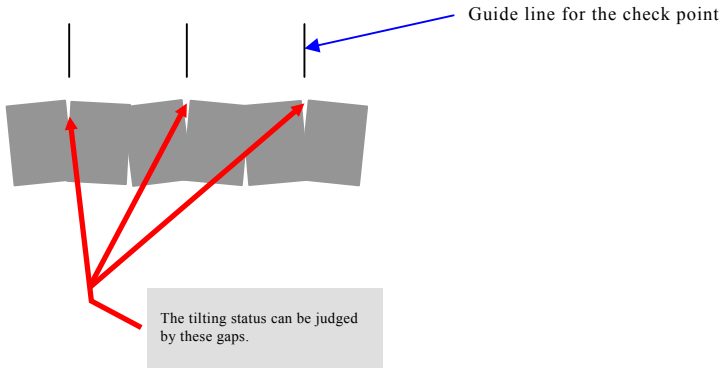

Print mode: 360dpi, Bi-D, 320cps, VSD1, Small

Figure 1-31. PF Head Alignment Check Pattern

Gap Adjustment

The Uni-D and Bi-D (PG 0.8/PG 1.6mm) can be adjusted.
The adjustments can be made by entering a number printed with the adjustment patterns.
Correction values for Bi-D (PG 0.8 mm) are copied for Bi-D (PG 1.2 mm) and those for Bi-D (PG 1.6 mm) are copied for Bi-D (PG 2.1 mmm/PG 2.6 mm).

- Gap adjustment (All Items)
  The Uni-D and Bi-D (PG 1.6mm/PG 0.8mm) adjustment patterns are printed at the same time and the correction values can be entered on the same screen.

Uni-D pattern (VSD1)	**Prints Figure 1-34 in VSD1 mode**
Uni-D pattern (VSD2)	**Prints Figure 1-34 in VSD2 mode**
Uni-D pattern (VSD3)	**Prints Figure 1-34 in VSD3 mode**
Bi-D pattern (PG1.6: VSD1)	**Prints Figure 1-36 in PG1.6 : VSD1 mode**
Bi-D pattern (PG1.6: VSD2)	**Prints Figure 1-36 in PG1.6 : VSD2 mode**
Bi-D pattern (PG1.6: VSD3)	**Prints Figure 1-36 in PG1.6 : VSD3 mode**
Bi-D pattern (PG0.8: VSD1)	**Prints Figure 1-36 in PG0.8 : VSD1 mode**
Bi-D pattern (PG0.8: VSD2)	**Prints Figure 1-36 in PG0.8 : VSD2 mode**
Bi-D pattern (PG0.8: VSD3)	**Prints Figure 1-36 in PG0.8 : VSD3 mode**

S/N: _____ Sign: _____ DATA: _____

The serial number is printed if it is stored on the NVRAM.
If it is not stored, only the underline is printed.

Figure 1-32. Gap Adjustment (All Items) Pattern List

- Gap adjustment (Uni-D)
  A Uni-D pattern is printed. Enter a number of the most neatly printed lines.

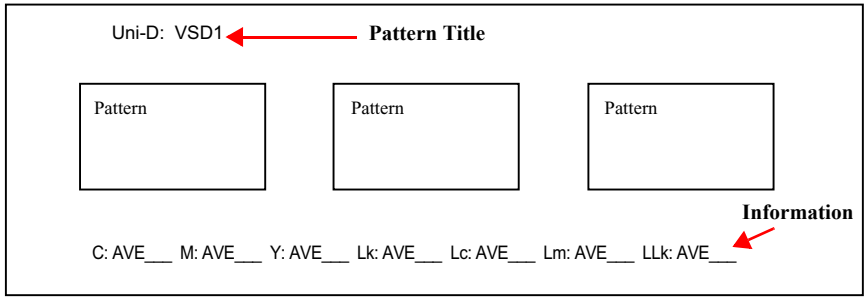

Note : Number of Uni-D pattern blocks aligned within the paper width differ between the wide and narrow models:
The Stylus Pro 9400/9800: three pattern blocks for each waveform
The Stylus Pro 7400/7800: two pattern blocks for each waveform

Figure 1-33. Gap Adjustment (Uni-D) Pattern

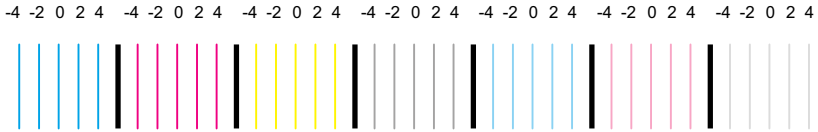

- Print mode:
  - VSD1: 360dpi, Uni-D, 320cps, VSD1, Large
  - VSD2: 360dpi, Uni-D, 240cps, VSD2, Large
  - VSD3: 360dpi, Uni-D, 240cps, VSD3, Large

Figure 1-34. Closeup of the Uni-D Pattern

Table 1-58. Pattern Title

Waveform	Pattern Title
VSD1	Uni-D: VSD1
VSD2	Uni-D: VSD2
VSD3	Uni-D: VSD3

Table 1-59. Information

Model	Information Printed with the Patterns
Stylus Pro 7800, Stylus Pro 9800	C: AVE__ M: AVE__ Y: AVE__ Lk: AVE__ Lc: AVE__ Lm: AVE__ LLk: AVE__
Stylus Pro 7400, Stylus Pro 9400	C: AVE__ Y: AVE__ Y - 2: AVE__ M: AVE__ M - 2: AVE__ PK: AVE__ PK - 2: AVE__

☐ Gap adjustment (Bi-D)
A Bi-D (PG 1.6mm/PG 0.8mm) pattern is printed. Enter a number of the most neatly printed lines.

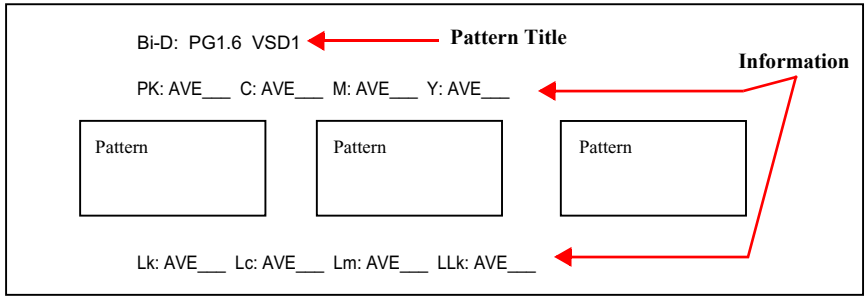

Note : Number of Bi-D pattern blocks aligned within the paper width differ between the wide and narrow models:
The Stylus Pro 9400/9800: three pattern blocks for each waveform
The Stylus Pro 7400/7800: two pattern blocks for each waveform

Figure 1-35. Gap Adjustment (Bi-D) Pattern

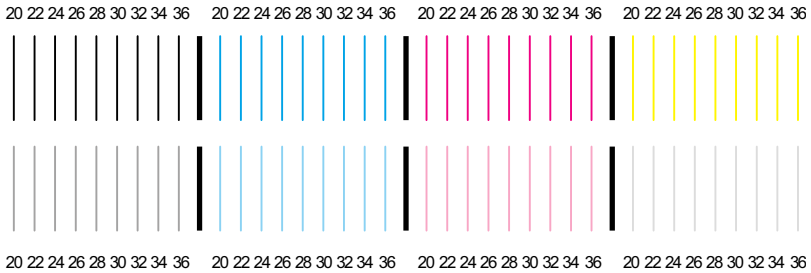

☐ Print mode:
- VSD1: 360dpi, Bi-D, 320cps, VSD1, Large
- VSD2: 360dpi, Bi-D, 240cps, VSD2, Large
- VSD3: 360dpi, Bi-D, 240cps, VSD3, Large

Figure 1-36. Closeup of the Bi-D Pattern

Table 1-60. Pattern Title

PG	Waveform	Pattern Title
1.6 mm	VSD1d	Bi-D: PG1.6 VSD1
	VSD2d	Bi-D: PG1.6 VSD2
	VSD3	Bi-D: PG1.6 VSD3
0.8 mm	VSD1	Bi-D: PG0.8 VSD1
	VSD2	Bi-D: PG0.8 VSD2
	VSD3	Bi-D: PG0.8 VSD3

Table 1-61. Information

Printing Position	Model	Information Printed with the Patterns
Above the pattern	Stylus Pro 7800, Stylus Pro 9800	PK: AVE____ C: AVE____ M: AVE____ Y: AVE____
	Stylus Pro 7400, Stylus Pro 9400	C: AVE____ C-2: AVE____ Y: AVE____ Y-2: AVE____
Below the pattern	Stylus Pro 7800, Stylus Pro 9800	Lk: AVE____ Lc: AVE____ Lm: AVE____ LLk: AVE____
	Stylus Pro 7400, Stylus Pro 9400	M: AVE____ M-2: AVE____ MK: AVE____ MK-2: AVE____

Paper Skew Check

Loaded paper is fed by the set amount (one bus) at one time. Positions of the paper edge before and after the feeding is detected by sensors and checked if they are the same or not.
Specify a paper feeding amount (length) after the printer finishes a paper initialization operation. The left edge of the paper is detected by the Edge sensor and the difference from the value detected before feeding is displayed.
If a paper detection error before or after the feeding occurs, or if the Rear sensor detects that the paper is not on it during the feeding, a paper error is displayed on the LCD. In such case, press any of the buttons to exit the menu.

NOTE 1: *A criterion for judging if paper is skewed or not is determined in the firmware according to the left edge position detected by the Edge sensor.*

2: *If the Paper Check LED flashes or lights with paper loaded, a paper detection error is occurring. Release and reset the Paper Set Lever to clear the error.*

3: *If "99.999 mm" is displayed as the result, check the following items and retry the operation. They can cause the invalid result.*

- *Position of left or right edge of paper changed 3 mm or more.*
- *The distance between the K nozzle row and the right edge of paper when the Carriage is in its home is less than 142.0 mm. (the paper is too close to the home side.)*
- *The Paper Set Lever is released or the front cover is opened while feeding paper.*

Band Feed and Top & Bottom Margins Adjustment

An amount (length) of paper feeding at a time (Band feed), and the top, bottom, and side margins can be adjusted.
A band is printed on each top and bottom sides of paper. By entering the interval between the two bands, the PF encoder resolution set in the firmware is automatically adjusted.
The top and bottom adjustment can be made by entering measured distances between Edge sensor and printhead, between the cutter and printhead, and between Edge sensor and printhead.

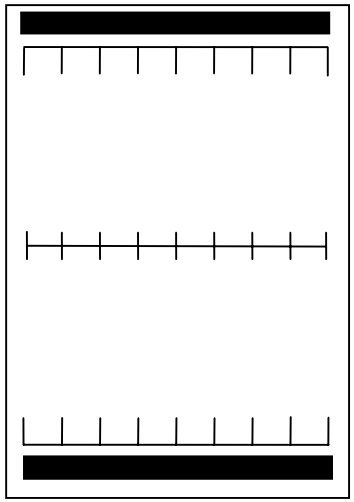

- Adjustment Items
  - Band feed adjustment: adjusts paper feed amount
  - T & B adjustment
    - Top margin
      Between Edge sensor and printhead (paper feed direction)
    - Bottom margin
      Between cutter and printhead (Carriage moving direction)
    - Left and right margin
      Between Edge sensor and printhead (paper feed direction)

Figure 1-37. Between Edge sensor and printhead (paper feed direction)

Table 1-62. Positions of Printed Lines

360dpi-based Intervals	On a millimeter basis	360dpi-based Intervals	On a millimeter basis
0	0	8583	Approx. 600
1417	Approx. 100	9921	Approx. 700
2834	Approx. 200	11338	Approx. 800

Table 1-62. Positions of Printed Lines

360dpi-based Intervals	On a millimeter basis	360dpi-based Intervals	On a millimeter basis
4251	Approx. 300	12755	Approx. 900
5669	Approx. 400	14173	Approx. 1000
7086	Approx. 500	---	---

Ink-mark Sensor Position Adjustment

The position of the Ink-mark sensor can be adjusted and checking the sensor for detecting ability can be made.

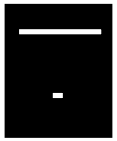

[PG=1.2]

Multi-Sensor Position Adjust		PG0.8mm	PG1.2mm	PG2.1mm	PG2.6mm
Horizontal [mm]	:	-1.3	-1.3	0.0	0.0
Vertical [mm]	:	0.4	0.4	0.0	0.0

Print mode: 360dpi, Bi-D, 320cps, VSD1, Large

Figure 1-38. Ink-mark Sensor Position Adjustment Pattern

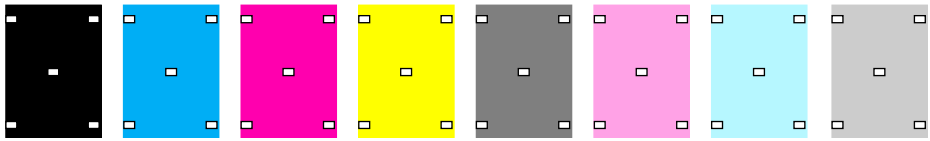

[PG=1.2]

[Count]	MK:5	C :5	M :5	Y :5	LLk:5	Lm:5	LC:5	Lk:5
[Position] MK :	(1, 3),	(9, 3),	(5, 13),	(1, 22),	(9, 22),	(0, 0),		
	(0, 0),	(0, 0),	(0, 0),	(0, 0),	(0, 0),	(0, 0)		
[Position] C :	(1, 3),	(9, 3),	(5, 13),	(1, 22),	(9, 22),	(0, 0),		
	(0, 0),	(0, 0),	(0, 0),	(0, 0),	(0, 0),	(0, 0)		
[Position] M :	(1, 3),	(9, 3),	(5, 13),	(1, 22),	(9, 22),	(0, 0),		
	(0, 0),	(0, 0),	(0, 0),	(0, 0),	(0, 0),	(0, 0)		
[Position] Y :	(1, 3),	(9, 3),	(5, 13),	(1, 22),	(9, 22),	(0, 0),		
	(0, 0),	(0, 0),	(0, 0),	(0, 0),	(0, 0),	(0, 0)		
[Position] LLk :	(1, 3),	(9, 3),	(5, 13),	(1, 22),	(9, 22),	(0, 0),		
	(0, 0),	(0, 0),	(0, 0),	(0, 0),	(0, 0),	(0, 0)		
[Position] Lm :	(1, 3),	(9, 3),	(5, 13),	(1, 22),	(9, 22),	(0, 0),		
	(0, 0),	(0, 0),	(0, 0),	(0, 0),	(0, 0),	(0, 0)		
[Position] Lc :	(1, 3),	(9, 3),	(5, 13),	(1, 22),	(9, 22),	(0, 0),		
	(0, 0),	(0, 0),	(0, 0),	(0, 0),	(0, 0),	(0, 0)		
[Position] Lk :	(1, 3),	(9, 3),	(5, 13),	(1, 22),	(9, 22),	(0, 0),		
	(0, 0),	(0, 0),	(0, 0),	(0, 0),	(0, 0),	(0, 0)		

Print mode: 360dpi, Bi-D, 320cps, VSD1, Large

Figure 1-39. Ink-mark Sensor Operation Check Pattern

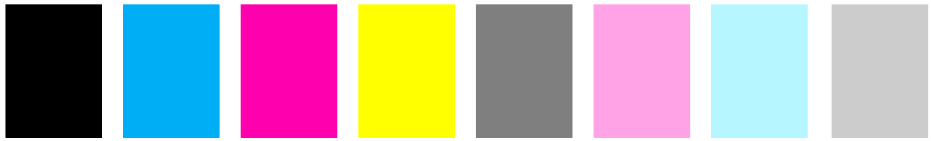

```
[PG=1.2]
[Count]  MK:5   C :0      M :0      Y :0      LLk:0     Lm:0      LC:0      Lk:0
[Position]  MK  : ( 0,  0), ( 0,  0), ( 0,  0), ( 0,  0), ( 0,  0), ( 0,  0),
                  ( 0,  0), ( 0,  0), ( 0,  0), ( 0,  0), ( 0,  0), ( 0,  0)
[Position]  C   : ( 0,  0), ( 0,  0), ( 0,  0), ( 0,  0), ( 0,  0), ( 0,  0),
                  ( 0,  0), ( 0,  0), ( 0,  0), ( 0,  0), ( 0,  0), ( 0,  0)
[Position]  M   : ( 0,  0), ( 0,  0), ( 0,  0), ( 0,  0), ( 0,  0), ( 0,  0),
                  ( 0,  0), ( 0,  0), ( 0,  0), ( 0,  0), ( 0,  0), ( 0,  0)
[Position]  Y   : ( 0,  0), ( 0,  0), ( 0,  0), ( 0,  0), ( 0,  0), ( 0,  0),
                  ( 0,  0), ( 0,  0), ( 0,  0), ( 0,  0), ( 0,  0), ( 0,  0)
[Position]  LLk : ( 0,  0), ( 0,  0), ( 0,  0), ( 0,  0), ( 0,  0), ( 0,  0),
                  ( 0,  0), ( 0,  0), ( 0,  0), ( 0,  0), ( 0,  0), ( 0,  0)
[Position]  Lm  : ( 0,  0), ( 0,  0), ( 0,  0), ( 0,  0), ( 0,  0), ( 0,  0),
                  ( 0,  0), ( 0,  0), ( 0,  0), ( 0,  0), ( 0,  0), ( 0,  0)
[Position]  Lc  : ( 0,  0), ( 0,  0), ( 0,  0), ( 0,  0), ( 0,  0), ( 0,  0),
                  ( 0,  0), ( 0,  0), ( 0,  0), ( 0,  0), ( 0,  0), ( 0,  0)
[Position]  Lk  : ( 0,  0), ( 0,  0), ( 0,  0), ( 0,  0), ( 0,  0), ( 0,  0),
                  ( 0,  0), ( 0,  0), ( 0,  0), ( 0,  0), ( 0,  0), ( 0,  0)
```

Print mode: 360dpi, Bi-D, 320cps, VSD1, Large

Figure 1-40. Ink-mark Sensor Operation Check Pattern

Adjustment Parameters Printing

Adjustment parameters can be printed out.

Pump Counter Check

Diagnoses if the Pump Counter value is within the allowable range.

- Below the specification value: OK
- Above the specification value: NG

1.4.6.2 Counter Display Menu (VIEW COUNTERS)

This menu displays the counter value of each unit/part.

Table 1-63. Counter Display Menu

Top menu		1st hierarchy	
Panel Display	Item	Panel Display	Item
VIEW COUNTERS	Counter display menu	CUTTER	Cutter life counter value
		CUTTER TOTAL	Cutter life cumulative counter value
		TOTAL PAGES	Total printouts counter value
		CR MOTOR	CR motor life counter value
		CR TOTAL	CR motor cumulative counter value
		PF MOTOR	PF motor life counter value
		TBD	Pressure Pump motor life counter
		NOZZLE A	Head unit life counter value (A row - H row)
		⋮	
		NOZZLE H	
		FL BOX	Flashing box counter value
		CLEANER	Cleaning unit life counter value
		SPONGE	Sponge counter value display for left and right borderless
		PG	PG switching counter value

Cutter Life Counter

Displays cutter life counter value. Cutter life counter is counted every cut operation. Cutter life counter value is initialized (initial value 0) when replacing cutter.

Cutter Life Cumulative Counter

Displays cutter life cumulative counter value. Cutter life cumulative counter value is counted every cut operation. Cutter life cumulative counter value is not initialized.

Total Printouts Counter

Displays total printouts counter value. Total printouts counter value is counted every paper eject operation.

CR Motor Life Counter

Displays CR motor life counter value. CR motor life counter value is counted every CR reciprocating.

CR Motor Cumulative Counter

Displays CR motor life cumulative counter value. CR motor life cumulative counter value is counted every CR reciprocating. It is not initialized by clearing carriage related information counter.

PF Motor Life Counter

Displays PF motor life counter value. PF motor counter life counter value counts PF feed amount.

Pressure Motor Life Counter

Displays life counter of the Pressure Pump motor.

Head Unit Life Counter Value Display (A Row - H Row)

Displays life counter of each nozzle from A row to H row. Head unit life counter is counted every ink discharging.

Flashing Box Counter Value Display

Displays flashing box counter value. The flushing box counter counts each time of flushing.

Cleaning Unit Life Counter Value Display

Displays cleaning unit life counter value. The cleaning unit life counter counts each time of cleaning.

Sponge Counter Value Display for Left and Right Borderless

Displays sponge count value for left and right borderless.

PAPER EJECTION SWITCHING COUNTER VALUE DISPLAY

Displays paper ejection switching counter value. The Paper Eject Switching Counter counts each time the paper eject switching movement occurs.

PG Switching Counter Value Display

Displays PG switching counter value. The PG switching counter counts each time the PG switching movement occurs.

1.4.6.3 Maintenance Information Menu (MAINT INFO)

All the life counters, and other various information on usage conditions stored on the NVRAM can be displayed on the LCD panel.

Table 1-64. MAIN INFO Menu Items

Top menu	1st hierarchy		2nd hierarchy		Settings	Unit
Item	Item	Description	Item	Description		
MAINT INFO	MENU E	Uptime and Environmental conditions	E1	Date and time maintained by the RTC	<YY><MM><DD><HH>	Date and time
			E2	Date and time of initializing the RTC	<YY><MM><DD><HH>	Date and time
			E3	Temperature of the printhead	<nn>	°C
			E4	Date when the power is ON for the first time	<YY><MM><DD>	Date
			E5	Cumulative total energized time period	<nnnnnnnnnn>	hour
			E6	Cumulative total time of Energy Star non-sleep mode	<nnnnnnnnnn>	sec
			E7	Cumulative total energized time of the Paper Suction fans	<nnnnnnnnnn>	sec
			E8	Cumulative total time of opening/closing the front cover	<nnnnnnnnnn>	Number of times
			E9	Reserved	---	---
			E10	Head temp. is lower than 15 degrees C when starting printing	<nnnnnnnnnn>	Number of times
			E11	Head temp. is within 15 to 20 degrees C when starting printing	<nnnnnnnnnn>	Number of times
			E12	Head temp. is within 20 to 25 degrees C when starting printing	<nnnnnnnnnn>	Number of times
			E13	Head temp. is within 25 to 30 degrees C when starting printing	<nnnnnnnnnn>	Number of times
			E14	Head temp. is within 30 to 35 degrees C when starting printing	<nnnnnnnnnn>	Number of times
			E15	Head temp. is higher than 35 degrees C when starting printing	nnnnnnnnnn	Number of times
			E16	The highest head temp. when starting printing	<nn>	°C
			E17	The lowest head temp. when starting printing	<nn>	°C
	MENU R	Carriage	R1	Reserved	---	---
			R2	Cumulative total cycles of the carriage movements (240 CPS)	<nnnnnnnnn>	Number of times
			R3	Cumulative total cycles of the carriage movements (350 CPS)	<nnnnnnnnn>	Number of times
			R4	Reserved	---	---
			R5	Date when carriage durable parts are replaced	<YY><MM><DD>	Date
			R6	Reserved	---	---
			R7	Cumulative total cycles of the carriage movements (240 CPS) after replacing the durable carriage parts.	<nnnnnnnnn>	Number of times
			R8	Cumulative total cycles of the carriage movements (350 CPS) after replacing the durable carriage parts	<nnnnnnnnn>	Number of times
			R9	Reserved	---	---

Continued to next page

Table 1-64. MAIN INFO Menu Items (continued)

Top menu	1st hierarchy		2nd hierarchy		Settings	Unit
Item	Item	Description	Item	Description		
MAINT INFO	MENU S	Ink System	S1	Cumulative waste ink counter L (Ink pad)*2	<nnnnnnn.n>	g
				Cumulative waste ink counter R (Ink pad)*2	<nnnnnnn.n>	g
			S2	Cumulative waste ink counter L (Flushing box)	<nnnnnnn.n>	g
				Cumulative waste ink counter R (Flushing box)	<nnnnnnn.n>	g
			S3	Number of executions of manual cleaning	<nnnnnnnnn>	Number of times
			S4	Number of executions of cleaning (CL1)	<nnnnnnnnn>	Number of times
			S5	Number of executions of cleaning (CL2)	<nnnnnnnnn>	Number of times
			S6	Number of executions of cleaning (CL3)	<nnnnnnnnn>	Number of times
			S7	Number of executions of cleaning (CL4)	<nnnnnnnnn>	Number of times
			S8	Number of executions of cleaning (CL5)	<nnnnnnnnn>	Number of times
			S9	Number of executions of cleaning (CL6)	<nnnnnnnnn>	---
			S10	Time and date of the last cleaning (CL5)	<YY><MM><DD><HH>	Date and time
			S11	Number of executions of cleaning (TCL1)	<nnnnnnnnn>	Number of times
			S12	Number of executions of cleaning (TCL2)	<nnnnnnnnn>	Number of times
			S13	Number of executions of cleaning other than home	<nnnnnnnnn>	Number of times
			S14	Number of executions of initial ink charge*1	<nnnnnnnnn>	Number of times
			S15	Number of replacements of the black ink 1 (from PK to MK)	<nnnnnnnnn>	Number of times
			S16	Time and date of the last ink replacement 1	<YY><MM><DD><HH>	Date and time
			S17	Time and date of the last but one ink replacement 1	<YY><MM><DD><HH>	Date and time
			S18	Number of replacements of the black ink 2 (from MK to PK)	<nnnnnnnnn>	Number of times
			S19	Time and date of the last ink replacement 2	<YY><MM><DD><HH>	Date and time
			S20	Time and date of the last but one ink replacement 2	<YY><MM><DD><HH>	Date and time
			S21	Number of replacements of the Maintenance Tank (L)*2	<nnnnnnnnn>	Number of times
				Number of replacements of the Maintenance Tank (R)*2	<nnnnnnnnn>	Number of times
			S22	Time and date of the replacement of the Maintenance Tank (L)*2	<YY><MM><DD><HH>	Date and time
				Time and date of the replacement of the Maintenance Tank (R)*2	<YY><MM><DD><HH>	Date and time
			S23	Time and date of the last replacement of the Maintenance Tank (L)*2	<YY><MM><DD><HH>	Date and time
				Time and date of the last replacement of the Maintenance Tank (R)*2	<YY><MM><DD><HH>	Date and time
			S24	Time and date of the last but one replacement of the Maintenance Tank (L)*2	<YY><MM><DD><HH>	Date and time
				Time and date of the last but one replacement of the Maintenance Tank (R)*2	<YY><MM><DD><HH>	Date and time
			S25	Number of executions of borderless ink pad cleaning sequence	<nnnnnnnnn>	Number of times
			S26	Time and date of the last borderless ink pad cleaning	<nnnnnnnnn>	Date and time

Continued to next page

Note
- The number of executions of the initial ink charge is counted when CL1 is performed at the beginning of the charging sequence.
- The “L” (anti-home side) and “R” (home side) are displayed on the Stylus Pro 9400/9800 only. They are not displayed on the Stylus Pro 7400/7800.

Table 1-64. MAIN INFO Menu Items (continued)

Top menu	1st hierarchy		2nd hierarchy				Settings	Unit
Item	Item	Description	Item	Description				
MAINT INFO	MENU A	Ink 1	A1	Cumulative amount of ink consumed	Slot 1	EPSON ink	<nnnnnnnnnn>	ml
			A2	Cumulative amount of ink consumed	Slot 1	Non-EPSON ink	<nnnnnnnnnn>	ml
			A3	Cumulative amount of ink consumed	Slot 2	EPSON ink	<nnnnnnnnnn>	ml
			A4	Cumulative amount of ink consumed	Slot 2	Non-EPSON ink	<nnnnnnnnnn>	ml
			A5	Cumulative amount of ink consumed	Slot 2	EPSON ink	<nnnnnnnnnn>	ml
			A6	Cumulative amount of ink consumed	Slot 3	Non-EPSON ink	<nnnnnnnnnn>	ml
			A7	Cumulative amount of ink consumed	Slot 4	EPSON ink	<nnnnnnnnnn>	ml
			A8	Cumulative amount of ink consumed	Slot 4	Non-EPSON ink	<nnnnnnnnnn>	ml
			A9	Cumulative amount of ink consumed	Slot 5	EPSON ink	<nnnnnnnnnn>	ml
			A10	Cumulative amount of ink consumed	Slot 5	Non-EPSON ink	<nnnnnnnnnn>	ml
			A11	Cumulative amount of ink consumed	Slot 6	EPSON ink	<nnnnnnnnnn>	ml
			A12	Cumulative amount of ink consumed	Slot 6	Non-EPSON ink	<nnnnnnnnnn>	ml
			A13	Cumulative amount of ink consumed	Slot 7	EPSON ink	<nnnnnnnnnn>	ml
			A14	Cumulative amount of ink consumed	Slot 7	Non-EPSON ink	<nnnnnnnnnn>	ml
			A15	Cumulative amount of ink consumed	Slot 8	EPSON ink	<nnnnnnnnnn>	ml
			A16	Cumulative amount of ink consumed	Slot 8	Non-EPSON ink	<nnnnnnnnnn>	ml
			A17	Number of replacements of the ink cartridge	Slot 1	110 ml	<nnnnnnnnnn>	Number of times
			A18	Number of replacements of the ink cartridge	Slot 1	220 ml	<nnnnnnnnnn>	Number of times
			A19	Number of replacements of the ink cartridge	Slot 2	110 ml	<nnnnnnnnnn>	Number of times
			A20	Number of replacements of the ink cartridge	Slot 2	220 ml	<nnnnnnnnnn>	Number of times
			A21	Number of replacements of the ink cartridge	Slot 3	110 ml	<nnnnnnnnnn>	Number of times
			A22	Number of replacements of the ink cartridge	Slot 3	220 ml	<nnnnnnnnnn>	Number of times
			A23	Number of replacements of the ink cartridge	Slot 4	110 ml	<nnnnnnnnnn>	Number of times
			A24	Number of replacements of the ink cartridge	Slot 4	220 ml	<nnnnnnnnnn>	Number of times
			A25	Number of replacements of the ink cartridge	Slot 5	110 ml	<nnnnnnnnnn>	Number of times
			A26	Number of replacements of the ink cartridge	Slot 5	220 ml	<nnnnnnnnnn>	Number of times
			A27	Number of replacements of the ink cartridge	Slot 6	110 ml	<nnnnnnnnnn>	Number of times
			A28	Number of replacements of the ink cartridge	Slot 6	220 ml	<nnnnnnnnnn>	Number of times
			A29	Number of replacements of the ink cartridge	Slot 7	110 ml	<nnnnnnnnnn>	Number of times
			A30	Number of replacements of the ink cartridge	Slot 7	220 ml	<nnnnnnnnnn>	Number of times
			A31	Number of replacements of the ink cartridge	Slot 8	110 ml	<nnnnnnnnnn>	Number of times
			A32	Number of replacements of the ink cartridge	Slot 8	220 ml	<nnnnnnnnnn>	Number of times

Continued to next page

Note : The slot number is assigned in ascending order from the left of the printer.

Table 1-64. MAIN INFO Menu Items (continued)

Top menu	1st hierarchy		2nd hierarchy		Settings	Unit
Item	Item	Description	Item	Description		
MAINT INFO	MENU B	Ink 2	B1	Date and time of ink replacement (Slot 1)	<YY><MM><DD>	Date and time
			B2	Ink vendor name (Slot 1)	<xxxxxxxxxxxxxxxxx>	Character string
			B3	Date and time of the last ink replacement (Slot 1)	<YY><MM><DD>	Date and time
			B4	The previous ink vendor name (Slot 1)	<xxxxxxxxxxxxxxxxx>	Character string
			B5	Date and time of the last but one ink replacement (Slot 1)	<YY><MM><DD>	Date and time
			B6	The second previous ink vendor name (Slot 1)	<xxxxxxxxxxxxxxxxx>	Character string
			B7	Date and time of ink replacement (Slot 1)	<YY><MM><DD>	Date and time
			B8	Ink vendor name (Slot 2)	<xxxxxxxxxxxxxxxxx>	Character string
			B9	Date and time of the last ink replacement (Slot 2)	<YY><MM><DD>	Date and time
			B10	The previous ink vendor name (Slot 2)	<xxxxxxxxxxxxxxxxx>	Character string
			B11	Date and time of the last but one ink replacement (Slot 2)	<YY><MM><DD>	Date and time
			B12	The second previous ink vendor name (Slot 2)	<xxxxxxxxxxxxxxxxx>	Character string
			B13	Date and time of ink replacement (Slot 3)	<YY><MM><DD>	Date and time
			B14	Ink vendor name (Slot 3)	<xxxxxxxxxxxxxxxxx>	Character string
			B15	Date and time of the last ink replacement (Slot 3)	<YY><MM><DD>	Date and time
			B16	The previous ink vendor name (Slot 3)	<xxxxxxxxxxxxxxxxx>	Character string
			B17	Date and time of the last but one ink replacement (Slot 3)	<YY><MM><DD>	Date and time
			B18	The second previous ink vendor name (Slot 3)	<xxxxxxxxxxxxxxxxx>	Character string
			B19	Date and time of ink replacement (Slot 4)	<YY><MM><DD>	Date and time
			B20	Ink vendor name (Slot 4)	<xxxxxxxxxxxxxxxxx>	Character string
			B21	Date and time of the last ink replacement (Slot 4)	<YY><MM><DD>	Date and time
			B22	The previous ink vendor name (Slot 4)	<xxxxxxxxxxxxxxxxx>	Character string
			B23	Date and time of the last but one ink replacement (Slot 4)	<YY><MM><DD>	Date and time
			B24	The second previous ink vendor name (Slot 4)	<xxxxxxxxxxxxxxxxx>	Character string
			B25	Date and time of ink replacement (Slot 5)	<YY><MM><DD>	Date and time
			B26	Ink vendor name (Slot 5)	<xxxxxxxxxxxxxxxxx>	Character string
			B27	Date and time of the last ink replacement (Slot 5)	<YY><MM><DD>	Date and time
			B28	The previous ink vendor name (Slot 5)	<xxxxxxxxxxxxxxxxx>	Character string
			B29	Date and time of the last but one ink replacement (Slot 5)	<YY><MM><DD>	Date and time
			B30	The second previous ink vendor name (Slot 5)	<xxxxxxxxxxxxxxxxx>	Character string

Continued to next page

Note : The slot number is assigned in ascending order from the left of the printer.

Table 1-64. MAIN INFO Menu Items (continued)

Top menu	1st hierarchy		2nd hierarchy		Settings	Unit
Item	Item	Description	Item	Description		
MAINT INFO	MENU B	Ink 2	B31	Date and time of ink replacement (Slot 6)	<YY><MM><DD>	Date and time
			B32	Ink vendor name (Slot 6)	<xxxxxxxxxxxxxxxxx>	Character string
			B33	Date and time of the last ink replacement (Slot 6)	<YY><MM><DD>	Date and time
			B34	The previous ink vendor name (Slot 6)	<xxxxxxxxxxxxxxxxx>	Character string
			B35	Date and time of the last but one ink replacement (Slot 6)	<YY><MM><DD>	Date and time
			B36	The second previous ink vendor name (Slot 6)	<xxxxxxxxxxxxxxxxx>	Character string
			B37	Date and time of ink replacement (Slot 7)	<YY><MM><DD>	Date and time
			B38	Ink vendor name (Slot 7)	<xxxxxxxxxxxxxxxxx>	Character string
			B39	Date and time of the last ink replacement (Slot 7)	<YY><MM><DD>	Date and time
			B40	The previous ink vendor name (Slot 7)	<xxxxxxxxxxxxxxxxx>	Character string
			B41	Date and time of the last but one ink replacement (Slot 7)	<YY><MM><DD>	Date and time
			B42	The second previous ink vendor name (Slot 7)	<xxxxxxxxxxxxxxxxx>	Character string
			B43	Date and time of ink replacement (Slot 8)	<YY><MM><DD>	Date and time
			B44	Ink vendor name (Slot 8)	<xxxxxxxxxxxxxxxxx>	Character string
			B45	Date and time of the last ink replacement (Slot 8)	<YY><MM><DD>	Date and time
			B46	The previous ink vendor name (Slot 8)	<xxxxxxxxxxxxxxxxx>	Character string
			B47	Date and time of the last but one ink replacement (Slot 8)	<YY><MM><DD>	Date and time
			B48	The second previous ink vendor name (Slot 8)	<xxxxxxxxxxxxxxxxx>	Character string

Continued to next page

Note : The slot number is assigned in ascending order from the left of the printer.

Table 1-64. MAIN INFO Menu Items (continued)

Top menu	1st hierarchy		2nd hierarchy			Settings	Unit
Item	Item	Description	Item	Description			
MAINT INFO	MENU P	Paper info	P1	Number of settings of roll paper	---	<nnnnnnnnn>	Number of times
			P2	Number of settings of cut sheet (manual feed)	---	<nnnnnnnnn>	Number of times
			P3	Printable length	Paper width 1	<nnnnnnnnn>	mm
			P4	Number of ejections of paper	Paper width 1	<nnnnnnnnn>	Number of times
			P5	Printable length	Paper width 2	<nnnnnnnnn>	mm
			P6	Number of ejections of paper	Paper width 2	<nnnnnnnnn>	Number of times
			P7	Printable length	Paper width 3	<nnnnnnnnn>	mm
			P8	Number of ejections of paper	Paper width 3	<nnnnnnnnn>	Number of times
			P9	Printable length	Paper width 4	<nnnnnnnnn>	mm
			P10	Number of ejections of paper	Paper width 4	<nnnnnnnnn>	Number of times
			P11	Printable length	Paper width 5	<nnnnnnnnn>	mm
			P12	Number of ejections of paper	Paper width 5	<nnnnnnnnn>	Number of times
			P13	Printable length	Paper width 6	<nnnnnnnnn>	mm
			P14	Number of ejections of paper	Paper width 6	<nnnnnnnnn>	Number of times
			P15	Printable length	Paper width 7	<nnnnnnnnn>	mm
			P16	Number of ejections of paper	Paper width 7	<nnnnnnnnn>	Number of times
			P17	Printable length	Paper width 8	<nnnnnnnnn>	mm
			P18	Number of ejections of paper	Paper width 8	<nnnnnnnnn>	Number of times
			P19	Printable length	Paper width 9	<nnnnnnnnn>	mm
			P20	Number of ejections of paper	Paper width 9	<nnnnnnnnn>	Number of times
			P21	Printable length	Paper width 10	<nnnnnnnnn>	mm
			P22	Number of ejections of paper	Paper width 10	<nnnnnnnnn>	Number of times
			P23	Printable length	Other width	<nnnnnnnnn>	mm
			P24	Number of ejections of paper	Other width	<nnnnnnnnn>	Number of times

Continued to next page

Note
- The “Paper width” is the width specified by “ESC(S)” command. However, if paper width detected by sensors is narrower than the specified width, the detected width is adopted.
- When a print job does not include the ESC(S) command, it is counted in the “Other width.

Table 1-64. MAIN INFO Menu Items (continued)

Top menu	1st hierarchy		2nd hierarchy			Settings	Unit
Item	Item	Description	Item	Description			
MAINT INFO	MENU P	Paper info	P25	Printable length	Paper width 1	<nnnnnnnnn>	mm
			P26	Number of ejections of paper	Paper width 1	<nnnnnnnnn>	Number of times
			P27	Printable length	Paper width 2	<nnnnnnnnn>	mm
			P28	Number of ejections of paper	Paper width 2	<nnnnnnnnn>	Number of times
			P29	Printable length	Paper width 3	<nnnnnnnnn>	mm
			P30	Number of ejections of paper	Paper width 3	<nnnnnnnnn>	Number of times
			P31	Printable length	Paper width 4	<nnnnnnnnn>	mm
			P32	Number of ejections of paper	Paper width 4	<nnnnnnnnn>	Number of times
			P33	Printable length	Paper width 5	<nnnnnnnnn>	mm
			P34	Number of ejections of paper	Paper width 5	<nnnnnnnnn>	Number of times
			P35	Printable length	Paper width 6	<nnnnnnnnn>	mm
			P36	Number of ejections of paper	Paper width 6	<nnnnnnnnn>	Number of times
			P37	Printable length	Paper width 7	<nnnnnnnnn>	mm
			P38	Number of ejections of paper	Paper width 7	<nnnnnnnnn>	Number of times
			P39	Printable length	Paper width 8	<nnnnnnnnn>	mm
			P40	Number of ejections of paper	Paper width 8	<nnnnnnnnn>	Number of times
			P41	Printable length	Paper width 9	<nnnnnnnnn>	mm
			P42	Number of ejections of paper	Paper width 9	<nnnnnnnnn>	Number of times
			P43	Printable length	Paper width 10	<nnnnnnnnn>	mm
			P44	Number of ejections of paper	Paper width 10	<nnnnnnnnn>	Number of times
			P45	Printable length	Other width	<nnnnnnnnn>	mm
			P46	Number of ejections of paper	Other width	<nnnnnnnnn>	Number of times

Continued to next page

Note
- The “Paper width” is the width specified by “ESC(S)” command. However, if paper width detected by sensors is narrower than the specified width, the detected width is adopted.
- When a print job does not include the ESC(S) command, it is counted in the “Other width.

Table 1-64. MAIN INFO Menu Items (continued)

Top menu	1st hierarchy		2nd hierarchy				Settings	Unit
Item	Item	Description	Item	Description				
MAINT INFO	MENU M	Print mode	M1	Number of times the print mode is specified 1	2880-1440 4PASS	Uni-D	<nnnnnnnnn>	Number of times
			M2	Number of times the print mode is specified 2	1440-720 4PASS	Uni-D	<nnnnnnnnn>	Number of times
			M3	Number of times the print mode is specified 3	720-720 FOL	Uni-D	<nnnnnnnnn>	Number of times
			M4	Number of times the print mode is specified 4	720-360 FOL	Uni-D	<nnnnnnnnn>	Number of times
			M5	Number of times the print mode is specified 5	360-720 MW	Uni-D	<nnnnnnnnn>	Number of times
			M6	Number of times the print mode is specified 6	Other mode	Uni-D	<nnnnnnnnn>	Number of times
			M7	Number of times the print mode is specified 7	2880-1440 4PASS	Bi-D	<nnnnnnnnn>	Number of times
			M8	Number of times the print mode is specified 8	1440-720 4PASS	Bi-D	<nnnnnnnnn>	Number of times
			M9	Number of times the print mode is specified 9	720-720 FOL	Bi-D	<nnnnnnnnn>	Number of times
			M10	Number of times the print mode is specified 10	720-360 FOL	Bi-D	<nnnnnnnnn>	Number of times
			M11	Number of times the print mode is specified 11	360-720 MW	Bi-D	<nnnnnnnnn>	Number of times
			M12	Number of times the print mode is specified 12	Other mode	Bi-D	<nnnnnnnnn>	Number of times
			M13	Number of times the borderless print is specified 1	2880-1440 4PASS	Uni-D	<nnnnnnnnn>	Number of times
			M14	Number of times the borderless print is specified 2	1440-720 4PASS	Uni-D	<nnnnnnnnn>	Number of times
			M15	Number of times the borderless print is specified 3	720-720 FOL	Uni-D	<nnnnnnnnn>	Number of times
			M16	Number of times the borderless print is specified 4	720-360 FOL	Uni-D	<nnnnnnnnn>	Number of times
			M17	Number of times the borderless print is specified 5	360-720 MW	Uni-D	<nnnnnnnnn>	Number of times
			M18	Number of times the borderless print is specified 6	Other mode	Uni-D	<nnnnnnnnn>	Number of times
			M19	Number of times the borderless print is specified 7	2880-1440 4PASS	Bi-D	<nnnnnnnnn>	Number of times
			M20	Number of times the borderless print is specified 8	1440-720 4PASS	Bi-D	<nnnnnnnnn>	Number of times
			M21	Number of times the borderless print is specified 9	720-720 FOL	Bi-D	<nnnnnnnnn>	Number of times
			M22	Number of times the borderless print is specified 10	720-360 FOL	Bi-D	<nnnnnnnnn>	Number of times
			M23	Number of times the borderless print is specified 11	360-720 MW	Bi-D	<nnnnnnnnn>	Number of times
			M24	Number of times the borderless print is specified 12	Other mode	Bi-D	<nnnnnnnnn>	Number of times
			M25	Number of executions of full-bleed print on all four sides with one cut.	---	---	<nnnnnnnnn>	Number of times
			M26	Number of executions of full-bleed print on all four sides with double cut.	---	---	<nnnnnnnnn>	Number of times

Continued to next page

Note : The print modes are detected and counted at the time of starting a print job. They are counted even if the job is cancelled in the middle of the printing.

Table 1-64. MAIN INFO Menu Items (continued)

Top menu	1st hierarchy		2nd hierarchy		Settings	Unit
Item	Item	Description	Item	Description		
MAINT INFO	MENU 0	Panel Setting Info	01	Number of changes of the platen gap setting	<nnnnnnnnn>	Number of times
			02	Number of changes of roll paper margin setting	<nnnnnnnnn>	Number of times
			03	Number of executions of cutter position adjustment	<nnnnnnnnn>	Number of times
			04	Date and time of the last cutter position adjustment	<YY><MM><DD>	Date and time
			05	Number of times that the nozzle check pattern is printed	<nnnnnnnnn>	Number of times
			06	Date and time of the last nozzle check pattern printing	<YY><MM><DD>	Date and time
			07	Number of executions of Bi-D adjustment (BK)	<nnnnnnnnn>	Number of times
			08	Date and time of the last Bi-D adjustment (BK)	<YY><MM><DD>	Date and time
			09	Number of executions of Bi-D adjustment (All Colors)	<nnnnnnnnn>	Number of times
			010	Date and time of the last Bi-D adjustment (All Colors)	<YY><MM><DD>	Date and time
			011	Number of executions of Uni-D adjustment	<nnnnnnnnn>	Number of times
			210	Date and time of the last Uni-D adjustment	<YY><MM><DD>	Date and time
			013	Number of executions of Auto Bi-D adjustment (BK)	<nnnnnnnnn>	Number of times
			014	Date and time of the last Auto Bi-D adjustment (BK)	<YY><MM><DD>	Date and time
			015	Number of executions of Auto Bi-D adjustment (All Colors)	<nnnnnnnnn>	Number of times
			016	Date and time of the last Auto Bi-D adjustment (All Colors)	<YY><MM><DD>	Date and time
			017	Number of executions of Auto Uni-D adjustment	<nnnnnnnnn>	Number of times
			018	Date and time of the last Auto Uni-D adjustment	<YY><MM><DD>	Date and time
			019	Number of changes of the cut pressure	<nnnnnnnnn>	Number of times
			020	Number of changes of the cut method	<nnnnnnnnn>	Number of times
			021	Number of corrections of paper feed amount	<nnnnnnnnn>	Number of times
			022	Number of changes of paper suction level	<nnnnnnnnn>	Number of times
			023	Number of changes of print adjustment	<nnnnnnnnn>	Number of times
			024	Number of executions of auto nozzle check	<nnnnnnnnn>	Number of times
			025	Number of executions of cleaning after auto nozzle check	<nnnnnnnnn>	Number of times
			026	Date and time of the last auto nozzle check	<YY><MM><DD>	Date and time
			027	Number of corrections made by auto feed amount adjustment	<nnnnnnnnn>	Number of times
			028	Date and time of the last auto feed amount adjustment	<YY><MM><DD>	Date and time

Continued to next page

Note : The number of executions of auto nozzle check is counted at the beginning of the sequence. Retries when dot missing is detected are not counted.

Table 1-64. MAIN INFO Menu Items (continued)

Top menu	1st hierarchy		2nd hierarchy		Settings	Unit
Item	Item	Description	Item	Description		
MAINT INFO	MENU F	Fatal error	F1	Service call error type ever occurred 1	<xxxxxxxx>	Error code
			F2	Date and time of occurrence of the error 1	<YY><MM><DD>	Date and time
			F3	Service call error type ever occurred 2	<xxxxxxxx>	Error code
			F4	Date and time of occurrence of the error 2	<YY><MM><DD>	Date and time
			F5	Service call error type ever occurred 3	<xxxxxxxx>	Error code
			F6	Date and time of occurrence of the error 3	<YY><MM><DD>	Date and time
			F7	Service call error type ever occurred 4	<xxxxxxxx>	Error code
			F8	Date and time of occurrence of the error 4	<YY><MM><DD>	Date and time
			F9	Service call error type ever occurred 5	<xxxxxxxx>	Error code
			F10	Date and time of occurrence of the error 5	<YY><MM><DD>	Date and time
			F11	Service call error type ever occurred 6	<xxxxxxxx>	Error code
			F12	Date and time of occurrence of the error 6	<YY><MM><DD>	Date and time
			F13	Service call error type ever occurred 7	<xxxxxxxx>	Error code
			F14	Date and time of occurrence of the error 7	<YY><MM><DD>	Date and time
			F15	Service call error type ever occurred 8	<xxxxxxxx>	Error code
			F16	Date and time of occurrence of the error 8	<YY><MM><DD>	Date and time
			F17	Service call error type ever occurred 9	<xxxxxxxx>	Error code
			F18	Date and time of occurrence of the error 9	<YY><MM><DD>	Date and time
			F19	Service call error type ever occurred 10	<xxxxxxxx>	Error code
			F20	Date and time of occurrence of the error 10	<YY><MM><DD>	Date and time

Continued to next page

Table 1-64. MAIN INFO Menu Items (continued)

Top menu	1st hierarchy		2nd hierarchy		Settings	Unit
Item	Item	Description	Item	Description		
MAINT INFO	MENU N	Normal error	N1	Normal error type ever occurred 1	<xxxxxxxx>	Error code
			N2	Date and time of occurrence of the error 1	<YY><MM><DD>	Date and time
			N3	Normal error type ever occurred 2	<xxxxxxxx>	Error code
			N4	Date and time of occurrence of the error 2	<YY><MM><DD>	Date and time
			N5	Normal error type ever occurred 3	<xx>	Error code
			N6	Date and time of occurrence of the error 3	<YY><MM><DD>	Date and time
			N7	Normal error type ever occurred 4	<xx>	Error code
			N8	Date and time of occurrence of the error 4	<YY><MM><DD>	Date and time
			N9	Normal error type ever occurred 5	<xx>	Error code
			N10	Date and time of occurrence of the error 5	<YY><MM><DD>	Date and time
			N11	Normal error type ever occurred 6	<xx>	Error code
			N12	Date and time of occurrence of the error 6	<YY><MM><DD>	Date and time
			N13	Normal error type ever occurred 7	<xx>	Error code
			N14	Date and time of occurrence of the error 7	<YY><MM><DD>	Date and time
			N15	Normal error type ever occurred 8	<xx>	Error code
			N16	Date and time of occurrence of the error 8	<YY><MM><DD>	Date and time
			N17	Normal error type ever occurred 9	<xx>	Error code
			N18	Date and time of occurrence of the error 9	<YY><MM><DD>	Date and time
			N19	Normal error type ever occurred 10	<xx>	Error code
			N20	Date and time of occurrence of the error 10	<YY><MM><DD>	Date and time
			N21	Number of occurrences of roll paper set error	<nnnnnnnnn>	Number of times
			N22	Number of occurrences of cut sheet set error	<nnnnnnnnn>	Number of times

1.4.7 MIB Function

The Stylus Pro 7400/7800 and the Stylus Pro 9400/9800 are compatible with the two types of MIB described in the tables below. This allows you to see the printer information (spec, status, consumables) obtained from the MIB on a computer via a network. The Local MIB is used when the printer is in Type-B Level 3 Packet Mode.

- Compatible MIB
  - Global MIB

Name	Contents
Host Resource MIB	Device information etc.
Printer MIB	Printer information (function/commodity/status)
EPSON Printer Private MIB	Printer information (DeviceID/StatusReply letter strings etc.)

  - Local MIB

Name	Contents
Type-B Local MIB	Type-B I/F setting /information
EMAP Local MIB	Corresponding MIB information

1.4.8 Function to Prevent Irregular Printing

- Forced cancel of print job

  When the printer receives 16KB DC1 at the beginning of each job, it performs a special initialization operation.
  Refer to "1.4.9 Initialization" *(p.137)* for more details.

- Skip reading of irregular data
  - Unprintable characters
    Characters including ASCII code in text print mode.

Table 1-65. Unprintable Hexadecimal Code (Control Character Code)

Code	Character	Code	Character	Code	Character	Code	Character
00h	NULL	08h	BS	10h	DLE	1Ah	SUB
01h	SOH	09h	HT	11h	DC1	1Bh	ESC
02h	STX	0Ah	NL (LF)	12h	DC2	1Ch	FS
03h	ETX	0Bh	VT	13h	DC3	1Dh	GS
04h	EOT	0Ch	NP (FF)	16h	SYN	1Eh	RS
05h	ENQ	0Dh	CR	17h	ETB	1Fh	US
06h	ACK	0Eh	SO	18h	CAN	7Fh	DEL
07h	BEL	0Fh	SI	19h	EM	---	---

Note : 0Ah, 0Ch, 0Dh, 11h, and 1Bh are ESCP command supported by the printer. The printer judges the command at the same time and decides whether to print it.

  - Job time out
    Refer to "1.4.4.11 Time Out" *(p.68)*.
  - Preventing the remaining data from being printed on the second cut sheet
    If the print data size is larger than the maximum data size that can be printed on a single sheet (manual feed), the remaining data that cannot be printed on the first sheet is not printed on the second sheet.
    The remaining print data (graphic data) is ignored, and the next new print data is printed from the top of the second paper.

1.4.9 Initialization

The printer performs initialization operation by the following method.

1.4.9.1 Hardware Initialization

- The following are the initialization operation performed when turning the power on.
  - Initialization operation
    - Initializes printer mechanism.
    - Clears input data buffer.
    - Clears print buffer.
    - Sets default values.

1.4.9.2 Software Initialization

- The default command (ESC @) also initializes the printer.
  - Initialization operation
    - Clears print buffer.
    - Sets default values.
- Cancel enhancement data (DC1x16kbyte) initializes the printer.
  - Initialization operation
    - Clears print buffer.
    - Sets default values.
    - Immediate cut only when some printing remains on the paper.

1.4.9.3 Panel Initialization

This printer is initialized when pushing the [Pause] switch for more than 3 seconds, or printer recognized the *INIT signal.

- Initialization operation
  - Ejects a paper. (For roll paper, paper is cut by skipping print part when Paper Source = Auto Cut in panel setting, paper is not cut when Paper Source = Cutter Off)
  - Caps the print head.
  - Clears input data buffer.
  - Clears print buffer.
  - Sets default values.

1.4.10 Default Setup Values

1.4.10.1 Operation Default Setting

- Default Status
  Default setup values in initialization operation are as follows. The parameters for items that may be saved for panel setup, default setup, and remote commands are used as default values.
  - Page position: Sets current paper position as page start position
  - Line feed: 1/6”
  - Right margin: 1st character
  - Left margin: 3mm
  - Character pitch: 10CPI
  - Print mode: Text mode (non-raster graphics mode)
- Cut Sheet Eject
  When at power introduction it is judged by the printer that there is both cut sheet setting and also there is paper remaining in the paper path, the paper is fed and ejected. The printer is at standby “READY”.

NOTE: *For details, refer to “Mechanical Design Specifications”.*

1.5 Controller

- CPU: SH7709S 144 MHz
- Code ROM: 2 MB
- Font ROM: None
- RAM:
  - Stylus Pro 7400/7800: 64 MB
  - Stylus Pro 9400/9800: 128 MB
- Interface
  - IEEE1394
  - USB (HS, FS)
  - Type-B Interface
- OS: Hitachi HI7700 (µITRON 3.0 compatible)

1.6 Interface

1.6.1 USB interface

SPECIFICATION

- Standard
  - Universal Serial Bus Specifications Revision 2.0
  - Universal Serial Bus Specifications Revision 1.1
  - Universal Serial Bus Device Class Definition for Printing Devices Version 1.1
- Bit rate
  - 480 Mbp (High Speed Mode)
  - 12 Mbp (Full Speed Device)
- Data format: NRZI
- Adaptable connector: USB Series B
- Acceptable cable length: 5m
- Device ID
  <xx><xx> (Character strings may vary by Model Name.)
  MFG:EPSON;
  CMD:ESCPL2,BDC;
  MDL:<Model Name>;
  CLS:PRINTER;
  DES:EPSON<SP><Model Name>; (<SP>: space code)

SIGNAL ASSIGNMENT AND SIGNAL DEFINITION OF INPUT CONNECTOR PIN

Table 1-66. Signal Assignment and Signal Definition of Input Connector Pin (USB (FS))

Pin No.	Signal name	In/Out	Function description
1	VCC	---	Cable power. Maximum power consumption is 100mA
2	–Data	Bi-directional	Data
3	+Data	Bi-directional	Data, pull up to +3.3V via 1.5K ohm resistor
4	Ground	---	Cable ground

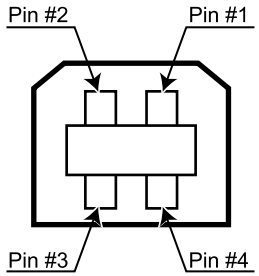

USB_IF.eps

Figure 1-41. Pin Assignment

1.6.2 IEEE1394 Interface

FEATURES

- IEEE Std.1394-1995,1394a-2000 compliant
- 400 Mbps
- 1 port (Standard 6-pin receptacle)
- Power Class: POWER_CLASS=000
  - Node does not need power and does not repeat power
  - Bi-directional data communication between the IEEE 1394 equipped host and the printer

SPECIFICATIONS

- Data transmission: Half-duplex, Data/Strobe differential
- Synchronization: DS-Link bit level encoding
- Encode/Decode: DS-Link bit level encoding
- Connector: IEEE 1394-1995 compliant plug (6 contacts)

SIGNAL ASSIGNMENT AND SIGNAL DEFINITION OF INPUT CONNECTOR PIN

Table 1-67. Signal Assignment and Signal Definition of Input Connector Pin

Pin No.	Signal name	Function description
1	VP	Cable power
2	VG	Cable ground
3	TPB*	Strobe on receive, data on transmit (differential pair)
4	TPB	
5	TPA*	Data on receive, strobe on transmit (differential pair)
6	TPA	

PROTOCOL

- SB-2 (ANSI NCITS 325-1998) compliant
- EP-PPDT (Based on IEEE 1394.3 specification)

1.6.3 Optional Interface

Type-B interface (level 3, MIB, 1200mA type) is supported.

REPLY MESSAGE

- Main-Type
  - Stylus Pro 7400/7800
    MT48p,PW240cl10cpi,PRG(SN0xxxx)rev,AP800ma,SPD0fast,D4,GDI
  - Stylus Pro 9400/9800
    MT48p,PW440cl10cpi,PRG(SW0xxxx)rev,AP800ma,SPD0fast,D4,GDI
    NOTE: *xxxx is F/W version.*
- Product-Name: <Model Name>
- Emulation-Type: ESCPL2-00
- Entity-Type: EPSONLQ2

REPLY FOR OPTION COMMAND

Table 1-68. Reply List

Option command number	Command name	Reply-A	Reply-B
00h	No-operation	Accept	None
01h	Start Hardware Reset	Accept	Execute OK
02h	Start Software Reset	Reject	
03h	Send Main System Type	Accept	
04h	Send Name Data	Reject	
05h	Inquire Name Data	Accept	
06h	Send Product Name	Accept	
07h	Send Software Emulation Type	Accept	
08h	Complete Buffered Data	Accept	Check Condition
09h	Stop Procedure	Reject	Execute OK
0Ah	Return Buffered Data	Reject	
0Bh	Send Entity Type	Accept	
0Ch	Send Status	Accept	
0Dh	Quit Procedure	Reject	
0Eh	Inquire ASCII Message	Reject	
0Fh	Send ASCII Message	Accept	None
10h-13h	---	Unknown	None
14h	Inquire Emergency Message	Accept	Execute OK
15h	Send Emergency Reply	Accept	
16h-1Fh	---	Unknown	None
20h-FFh	---	Reserved	None

SUPPORTED MAIN COMMAND AND SENDING TIMING

Table 1-69. Supported Main Command and Sending Timing

Main command number	Command name	Sending timing
01h	Start Software Reset	• Init signal on the std. parallel • Type B I/F Option command: 01h • Panel Reset • Cold start
04h	Send Name Data	Type B I/F Option command: 05h
07h	Inquire Software Emulation Type	Changing Software Emulation type
0Eh	Inquire ASCII Message	Writing to DBIN-register
14h	Inquire Emergency Reply	Reply for Emergency command
15h	Send Emergency Message	Receive Emergency command

SENDING BDC-ST CHARACTER STRINGS VIA DBIN-REGISTER

When ST of Type-B I/F sets “ON” State-Reply, BDC-ST is sent through DBINregister. When State Reply is started, “Start” and “End” of BDC-ST characters are announced by sending the Main command (0Eh).

NOTE: *The BDC-ST is only sent when Type-B Lv2 is used.*

TYPE-B LEVEL 3 PACKET MODE

Communication between Type-B I/F card and Printer corresponds to Type-B Level 3 (Packet Mode) Communication Specification. (IEEE P1284.4 (Draft 1.50) compliant)

- ☐ Packet Mode Shifting
  To shift to Type-B Level 3 Packet Mode, a Type-B Level 3-compliant card must have been installed (“D4” character must be added to Option Type character string). An error occurs if the card is not compatible with Type B Level 3.
- ☐ Supported Channel
  Assigning Service and Channel applies the chart below.

Table 1-70. Supported Channel

Service	Socket ID	Use	Initiator	Max Data Size	Credit
1284.4CTRL	00h	1284.4 control	---	64byte	1 (Limited Mode)
EPSON-MIB	04h	SNMP/MIB setting	I/F Card	556byte	1 (Limited Mode)
EPSON-TRAP	05h	SNMP/ Trap notification	Printer	556byte	1 (Limited Mode)
EPSON-DATA (Include Out of Band)	40h	Send print data	---	32kbyte (1Packet)	Depends on received buffer (Unlimited Mode)

- Supported Packet
  Apply the following communication packet.

Table 1-71. Supported Packet

Packet	description	Channel
EPSONPackingCommand/Reply	Packet Mode shifting	Ch00
Init/Reply	Initialization	Ch00
Exit/Reply	Exit from Packet Mode	Ch00
GetSocketID/Reply	Acquisition of Socket ID	Ch00
GetServiceName/Reply	Acquisition of Service Name	Ch00
OPENChannel/Reply	Open Channel	Ch00
CloseChannel/Reply	Close Channel	Ch00
Credit/Reply	Send Credit	Ch40
DataPacket	Printing data / reverse data	Ch40
MessagePacket	MIB PDU/Trap PDU etc.	Ch04/05
OutofBandPacket	Job control information etc.	Ch40

- Local MIB
  According to Type-B Level 3 Packet Mode correspondence, it corresponds to Local MIB (Type-B/EMAP).
  Refer to "1.4.7 MIB Function" *(p.136)*

1.6.4 Received Buffer Full Operation

If the receiving buffer free space becomes less than 32Kbytes when data is being received from the USB interface or IEEE1394 interface, and there are no errors occurring (including the pause status), the printer is limited to receiving data at 40byte/sec, which prevents a host data transmission timeout. When the receiving buffer returns to above 36Kbytes of free space, receiving returns to normal.

NOTE: *This status is not occurred in Type-B Level 3 Packet Mode for Credit administration.*

1.6.5 Interface Selection

The printer has IEEE1394 interface, USB 2.0 interface, and optional interface. These interfaces are selected manually by the default setting mode or selected automatically.

- Manual selection
  One of 3 interfaces can be selected; IEEE1394 interface, USB 2.0 interface, optional interface.
- Automatic detection
  An interface used for the first print job after power-On is automatically determined to be used from then. If the first job is interrupted in the middle of the data transmission, and not restarted within 10 seconds, the printer goes back to idle status and determines the interface which is used for the next job.

  NOTE: *This status is not implemented in Type-B Level 3 Packet Mode for Channel administration. To move to idle status, close the DataChannel.*

- Interface Selection and Interface State
  When the printer is initialized or returned to the idle status (any interface is not selected), the USB interface becomes non-NACK reply status, and the option interface resets OFF-LINE bit of Main Status Register (MNSTS).

1.7 Optional Units and Consumables

1.7.1 Ink Cartridge

Selection of ink types, detection of cartridges and the amount of remaining ink are controlled by CSIC.

CHECK POINT

When installing the pigment ink cartridges, shake them horizontally after unpacking them for about five seconds beforehand to ensure the designed print quality.

SPECIFICATION

- Type: Pigment
- Form: Special ink cartridge
- Ink capacity:
  - 110 ml
  - 220 ml
- Dimension:
  - 110 ml / 220 ml
    (W): 27.1 mm x (D): 185 mm x (H): 107 mm
- Total mass:
  - 110 ml: Approx. 250 g
  - 220 ml: Approx. 370 g
- Available ink quantity:
  - 110 ml: Over 103 ml
  - 220 ml: Over 210 ml
- Color:
  - Stylus Pro 7800, Stylus Pro 9800
    Photo black, magenta, light magenta, cyan, light cyan, yellow, light black, matte black, light light black
  - Stylus Pro 7400, Stylus Pro 9400
    Matte black, magenta, cyan, yellow
- Environmental requirements
  - Temperature: 10ºC ~ 40ºC
  - Relative temperature: 5% ~ 85% (without freezing)

CHECK POINT

Ink in the cartridge will freeze if it is left under minus 10 degrees C temperature. (Reference: Takes about three hours to thaw ink frozen in minus 20 degrees C completely under 25 degrees C.)

- Storage temperature

Condition	Temperature	Remarks
During packed storage	–30ºC to 40ºC	Within 1 month for 40ºC
Loading printer	–20ºC to 40ºC	Within 1 month for 40ºC
During transportation	–30ºC to 60ºC	• Within 1 month for 40ºC • Within 120 hours for 60ºC

CAUTION

If you remove an ink cartridge before it reaches the ink out state, you should store it under the same ambient conditions as for the printer body in such a way that the ink discharge opening is protected from dust intrusion. The ink cartridge stored as such and installed again can be used if it is within the term of availability.

- Life: 2 years (Total time of before and after of installing printer.)
- Insured date of printing quality:
  Pigment 6 month (After printer is installed.)
- Installation position:
  See "1.1.1 Features" *(p.11)* for the information on the installation position of each ink cartridge.

1.7.2 Cleaning Cartridge

- Type: Exclusive cleaning cartridge
- Dimension:
  - 110 ml / 220 ml
    (W): 27.1 mm x (D): 185 mm x (H): 107 mm
- Capacity: 220 ml
- Total mass: Approx. 370 g
- Effective cleaning solution: Over 208 ml
- Operation environment condition
  - Temperature: 10ºC ~ 40ºC
  - Relative temperature: 5% ~ 85% (without freezing)
- Storage temperature

Condition	Temperature	Remarks
During packed storage	–30ºC to 40ºC	Within 1 month for 40ºC
Loading printer	–20ºC to 40ºC	Within 1 month for 40ºC
During transportation	–30ºC to 60ºC	• Within 1 month for 40ºC • Within 120 hours for 60ºC

- Life: 2 years (includes time period before use)

1.7.3 Conversion Cartridge

- Type: Exclusive cartridge for ink change (not to be used as an ink cartridge)
- Dimension:
  - 110 ml / 220 ml
    (W): 27.1 mm x (D): 185 mm x (H): 107 mm
- Capacity: None
- Total mass: Approx. 100 g
- Effective cleaning solution: None
- Operation environment condition
  - Temperature: 10ºC ~ 40ºC
  - Relative temperature: 5% ~ 85% (without freezing)
- Storage temperature

Condition	Temperature	Remarks
During packed storage	–30ºC to 40ºC	Within 1 month for 40ºC
Loading printer	–20ºC to 40ºC	Within 1 month for 40ºC
During transportation	–30ºC to 60ºC	• Within 1 month for 40ºC • Within 120 hours for 60ºC

- Life: 2 years (includes time period before use)
- Guaranteed number of insertions and removals: Maximum 100 times

1.7.4 Maintenance Tank

The Stylus Pro 9400/9800 have two Maintenance Tanks on their lower left and right sides respectively. The Stylus Pro 7400/7800 have one Maintenance Tank on their lower right side. The tank can be replaced by the user when it becomes full.

- Type: Special maintenance tank for waste ink
- Number of pieces:
  - Stylus Pro 9400/9800: Two tanks
  - Stylus Pro 7400/7800: One tanks
- Dimension:
  (W): 102.5 mm x (D): 235 mm x (H): 79.5 mm
- Capacity: Approx. 1000 ml
- Allowable amount of waste ink:
  780 ml (excluding evaporated components)
- Environmental requirements:

Condition	Temperature	Humidity	Remarks
Operating	10ºC to 35ºC	20% to 80%	---
Storing	–20ºC to 40ºC	20% to 85%	---
Transporting	–20ºC to 60ºC	5% to 85%	• Within 1 month for 40ºC • Within 120 hours for 60ºC

CHAPTER

2

OPERATING PRINCIPLES

2.1 Overview

This chapter explains the print mechanism and operating principles for the EPSON Stylus Pro 7400/7800/9400/9800.

The explanation is composed as follows:

- *2.2 Print Mechanism Components (p.149)*
  - *2.2.1 Print Mechanism (Print Head) (p.150)*
  - *2.2.2 Carriage (CR) Mechanism (p.151)*
  - *2.2.3 Paper Feed Assembly (p.160)*
  - 2.2.4 Cleaning Mechanism (p.163)
  - 2.2.5 Ink Supply Mechanism (p.165)
  - 2.2.6 Others (p.166)
- *2.3 Outline of Power Supply Circuit Board (p.167)*
- *2.4 Outline of Power Supply Circuit Board (p.168)*

2.2 Print Mechanism Components

The major electrical parts used in the printer mechanism of this printer are as shown below. Hereafter, we will explain each printer mechanism focusing on these parts.

Table 2-1. Printer Mechanism Components

Part	Drive voltage	Explanation	Refer to
Print Mechanism (Print Head) *(p.150)*			
Print head	---	The number of nozzles: 180 Nozzle x 8 colors	*p.150*
Head thermistor	+3.3V	Incorporated in the print head	---
Carriage (CR) Mechanism *(p.151)*			
CR motor	+42V	DC motor	*p.152*
CR HP sensor	+3.3V	Transmission type photo-interrupter	*p.152*
CR encoder sensor	+5V	Linear encoder (180LPI)	*p.152*
Ink mark sensor (Detection in a direction parallel to the Carriage movement)	+3.3V/+5V	Reflection type photo-interrupter	*p.152*
PG HP sensor	+3.3V	Transmission type photo-interrupter	*p.154*
P EDGE sensor (Paper width detection)	+3.3V/+5V	Reflection type photo-interrupter	*p.155*
Cutter Solenoid	+24V	DC solenoid	*p.159*
Paper Feed Assembly *(p.160)*			
PF motor	+42V	DC motor	*p.160*
PF encoder sensor	+5V	Linear encoder (360LPI)	---
Paper suction fans	+24V	The number of DC blowers: 3	*p.161*
P Rear sensor (Paper presence detection)	+3.3V/+5V	Reflection type photo-interrupter	*p.162*
P THICK 1/2 sensor (Paper thickness)	+3.3V	Transmission type photo-interrupter	*p.162*
Release sensor (I/C lever detection)	+3.3V	Leaf switch	---
Cleaning Mechanism *(p.163)*			
Pump motor	+42V	DC motor	*p.163*
Ink pressure motor	+42V	Stepping motor	---
Regulator solenoid	+24V	DC solenoid	---

Table 2-1. Printer Mechanism Components

Part	Drive voltage	Explanation	Refer to
Ink Supply Mechanism *(p.165)*			
Ink cartridge	+5V, +3.3V	CSIC	---
Maintenance Tank	+5V, +3.3V	CSIC	*p.164*
Others *(p.166)*			
Cover sensor (Front Cover open/close detection)	+3.3V	Leaf switch	*p.166*
MAIN board	---	Printer control/drive circuit board	*p.167*
Radiator cooling fan	+5V	DC brushless fan	---
Take-up motor	+24V	DC motor	---
Power Supply Circuit Board	---	---	*p.168*

2.2.1 Print Mechanism (Print Head)

Stylus Pro 7400/7800/9400/9800 employ a single print head which incorporates both functions for black and color as the previous model; Stylus Pro 7600/9600.
The print head incorporates a thermistor. According to the temperature around the head detected by the thermistor, the CPU on the Main Board controls the ink discharge speed and the amount of ink to be discharged.

- ☐ Printing method: On-demand ink-jet
- ☐ Nozzle configuration:
  180 nozzles x 8 rows = 1440 nozzles (See Figure 2-1)
  - ■ Black: Stylus Pro 7800/9800 (8-color model): 540 nozzles (180 nozzles for each of Black1, Black2, and Black3)
    Stylus Pro 7400/9400 (4-color model): 360 nozzles (180 nozzles for each of Black1 and Black2)
  - ■ Color: Stylus Pro 7800/9800 (8-color model): 900 nozzles (180 nozzles for each of cyan, magenta, light cyan, light magenta and yellow)
    Stylus Pro 7400/9400 (4-color model): 1080 nozzles (180 nozzles for each of cyan1, cyan2, magenta1, magenta2, yellow1, and yellow2)
- ☐ Nozzle pitch: 0.141mm (1/180 inch) for each color

Table 2-2. Relationship between Nozzle Rows and Colors

Nozzle Row	8-Color Mode	4-Color Mode
A	Light gray	Matte black
B	Light magenta	Matte black
C	Light cyan	Magenta
D	Gray	Magenta
E	Photo black/Matte black	Cyan
F	Cyan	Cyan
G	Magenta	Yellow
H	Yellow	Yellow

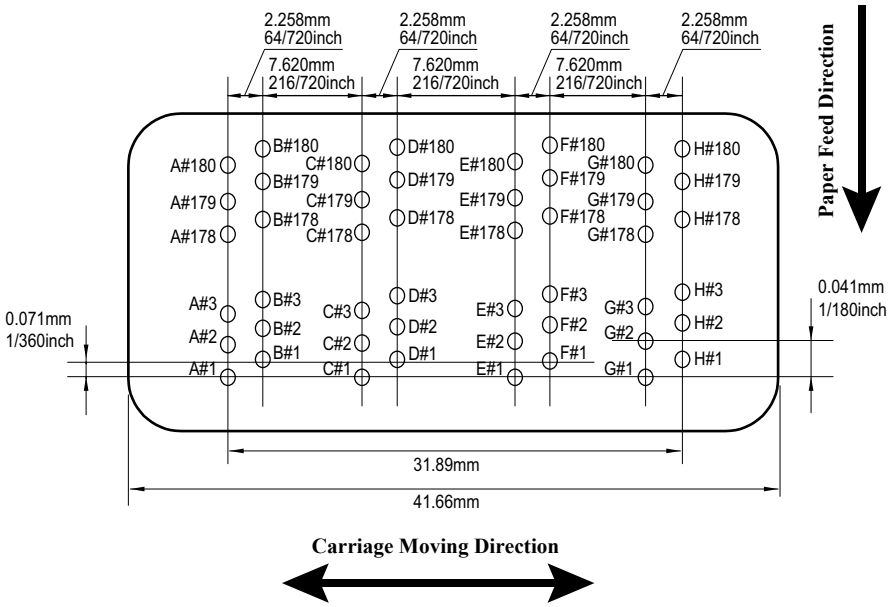

Figure 2-1. Nozzle Arrangement

- ☐ Drive waveform:
  The following table shows the outline of the waveforms of the six print modes.

Table 2-3. Printing Modes (Drive Waveforms)

Waveform Name	Drive Frequency	Print Resolution	CR Speed
VSD1	11.52 KHz ± 7%	H360 x V360 H360 x V720 H720 x V360	320 CPS
VSD1d	11.52 KHz ± 7%	H360 x V360 H360 x V720 H720 x V360	320 CPS
VSD2	8.64 KHz ± 7%	H720 x V360 H720 x V720	240 CPS
VSD2d	8.64 KHz ± 7%	H720 x V360 H720 x V720	240 CPS
VSD3	8.64 KHz ± 7%	H720 x V720 H1440 x V720	240 CPS
VSD3_HR	8.64 KHz ± 7%	H2880 x V1440	240 CPS

2.2.2 Carriage (CR) Mechanism

To ensure reliable and high-precision printing on wide-width paper (Stylus Pro 9400/9800 support B0 size, and Stylus Pro 7400/7800 support A1 size), the printer is equipped with a unique carriage mechanism which enables stable and high-precision movement of the on-carriage head.

The carriage mechanism consists of the following components.

- CR unit
- CR motor
- CR HP sensor
- CR encoder sensor
- PG HP sensor
- P EDGE sensor
- Ink mark sensor
- Cutter Solenoid

This section provides explanations on the following items.

- Carriage Moving Unit
- Platen Gap Adjustment Unit
- Cutter Solenoid/CR Lock Mechanism

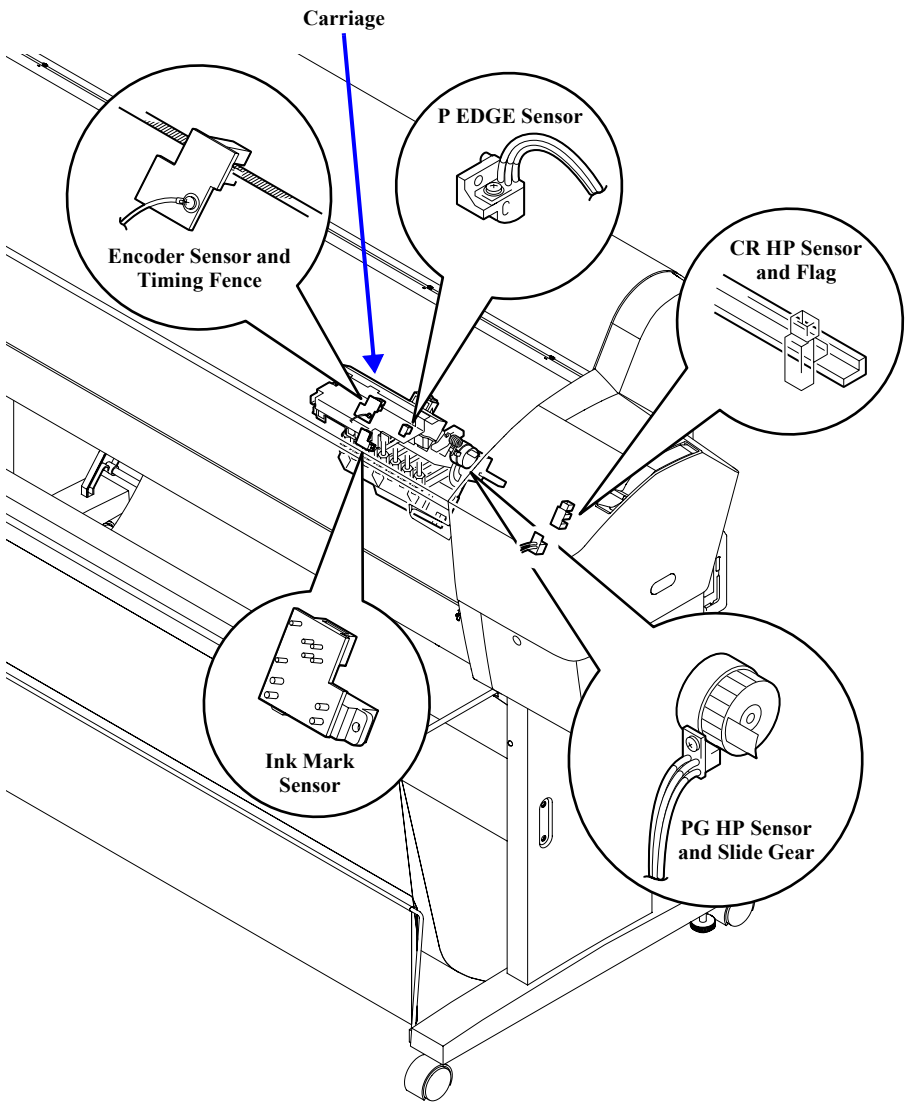

Figure 2-2. Carriage Mechanism

CARRIAGE MOVING UNIT

The carriage is installed on the square pipe - CR shaft (guide rail) made of extruded aluminum via roller type bearings as the previous model; Stylus Pro 7600/9600. The bearings contact/run on/across the CR shaft via steel rails incorporated on the CR shaft. This reduces the vibration and friction produced while moving the carriage and improves durability of the carriage mechanism.

CAUTION

Do not remove the carriage and the screws that secure the CR shaft (guide rails). These are adjusted and assembled to the nearest 1/100 mm at the factory.

- CR Motor
  A DC motor moves the carriage across the CR shaft. The movement speed is controlled by the control circuit on the main board. It receives carriage position signals detected by the encoder sensor on the carriage and compares them with the logical values to reflect the difference in the carriage control. The encoder sensor sends the carriage position signals each time it detect the slits on the CR scale (timing fence) which is attached parallel to the CR guide rail (Linear encoder system). This feedback control ensures high printing accuracy.
  To transmit the CR motor drive to the carriage, an easy-to-maintain, durable timing belt is used.
  The sensors used in the carriage moving unit are described below.
- CR HP Sensor (Carriage Home Position)
  This is a transmissive photosensor which is mounted on the right end of the printer mechanism and detects the entry position of the flag (projection) provided on the carriage as the carriage moving home position. Outputs from this sensor are “OFF” in the HP range and “ON” outside the HP range.
- CR Encoder Sensor (Linear Encoder)
  This encoder is mounted on the back of the carriage and outputs pulses (2 channels) corresponding to the position of the slit on the CR scale (timing fence) that is incorporated into the CR guide rail which are used for CR motor servo control and PTS (Print Timing Signal) generation. The resolution is 1/180 inch.
- Ink Mark Sensor
  This is a diffuse reflectance photosensor which functions in the same way as the multi sensor used on the previous models; Stylus Pro 4000/4400/4800. The sensor located on the rear of the carriage unit performs emitting light and responding to the reflected light one at a time. Its white LED emits light against the paper or dedicated print pattern printed on paper and the photoreceiver (PTR1) of the sensor reads the reflected light. According to the reflected light read by the sensor, the printer performs corrective actions as necessary.
  - Ink Mark Sensor Functions
    - Auto Bi-D Adjustment
    - Auto Uni-D Adjustment
    - Missing dots detection (Auto Nozzle Check)

PLATEN GAP ADJUSTMENT UNIT

In order to maintain the print precision, it is necessary to maintain the carriage (= head) mounting position so that it is always a constant distance from the surface of the paper. In this printer, the print head nozzle surfaces and platen surface are variable mechanisms so that the gap between the paper printing surface and the head nozzle surface can be kept constant.
The carriage has a 2-body construction with a sub-carriage on which the print heads are mounted attached to the carriage which forms the base. The sub-carriage moves in the vertical direction with respect to the paper surface. This movable system uses a cam (= PG). When the sub-carriage is in the HP position (= right end), the pump motor and the gear mounted on the cam shaft engage, the motor's rotation (reverse) drives the cam and the sub-carriage is positioned at the proper gap position.
In order to maintain the distance between the print head nozzle surface and the paper properly, the thicknesses of the paper used are classified into 5 levels for PG setting, namely, minimum PG (0.8 mm), small PG (1.2 mm), medium PG (1.6mm), large PG (2.1 mm), and maximum PG (2.6 mm).
The sensors used in the platen gap adjustment unit are explained below.

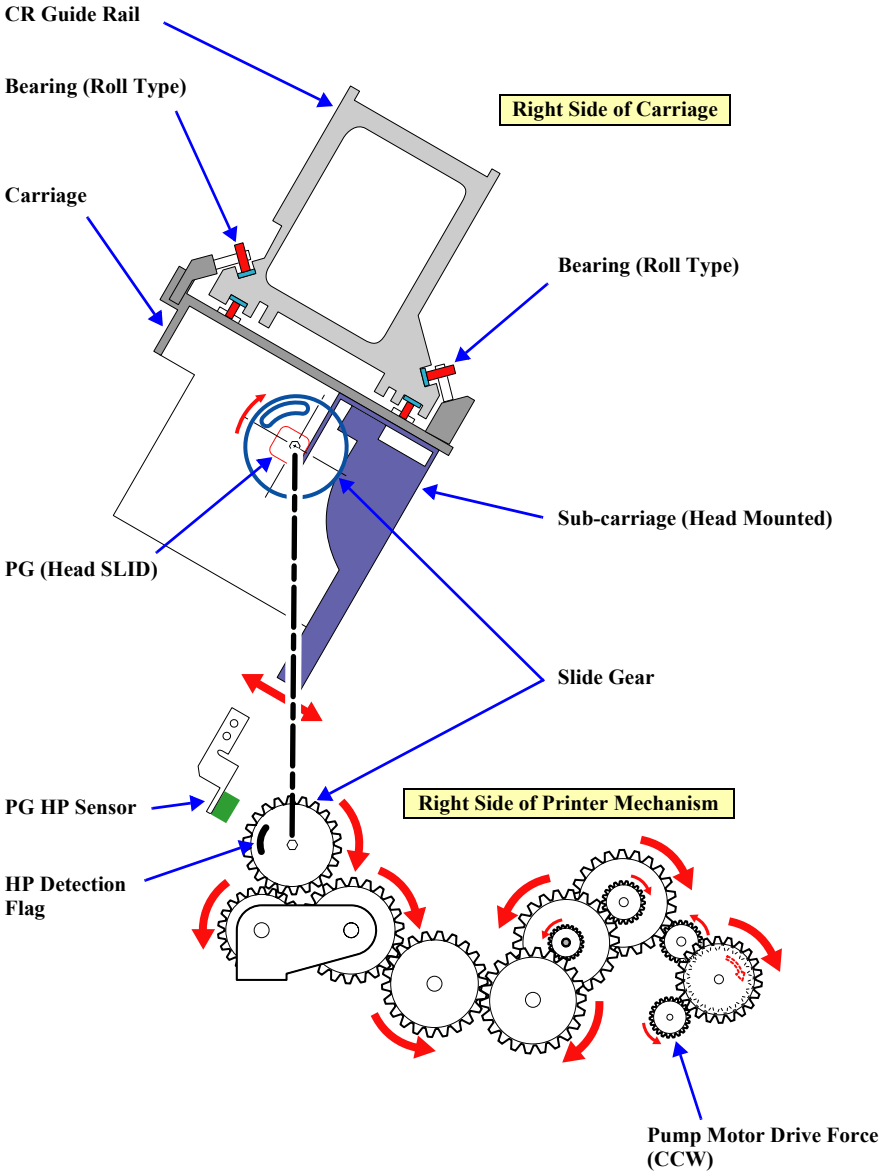

Figure 2-3. Carriage Mechanical Unit and PG Adjustment Unit

- PG HP Sensor (Platen Gap HP Detection)
  A shield is attached on the shaft of the PG slide gear (on the carriage) which works with the pump motor. The sensor detects the edge of the shield to adjust height of the print head.
  It is shaped like a cam to realize five head positions relative to the mechanical home position.

NOTE: *Error number displayed when the total pulse count has exceeded 1000: 0001000C PG origin detection error (Service Call Error)*

Table 2-4. Pulse Positions

Position	Gap Width	Application	Pulse Count from Origin (Converted to 2-2 Phase Excitation)
Maximum	2.6mm	For thick paper	193
Large	2.1mm	For paper which can be soiled if setting is for thin paper	409
Medium	1.6mm	For particular thin paper which can be easily scratched	625
Small	1.2mm	For thin paper	841
Minimum	0.8mm	For film type media	1057
One round	---	---	1080

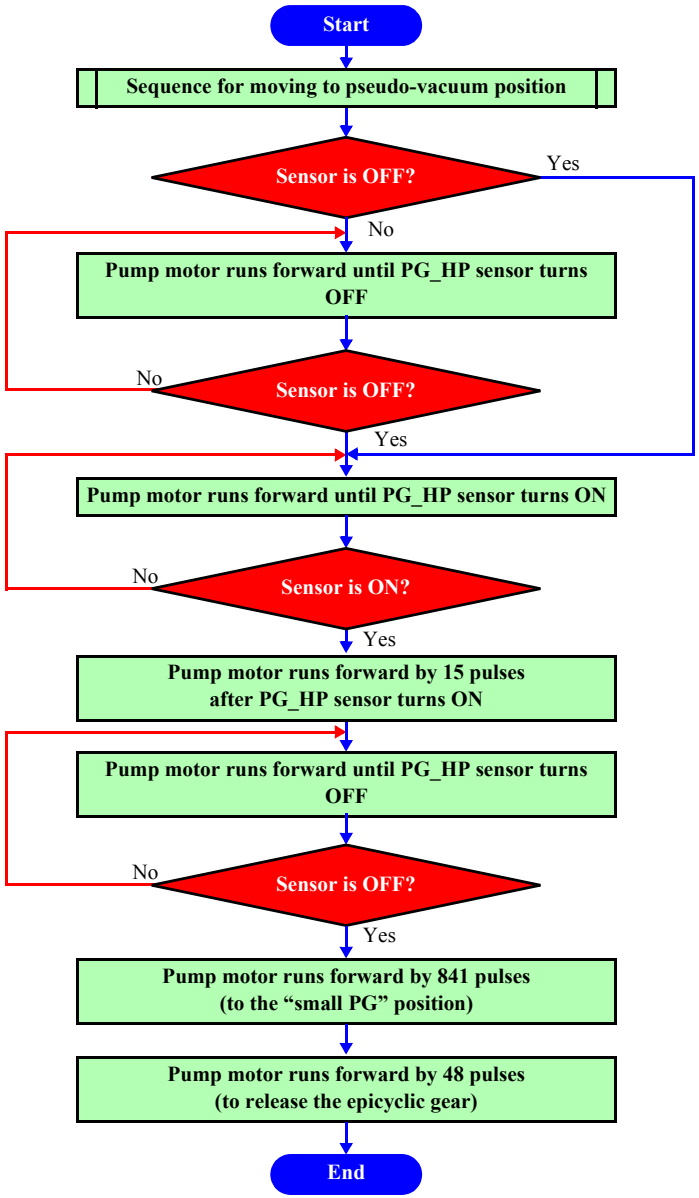

Figure 2-4. Head Slide (PG Change) Initialization Sequence

- P EDGE (Paper Width Detection) Sensor
  This sensor, mounted at the left-bottom side of the carriage unit, detects paper edges by moving the carriage.
  It detects four points of paper edges, namely, left and right points on the front edge and a front point on the left and right edges of the paper. Each position is calculated from the difference in reflection value between the platen and the paper.
  A reflective type photosensor is used. Each paper edge position (presence or absence of paper) is determined by an A/D converted value of the output from the photosensor.
  During printing, the sensor monitors the left and right edges of the paper to detect a skew.
  - Detecting distance up to the paper surface:
    =3mm to 10mm (Sensor Peak: 7 mm)

CHECK POINT

- **It must be ensured that the reflection value of the least reflective paper is greater than the reflection value of the platen.**
- **The paper must be free from floating at the detection point.**
- **If external light, such as sunlight, can enter the sensor due to the construction, mis-detection must be prevented by LED ON/OFF control. (Same as with Stylus Pro 7000)**
- **In this printer, the P EDGE Sensor works also to detect the paper front edge. (Same as the Stylus Pro 7600/9600)**

NOTE: *It is possible to turn this sensor OFF by* 1.4.2 Panel Display (p.39).

The following pages show paper size detection sequence (left and right edges and front edge).

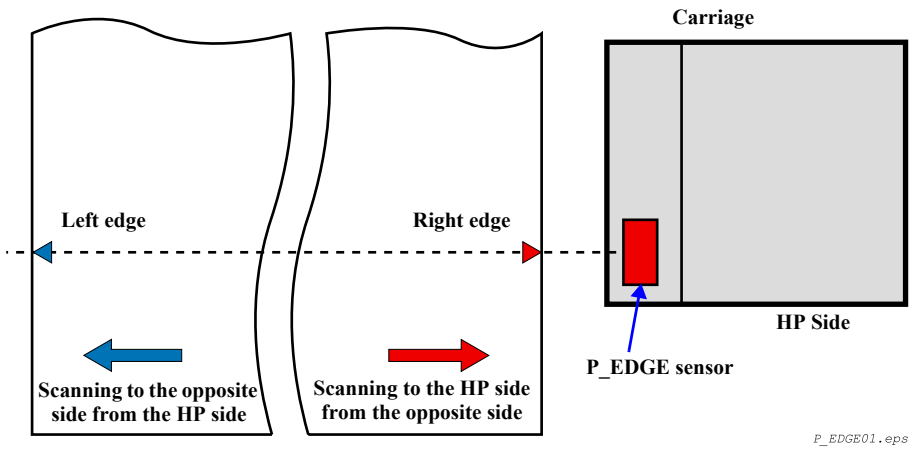

Figure 2-5. Carriage Unit Paper Width Detection Sensor

■ Paper size detection sequence (left and right edges)

Error display:
Set the paper correctly

Transition to this sequence is allowed only at paper initial.
At inter-page skew checking, transition to Simplified detection sequence for left and right edges (skew check) *(p.158)* takes place.

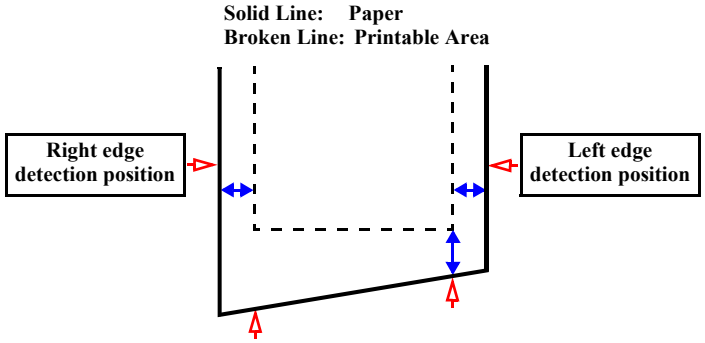

Note "*1": Printing area MAX position
· Stylus Pro 9400/9800
1,257.91mm + 7.0mm (Reserved width)
· Stylus Pro 7400/7800
759.91mm + 7.0mm (Reserved width)
"*2": Printing area MIN position
137.31mm - 7.0mm (Reserved width)
"*3": A countermeasure for mis-detection of the edge sensor. The sensor may detect a tab on the platen as paper in spite of paper absence. To ensure the paper detection, the printer judges that no paper is set if the paper width is narrower than 182 mm (B5 size) - 3 mm.

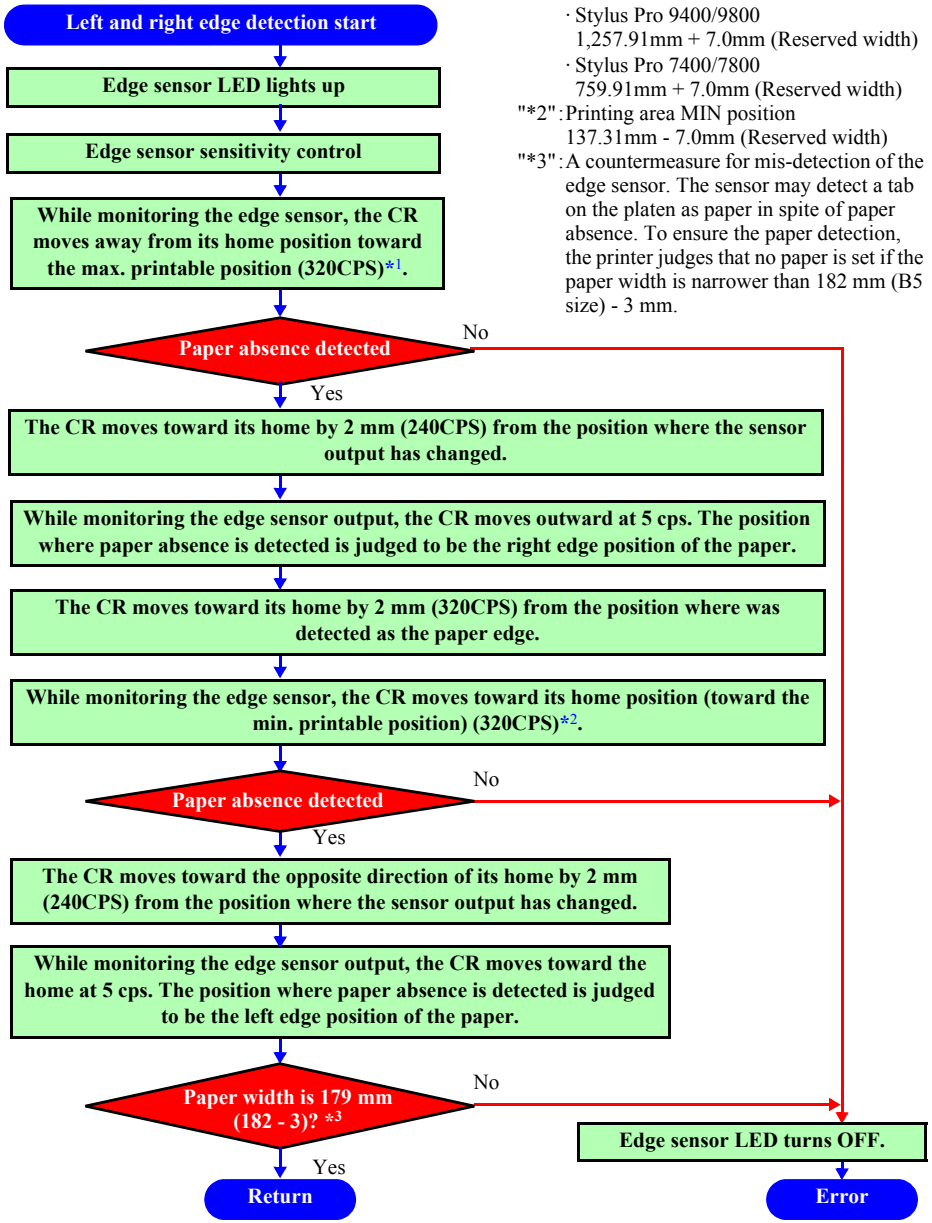

Figure 2-6. Paper Size Detection Sequence (left and right edges)

■ Paper size detection sequence (front edge)

Conditions:
For execution of this processing, the paper level threshold value must be known. (Execute this processing after detection of the right and left edges.)

Error display:
Set the paper correctly

When the paper width detection function is turned off, use the paper size front position as the user paper setting position. (On the assumption that detection is not made by the edge sensors)

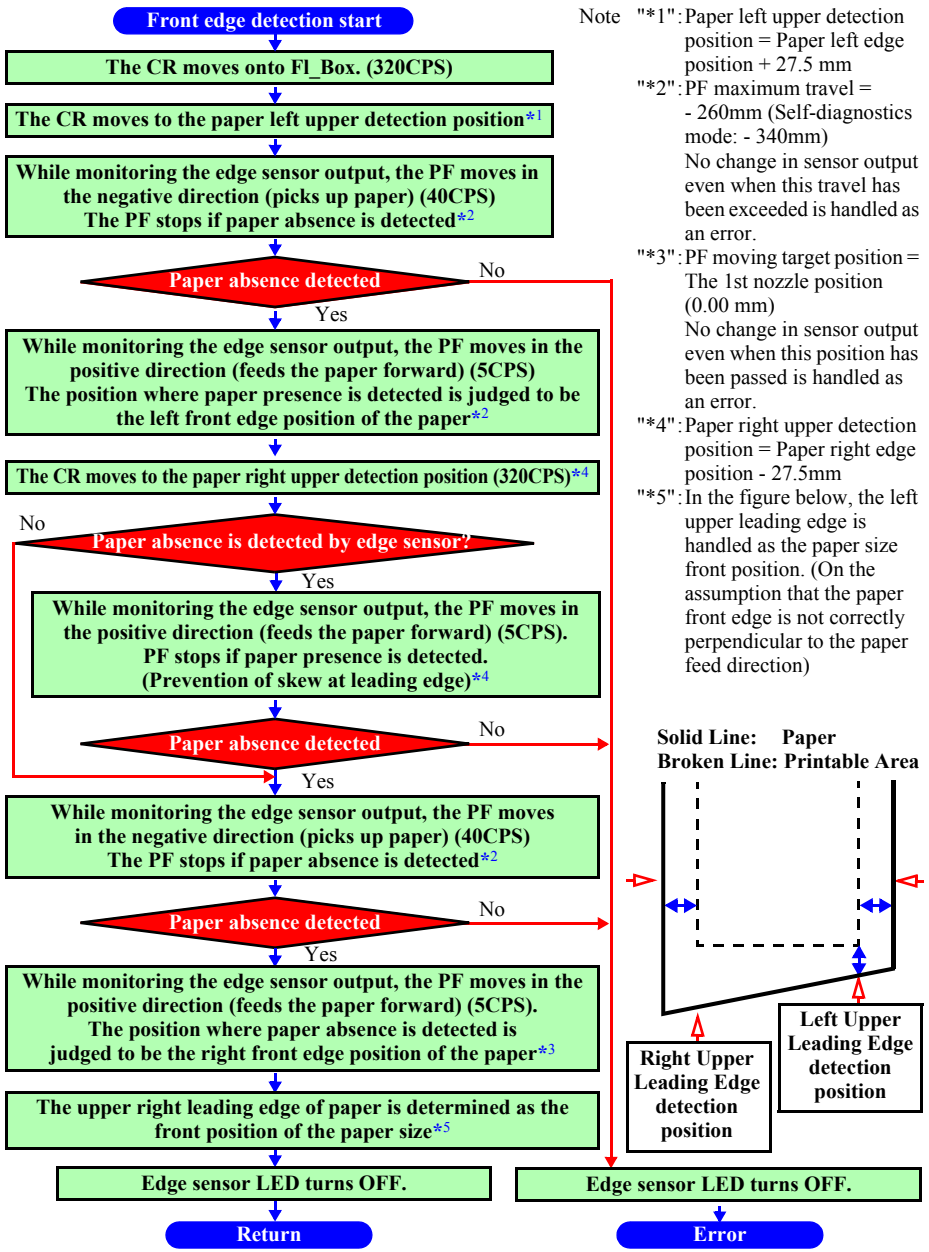

Figure 2-7. Paper Size Detection Sequence (Front Edge)

■ Simplified detection sequence for left and right edges (skew check)

When the paper width detection function is turned off, left and right edge detection (skew check) is not carried out.

Error display:
1: Set the paper correctly
2: PAPER NOT STRAIGHT

Transition to this sequence is allowed only at inter-page skew checking (at cut/eject, etc.) At paper initial, the printer moves to left and right edges detection sequence.

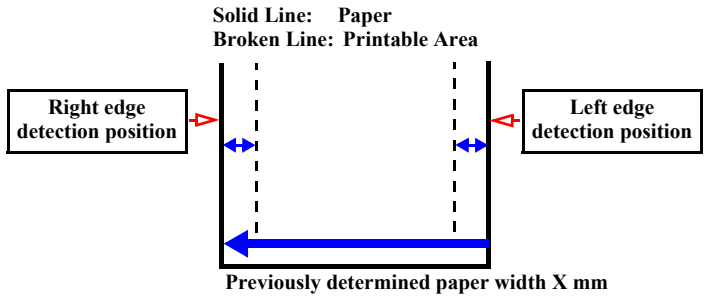

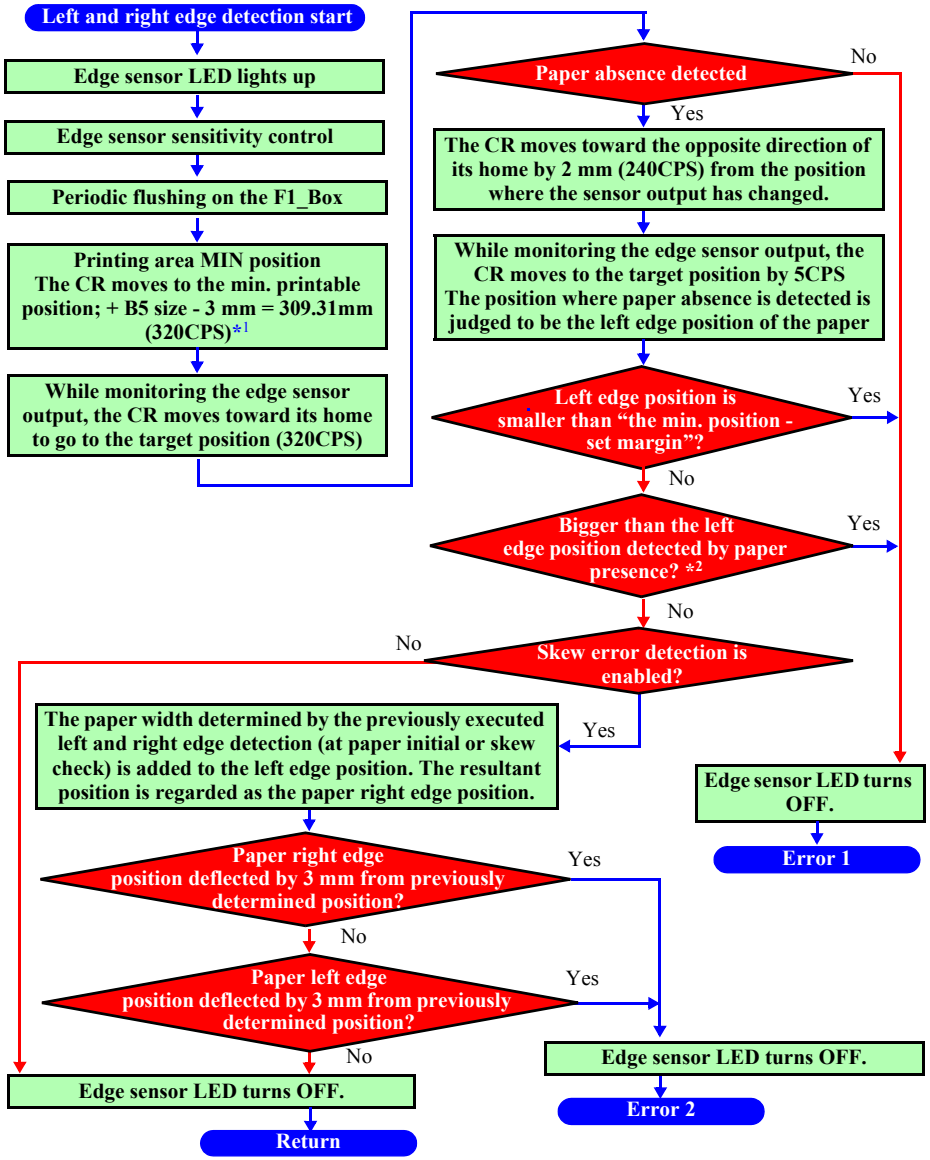

Note "*1": Min. printable position = 137.31mm - 7.0mm (Reserved width)
B5 size (182.0mm) - 3.0mm = 179.0mm
"*2": Paper presence position
Paper right edge position + 20 mm = 157.31 mm

Figure 2-8. Simplified Detection Sequence for Left and Right Edges (Skew Check)

- Cutter Solenoid
  This DC solenoid controls the cutting pressure of the roll paper cutter. It also unlocks the carriage.
  The function can be set to On or Off using the Panel buttons.

NOTE: *See 1.2.5.3 Cut Specifications (p.26).*

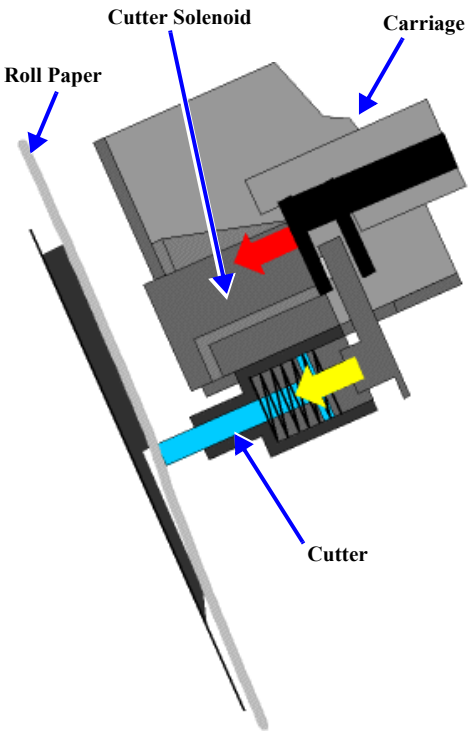

Figure 2-9. Carriage Unit Cutter Solenoid

2.2.3 Paper Feed Assembly

This printer uses friction feed to carry out highly precise feeding of roll paper and cut sheets, and comprises a unique paper feed mechanism.
The paper feed mechanism unit is configured from a grid roller (one piece construction), and pressurizing and follower roller assemblies mounted on the back of the CR guide rail opposite the front surface.

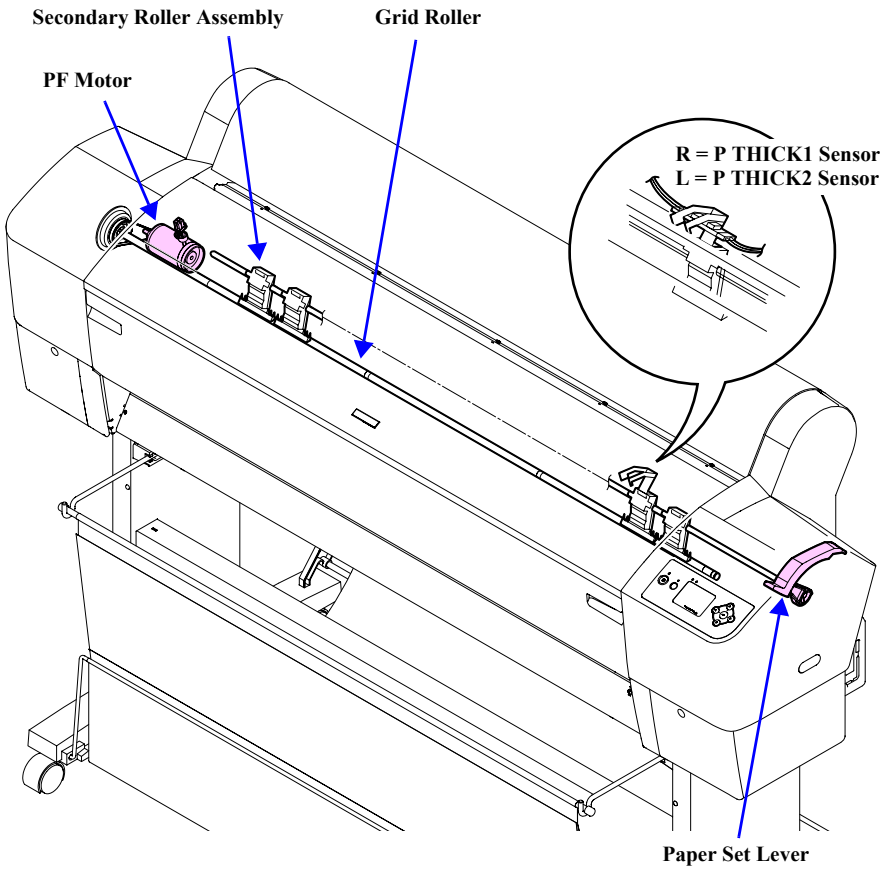

Figure 2-10. Paper Feed Assembly

- PF motor
  The PF motor is a DC motor. The slit of the loop scale mounted on the Grid Roller is read by the PF_ENC sensor and the output pulse is fed back to control the motor. This feedback control ensures high printing accuracy.
  The PF motor drive is transmitted to the grid roller via the PF timing belt and the reduction pulley.

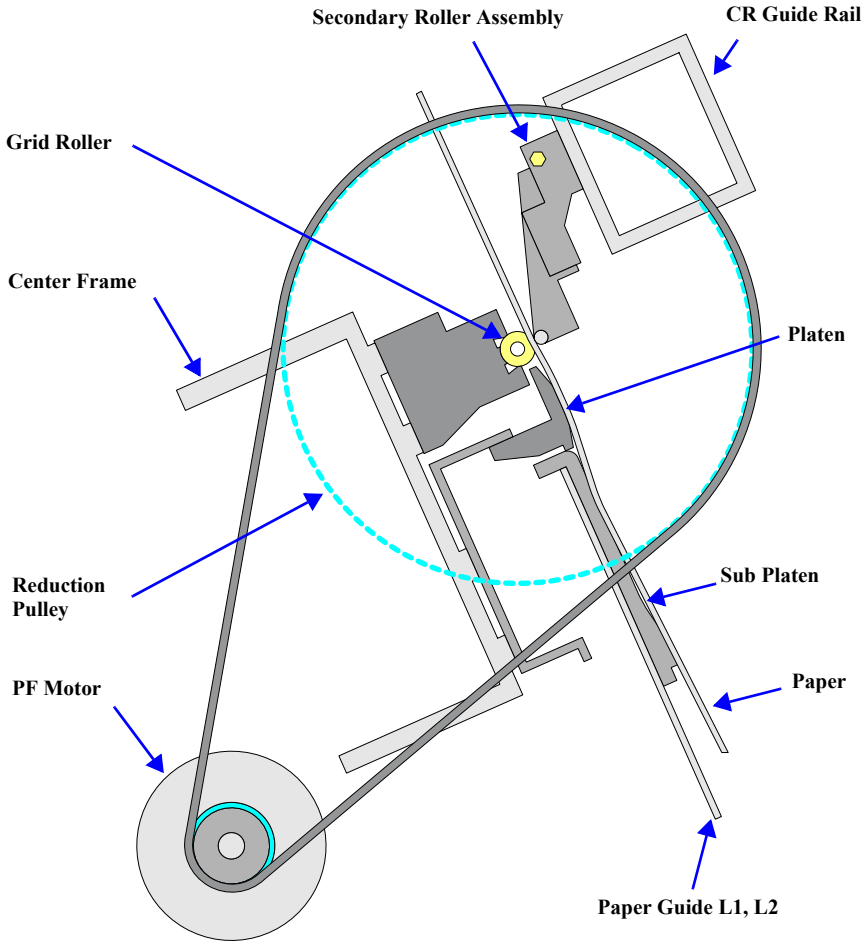

Figure 2-11. Paper Feed Mechanical Unit PF Rail Unit

- Paper Suction Fans
  The printer is equipped with suction fans in the front lower space. The space behind the Paper Guide L is divided into 3 compartments (Stylus Pro 7400/7800 are divided into 2), and one fan is mounted in each compartment. Paper on the Paper Guide L1 and L2 is firmly attracted to the guides by air flow created by the fans. They work to draw air through holes on the sub-platen in the backside of the paper path. This ensures stable paper feeding. The firmware controls the fan speed (fan rotation duty control) according to the paper type and printer's operating statuses such as setting the paper or during printing.

NOTE: *The number of the fans* *Stylus Pro 7400/7800: 2 fans*
Stylus Pro 9400/9800: 3 fans

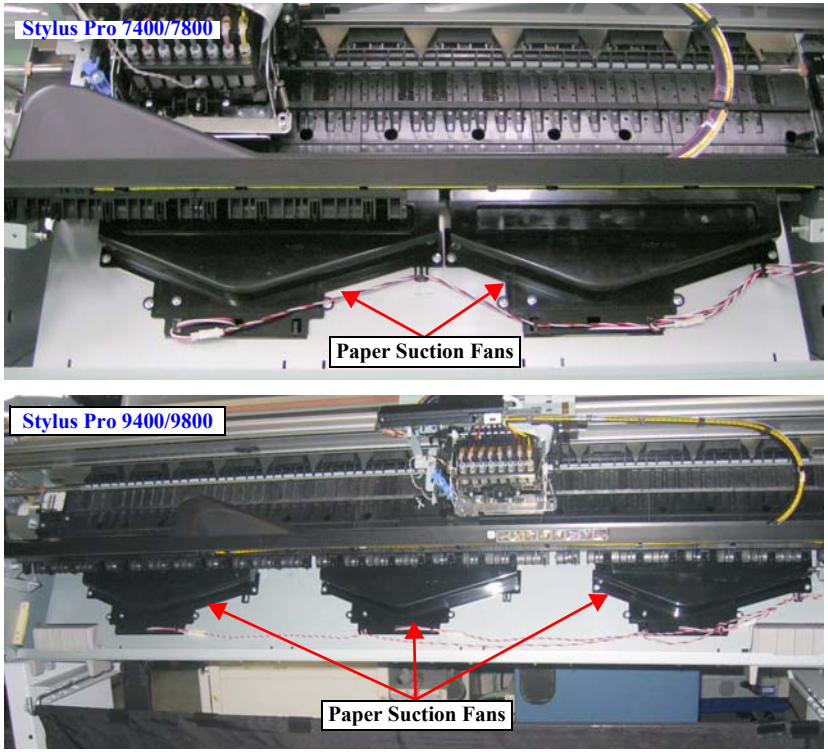

Figure 2-12. Paper Feed Assembly (Paper Suction Fans)

The sensors used in the paper feeding mechanism are explained below.

- P REAR sensor
  This is a photo-reflective sensor located on the backside of the H Top Cover. It detects paper absence by detecting the rear edge of the paper, and detects the leading edge of paper when the paper is loaded to let the printer start the paper setting operation such as attracting the paper to the paper guides.
- Paper set lever, paper thickness detection (P THICK1, P THICK2)
  - P THICK1 Sensor: A transmissive photosensor located on the right side.
  - P THICK2 Sensor: A transmissive photosensor located on the left side.

  In the paper feeding mechanism, there is a point where paper thickness threshold is set to 0.3 to 0.4 mm (P THICK2 sensor) and a point where that is set to 0.6 to 0.7 mm (P THICK1 sensor). When the Paper Set Lever is set on those points, the two sensors start to operate.
  The paper thickness detection range for moving the Paper Set Lever is 0.34 to 2.05 mm (design value). By a combination of the two sensors, the printer can determine to reduce the pressure of the Paper Set Lever according to the paper thickness.
  “Thick paper state” occurs when the connections are open.
  There is no error processing since this mechanism can not determine whether it has broke down or not.
  Since the mechanism is always in recognition of thick paper, printing on thin paper is carry out with the platen gap kept large.

Table 2-5. Modes

Paper Thickness	Shield Plate		Sensor Output	
	P THICK2	P THICK1	P THICK2	P THICK1
Below 0.3 mm	Absent (Open)	Absent (Open)	L	L
0.4mm to 0.6mm	Present (Closed)	Absent (Open)	H	L
0.7mm to 2.0mm	Present (Closed)	Present (Closed)	H	H
Pressure release (Hi-Up)	Absent (Open)	Present (Closed)	L	H
Connector not connected	---	---	H	H

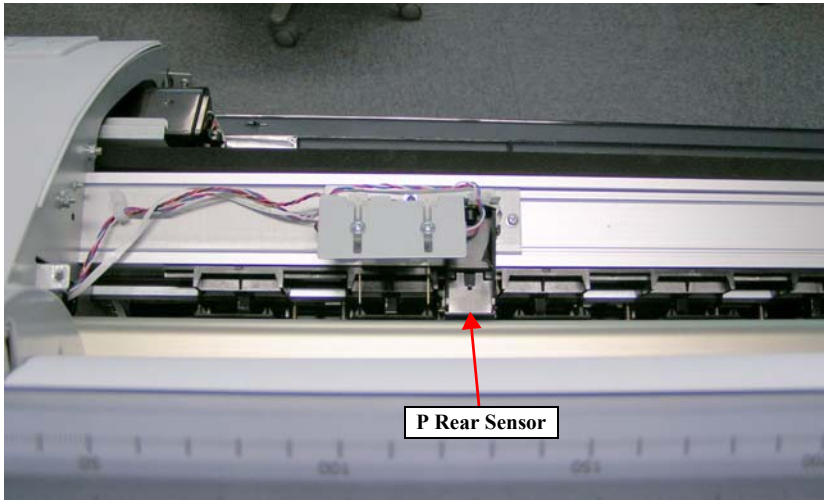

Figure 2-13. Paper Feed Assembly (P Rear Sensor)

2.2.4 Cleaning Mechanism

Major differences in the cleaning mechanism between the previous Stylus Pro 7600/9600 and the Stylus Pro 7400/7800/9400/9800 are pressure pump and the number of flushing boxes and maintenance tanks. The pressure pump is newly employed for the Stylus Pro 7400/7800/9400/9800, and 9400/9800 are equipped with two flushing boxes and two maintenance tanks (each box and tank are installed on both left and right of the printer). The waste ink from the cleaning mechanism is transported to the waste ink pad (Maintenance Tanks) through the tubes.
The main components in the cleaning mechanism are explained below.

- Pressure Pump
  A case and film are welded at the Ink Pack side in the Ink Cartridge Case. By blowing air into the section via the pump tube connected to each of the left and right Ink Cartridges, press the Ink Pack so that the ink inside the pack is supplied to the print head mechanism.
- Pump assembly (head cleaner)
  When the head is in the capped position (valve closed), the pump motor creates a vacuum that sucks ink from the nozzles. This is used for removing ink from the nozzles and nozzle plate, initial ink charge, as well as cleaning. The waste ink is transported to the waste ink pads through the tube.
- Head cleaner
  The head cleaner of the Stylus Pro 7400/7800/9400/9800 employs a rubber only cleaner not like the rubber-and-felt combined cleaner used for the Stylus Pro 7600/9600. It wipes or rubs off ink and foreign materials from the nozzle surface.
- Pump motor (stepping motor)
  The function of the pump motor differs according to its rotating direction as follows:
  - Clockwise rotation: Releases the pump and resets the wiper
    Drives the HD_SLIDE (head gap adjustment) cam.
    See "Platen Gap Adjustment Unit" *(p.153)*.
  - Counter clockwise rotation: Drives the pump assembly (pump suction, wiper reset)

Table 2-6. Pump Drive Modes

Suction Speed (Drive Mode)	Pump Wheel Revolving Speed	Suction Amount	Motor Frequency (2-2 phase conversion)
Low speed (IS4)	0.55 rev/sec	0.3g/sec	182 Hz
Standard (IS3)	1.92 rev/sec	1.1g/sec	634 Hz
High speed (IS2)	3.12 rev/sec	1.3g/sec	1030 Hz
Super-high speed (IS1)	5.04 rev/sec	1.3g/sec	1664 Hz

Note : The Motor Frequency values above, given only for information, are values when a 4-phase, 48-pole stepping motor is driven in 2-2 phase. The same for the motor drive stepping count.

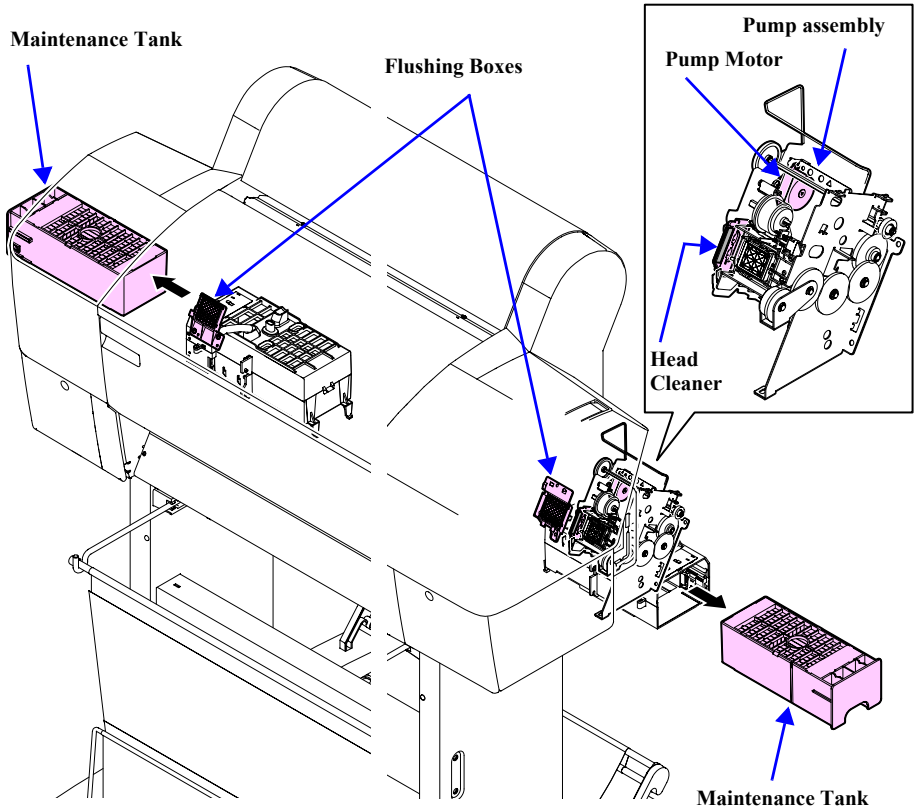

Figure 2-14. Cleaning Mechanism Components

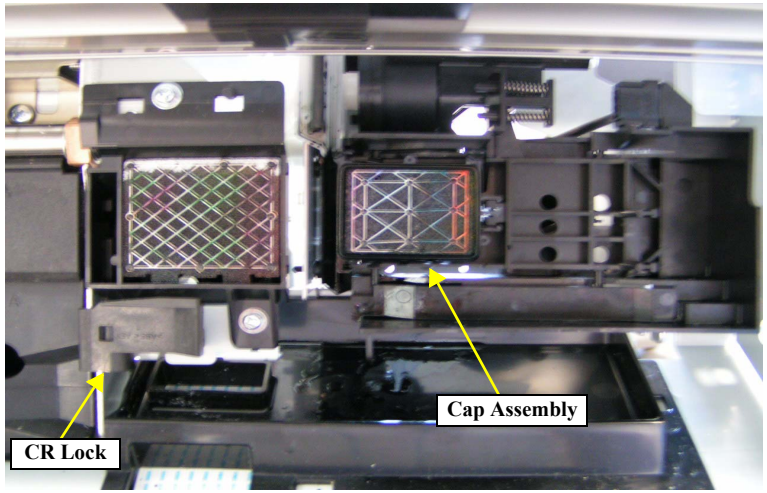

Figure 2-15. Cleaning Mechanism Components

- ☐ Cap assembly
  When not printing, the print head (should) rest on the cap assembly to ensure that the nozzles don't clog. Also, the print head is in the capped position during ink charging, cleaning, and so on.
- ☐ Flushing box
  Flushing (dummy printing) is performed over the flushing box, and the flushed ink flows through the tube to the waste ink pads.
- ☐ CR Lock Mechanism
  If the carriage moves from the printable area to beyond the capping (CR_HOME) position to the right, the carriage moving prevention lock is engaged.
  The CR lock mechanism uses the cutter solenoid in common. When the cutter solenoid goes ON in the capping position, the CR lock is released.
- ☐ Maintenance Tank (Waste ink absorber)

NOTE: *The Ink System Terms used in the above text are explained in the following table.*

Table 2-7. Explanation of Operation

Operation	Explanation
Carriage (CR) Lock	• This is the carriage stop position when the power is Off. • The time when the carriage is in the standby position (home position) with the power ON and with no paper loaded and no print data to print.
Ink Initial Filling	• This is the operation where the head is filled with ink for the first time. When the first ink cartridge is inserted (after all 4 cartridges (Stylus Pro 7400/9400) or all 8 sets of two cartridges (Stylus Pro 7800/9800) have been inserted), the ink initial filling operation is performed automatically (some operation should be performed manually). • The initial filling flag is set when the printer is shipped from the factory, then after this operation, the initial filling flag is reset. The initial filling flag is also set after executing “Head Rank Input”.
Flushing	• In order to prevent the viscosity of the ink inside the head nozzles from increasing, the ink inside the flushing box is flushed out. • Flushing is done when paper is set, when printing from the standby state, during continuous printing, during paper Eject, during paper cutting, etc.
Empty Suction Operation	• After ink is sucked up, the remaining ink inside the cap is sucked up and the ink adhering to the head nozzle surface is removed. • Through flushing, etc., the ink that has accumulated in the cap is sucked up and discharged.
Wiping Operation	The carriage is moved from right to left along the rubber side of the wiper (the right half of the wiper plate) incorporated in the pump unit so that the head surface is rubbed with the rubber of the wiper. Purpose: • After ink suction, removes the ink and other substances adhering to the head surface. • Ensures close contact of the cap.
Capping	In order to prevent the ink viscosity from increasing while it is being kept, a rubber cap is placed over the print head nozzles when entering a shutdown operation.

2.2.5 Ink Supply Mechanism

The Stylus Pro 7800/9800 have two Ink Holders (I/H) on left and right side of them and each I/H carries 8 cartridges for 8 colors. A projection and unique marking are placed on each color ink cartridge case to prevent wrong insertion so that the correct cartridge is inserted in the right direction.

☐ Explanation of valve mechanism mounted on the cartridge
The valve opens and closes when the ink cartridge lever is manually moved up or down.

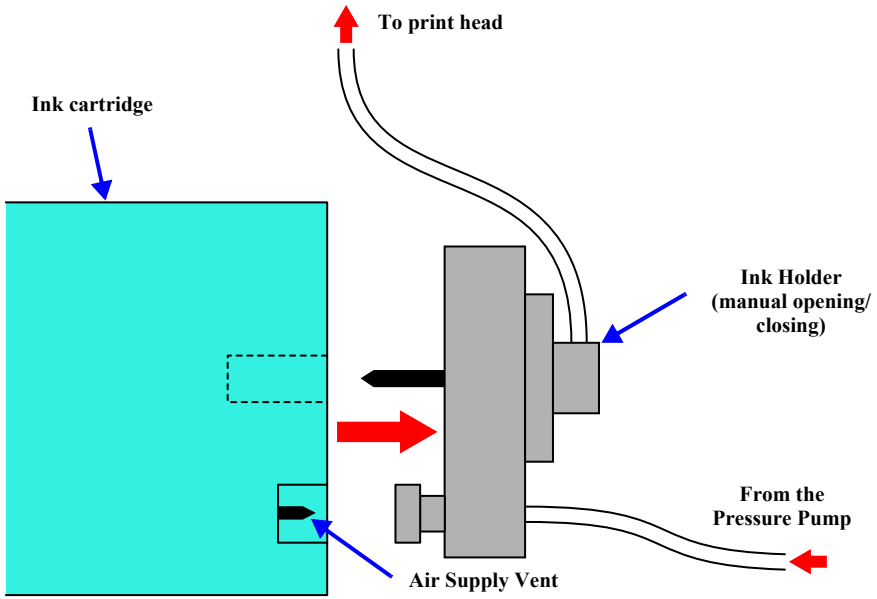

Figure 2-16. Valve Mechanism

The ink flow is as shown below.
Each color's ink cartridge → Each color's I/H (Ink Holder) → Each color's ink tube → Each color's head dumper (carriage) → Print Head. The information in the NVRAM of each color ink cartridge is sent through the CSIC Relay Board in each ink holder and stored in memory on the CSIC Board.
The CSIC Board stores various pieces of information, such as ink colors and remaining amount of ink. See "Ink Info Menu" *(p.104)*.

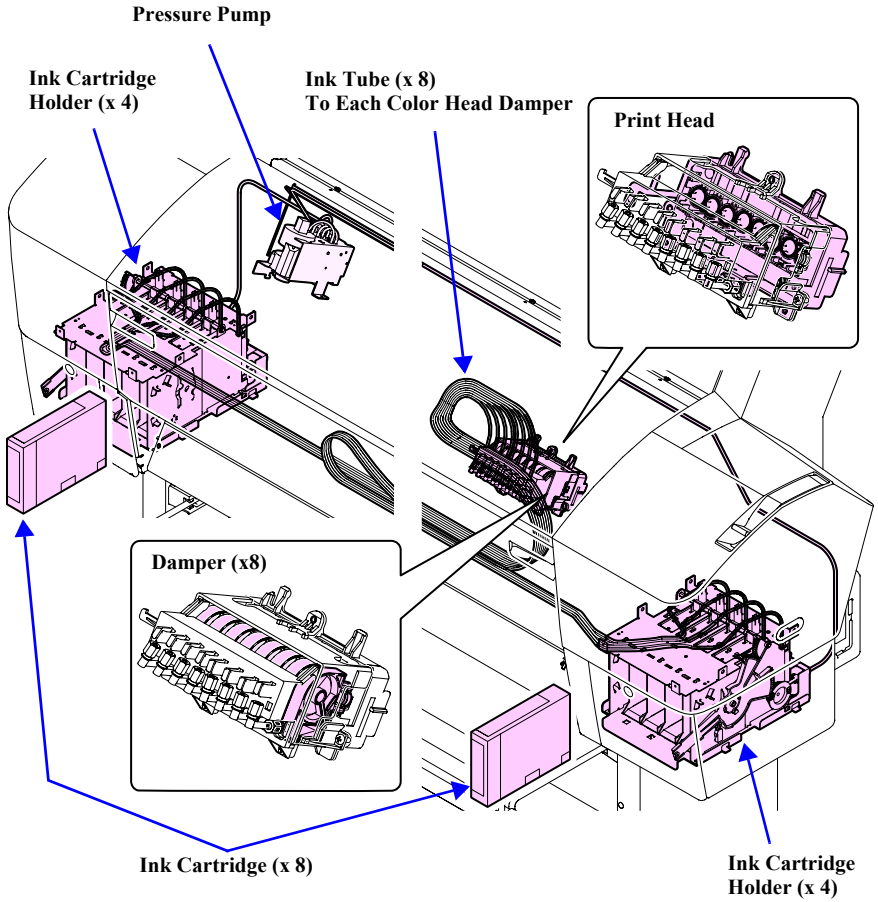

Figure 2-17. Ink Supply Mechanism

2.2.6 Others

COVER SENSOR

In order to detect whether the front cover on the lower front of this printer is open or closed, a cover sensor is mounted on the printer on the left side where the front cover opens and closes.
This sensor carries out control of operating and stopping of the CR motor and PF motor drive circuits via the MAIN board's logic circuit after detecting the cover's status. This control is the same when the paper support level is in the release state.

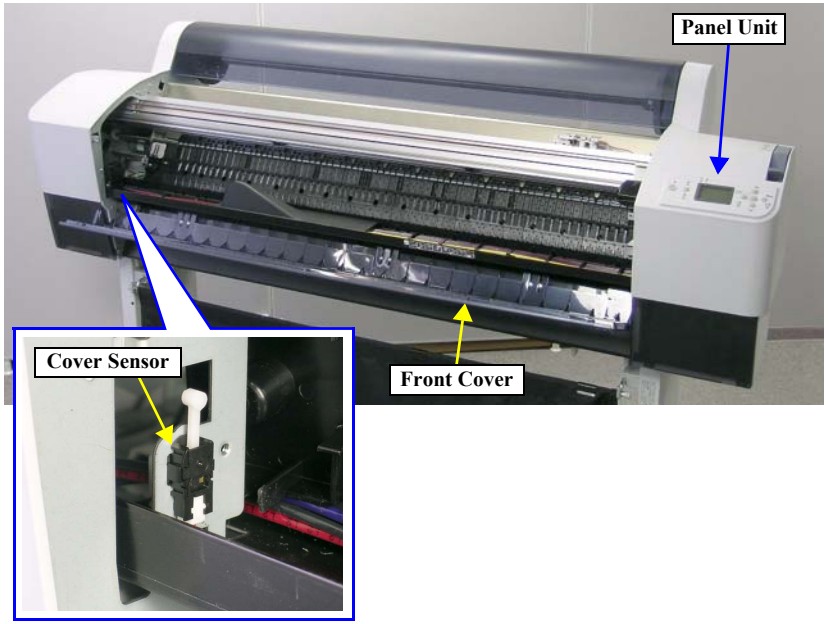

Figure 2-18. Cover Sensor Panel Unit

CIRCUIT BOARD PLACEMENT

The panel unit is located on the right front of the printer and the AC inlet, power supply circuit board and the MAIN circuit board are mounted in the compartment on the printer's rear side.

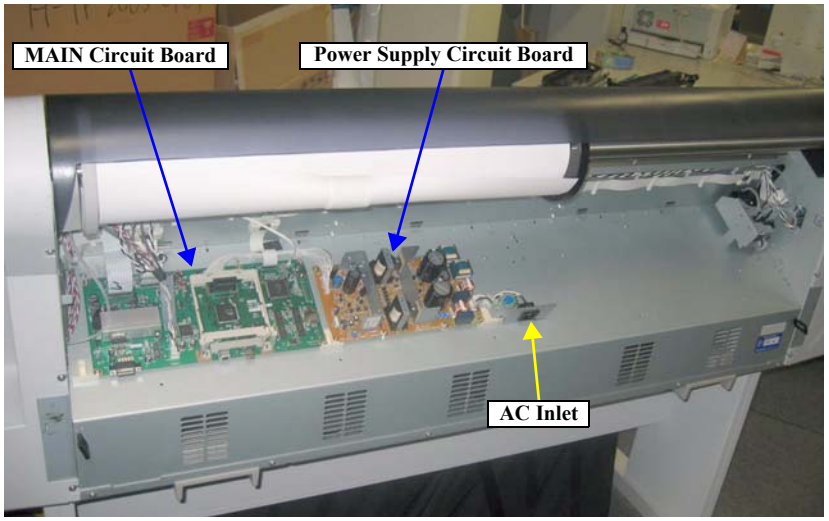

Figure 2-19. Circuit Board Layout

2.3 Outline of Power Supply Circuit Board

This section describes the operation of C594 MAIN Board, which controls and drives the printer mechanism of the printer.

NOTE: *For details of each circuit, refer to Chapter 7.*

☐ Explanation of major elements on C594 MAIN Board

Table 2-8. Major Elements on C594 Main Board

Name/Code	Location	Function
SH-3 HD6417709S	IC14	32 bit RISC-CPU • Drive clock frequency = 144 MHz
E05C25BB	IC21	Custom ASIC 1. Print data processing • Rasterizer • Head drive control 2. Mechanism control (motors and solenoids) 3. Sensor control 4. USB2.0 I/F
E09A54RA	IC17, 18	Custom ASIC • Head drive voltage waveform generation control
Flash Memory	IC3	Flash Memory (16Mbit) • For storage of control program (firmware) • Saving of various setting parameters and control information
SD-RAM	IC2/9 IC7/10	System memory* 256mbit x 16
L6203	IC11	PF Motor Drivers IC • PWM constant current drive control
A3958	IC4	CR Motor Drivers IC • PWM constant current drive control
A6628	IC6	Pump Motor/Pressure Motor Drivers IC

Note "*": Stylus Pro 7400/7800: IC2/9 only (64MByte)
Stylus Pro 9400/9800: IC2/9 and IC7/10 (128MByte)

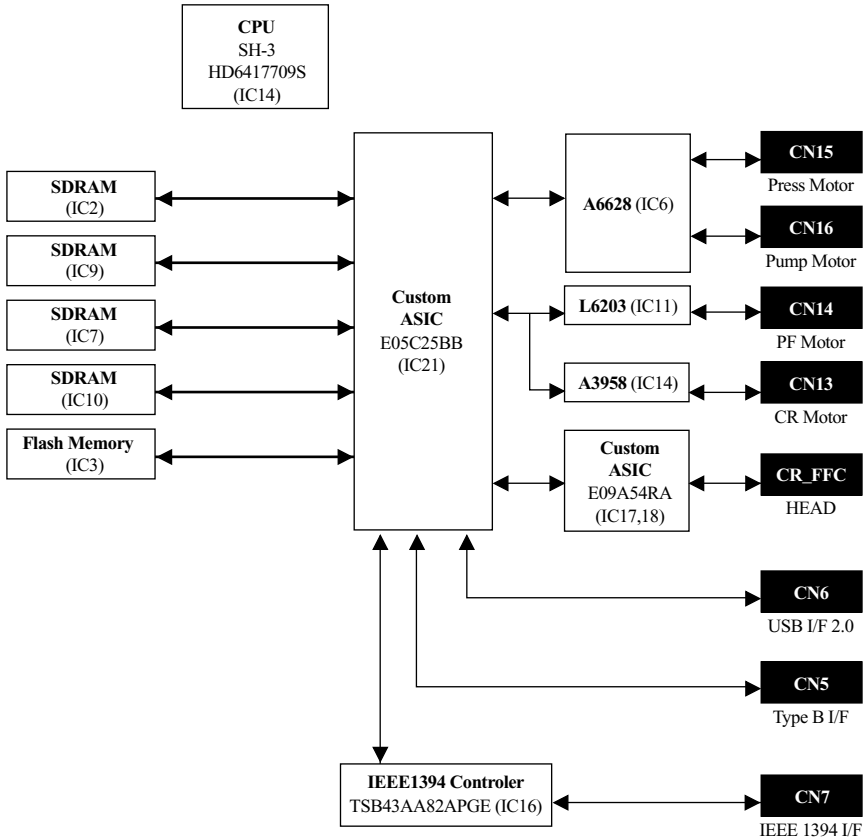

Figure 2-20. C594 MAIN Board Circuit Block Diagram

2.4 Outline of Power Supply Circuit Board

The 100 V AC power from the wall outlet is supplied via the power cable, an accessory of Stylus Pro 7600/9600, into the Inlet of the printer and to the Power Supply Circuit Board.
The power switch constitutes a secondary power switch system. The secondary power switch system operates as follows: even with the power switch turned off, the Power Supply Circuit Board is operating by a slight power as long as the power cable is connected.

CAUTION

Even after the power switch is turned off, the Power Supply Circuit Board does not stop operating immediately, but power is kept on until the ink system ending sequence is complete.
Do not disconnect the power cable or do not shut off power by turning off any power switch other than that on the printer.

The Power Supply Circuit Board is equipped with a fuse for overcurrent protection. The rating of the fuse is:

Table 2-9. Fuse Rating

Fuse Rating
250 VAC/6.3 A

There are three control signals between the C594 MAIN Board and the Power Supply Circuit Board as shown in the table below.

Table 2-10. Explanation of Operation

Signal Name	Function	
REM_ON (MAIN→ Power Supply)	Operating	Turned ON/OFF by C594 MAIN Board. • When these terminals are shorted, the drive system power supplies 24 VDC and 42 VDC become inactive.
	Off	• When these terminals are open (= H), the drive system power supplies 24 VDC and 42 VDC become 0 VDC. • The 5 VDC power is not controlled with these terminals.
AC_OFF (MAIN← Power Supply)	Operating (= H)	When each output from the Power Supply Circuit Board has become inactive because of turning off of the power switch or when the input voltage has dropped below the rated voltage value, “H” signal is sent to the C594 MAIN Board.
	Off (= L)	The power switch is turned on and the Power Supply Circuit Board Unit starts operating so that each output becomes active. “L” signal is sent to the C594 MAIN Board.
POW_ON/OFF (Panel /MAIN→ Power Supply)	Operating	Connected to the power switch on the Panel Unit. • These terminals are shorted when the switch is ON. The Power Supply Circuit Board becomes active.
	Not operating	• These terminals are open when the switch is OFF. The Power Supply Unit keeps operating for several seconds and then turns off.

2.5 Colorimetric Calibration (Color ID) Overview

This printer employs “Colorimetric Calibration (Color ID)” to correct unit-to-unit variations in color.
“Colorimetric Calibration (Color ID)” corrects not only the weight of ink droplets which differs according to the characteristic of individual printhead but variable factors such as drive circuit and voltage, which provides a higher-accuracy calibration.

OVERVIEW

1. **Printing/ Measuring the color of a correction pattern.**
   The calibration is performed by printing a correction pattern with a completed product and measuring the color of the pattern using a calibrator.
2. **Writing the correction value.**
   Write the correction value that was calculated from the value obtained by color measurement to the NVRAM on the main board.
3. **Reflecting the correction value.**
   The printer driver reads the correction value stored in the NVRAM during printing, and correct the dot generation amount for each dot size in the print data.

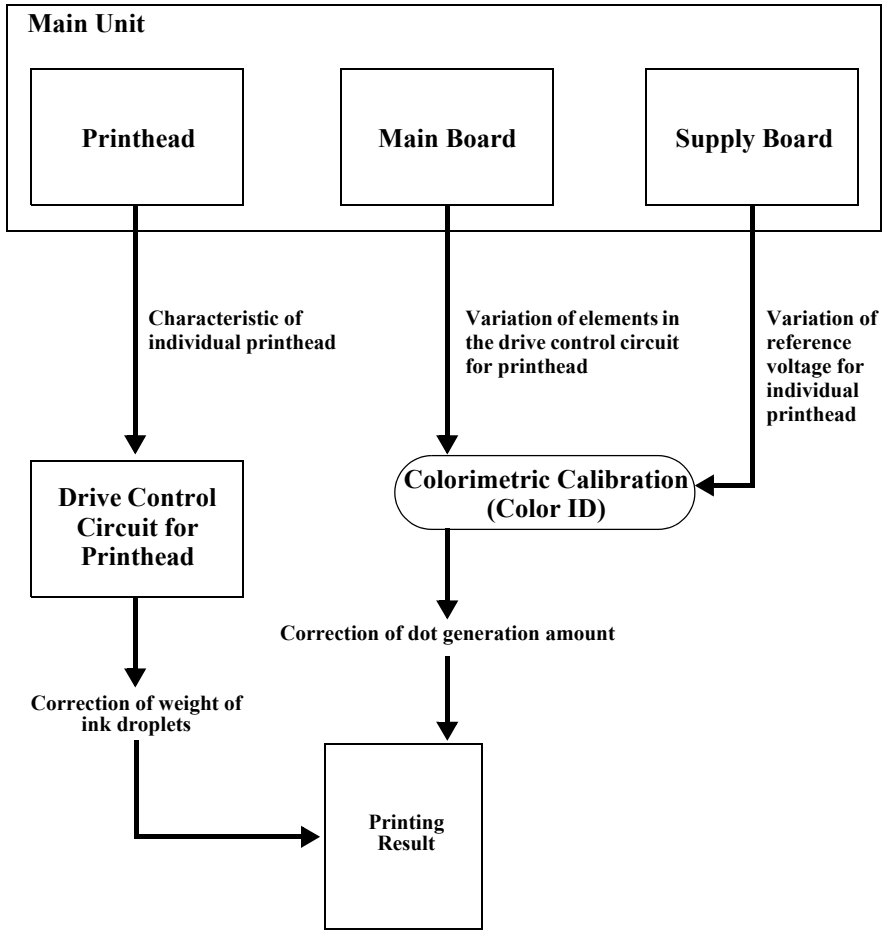

Figure 2-21. Colorimetric Calibration (Color ID) Image

CHAPTER

3

TROUBLESHOOTING

3.1 Overview

This section explains the basic procedure for troubleshooting problems on the printer quickly and efficiently.

3.1.1 Preliminary Check

Make sure to verify or perform the following basic items whenever servicing the printer.

1. There is no foreign material which interferes with the proper operation of the printer.
2. Print out the status sheet following the procedure below.
   1. Check that the printer is in "Ready" status, and press the [Menu ▶] button and select TEST PRINT by pressing the [Paper Feed ▼] button.
   2. Press the [Menu ▶] button again and press the [Paper Feed ▼] button to select STATUS SHEET.
   3. With the STATUS SHEET highlighted, press the [Menu ▶] button and [Enter ↵] button to print the status sheet.

   Check the information printed on the status sheet to find out possible causes of the error; if the main units have reached their end of life, or if there is something wrong with the user-defined panel settings. If it is the panel setting error, see Step 9.
3. Both outside and inside of the printer are free of significant dirt. Clean it if significant dirt is observed.
4. None of the parts or components of the printer are missing, chipped or damaged.
5. All of the harnesses are free of damages and properly connected to their connectors correctly.
6. The cams and gears in the printer mechanism are engaged correctly showing no signs of wear.
7. When smudges appear on printed pages, clean the rubber rollers in the printer mechanism if it solves the problem.
8. The rubber rollers in the printer mechanism are engaged correctly showing no signs of wear.
9. Initialize the NVRAM on the C594 Main Board (reset the user-defined panel settings to their factory default) if necessary.
   Execute the DEFAULT PANEL in the Maintenance mode.

WARNING

When handling the lithium battery used for backup of the RTC on the Main Board, strictly follow the safety instructions given in "4.1.1 Precautions" *(p.208)*.

CAUTION

- **Before disassembling/reassembling the printer, be sure to turn the power switch OFF, confirm the panel display disappears and unplug the power code.**
- **Always use the recommended tools for disassembling/ reassembling, adjusting or servicing the printer.**
- **Always use the specified lubricant and adhesive.**
- **Be sure to perform the required adjustments.**

3.1.2 Troubleshooting Procedure

Follow the flowchart given below to troubleshoot problems efficiently.

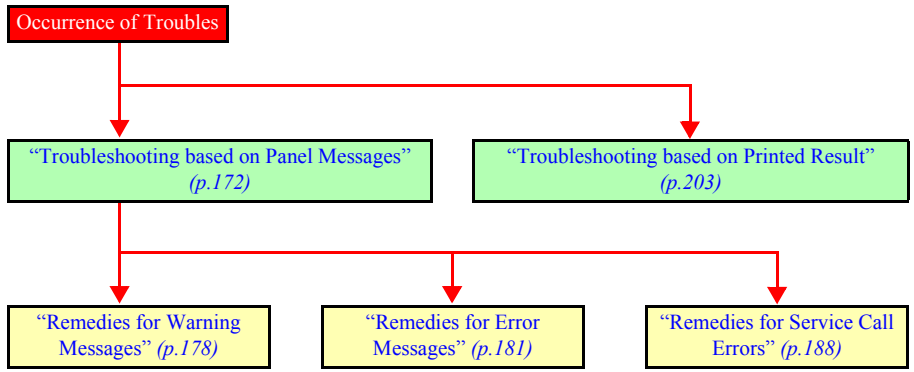

3.2 Troubleshooting based on Panel Messages

The printer runs diagnostic checks on itself according to various conditions detected by sensors. If an error condition is detected as a result of the self-diagnosis, the printer displays the corresponding error message on its LCD panel.
This section explains the error messages and provides remedies for them.

3.2.1 List of Panel Messages

The panel messages displayed by the printer are listed in the table below in the order of ascending priorities.

NOTE: *Messages in blue-colored rows are Warning messages, and those in yellow-colored rows are Service Call error messages.*

Table 3-1. List of Panel Messages

Panel Message	Printer Condition	LED Indication				Reference Pages
		Power	Pause	Ink Check	Paper Check	
MAINTENANCE TANK NEARLY FULL	The Maintenance Tank is in near full state.	---	---	Flashing	---	p.178
INK LOW	The remaining amount of ink is low. *1	---	---	Flashing	---	p.178
PAPER OUT LOAD PAPER	The printer run out out of paper.	ON	ON	---	ON	p.181
MAINTENANCE REQUEST XXXX	A maintenance is required.	---	---	---	Flashing*2	p.178
PAPER LOW	The remaining amount of loaded paper is low.	---	---	---	Flashing	p.180
CLEANING ERROR REMOVE THICK PAPER	The printer cannot run a cleaning.	ON	ON	---	ON	p.181
CLEANING ERROR PRESS PAUSE BUTTON	The printer failed to run a cleaning.	ON	ON	---	Flashing	p.181
SENSOR ERROR LOAD DIFFERENT PAPER	The Ink-mark sensor caused a SN gain error (paper type identification error).	ON	ON	---	Flashing	p.181
PAPER EJECT ERROR REMOVE PAPER FROM PRINTER	The printer failed to eject paper.	ON	ON	---	Flashing	p.181
PAPER OUT LOAD PAPER	The printer run out of roll paper.	ON	ON	---	ON	p.181
BORDERLESS ERROR LOAD CORRECT SIZE PAPER	The printer cannot perform borderless printing (no margin on all sides) with the loaded paper because of the paper size.	ON	ON	---	Flashing	p.182

Continued to the next page

Table 3-1. List of Panel Messages (continued)

Panel Message	Printer Condition	LED Indication				Reference Pages
		Power	Pause	Ink Check	Paper Check	
PAPER ERROR LOAD PAPER PROPERLY	The paper is not loaded correctly.	ON	ON	---	Flashing	p.182
PAPER SKEW LOAD PAPER PROPERLY	The paper is loaded at an angle/Cut sheet loading error	ON	ON	---	Flashing	p.183
PAPER CUT ERROR REMOVE UNCUT PAPER	The printer failed to cut the paper. *3	ON	ON	---	Flashing	p.183
COMMAND ERROR CHECK DRIVER SETTINGS	The printer failed to receive a print data.	Flashing	ON	Flashing	Flashing	p.183
MISMATCH ERROR MAKE SURE THAT THE INK CARTRIDGE AND DRIVER SETTINGS MATCH	An ink cartridge error	Flashing	ON	Flashing	Flashing	p.183
PAPER SETTING ERROR LOAD ROLL PAPER	The roll paper is not set correctly.	ON	ON	---	ON	p.184
PAPER SETTING ERROR LOAD CUT SHEET PAPER	The cut sheet paper is not set correctly.	ON	ON	---	ON	p.184
CONVERSION CRTG LIFE CONVERSION CRTG NEAR END OF SERVICE LIFE	The conversion cartridge reached near end of its life.	Flashing	ON	ON	OFF	p.180
CONVERSION CRTG LIFE REPLACE CONVERSION CRTG WITH A NEW ONE	The conversion cartridge reached the end of its life.	Flashing	ON	ON	OFF	p.184
INK OUT INSTALL NEW CARTRIDGE	The ink cartridge is empty. *4	ON	ON	ON	OFF	p.184
INK CARTRIDGE ERROR CHECK CARTRIDGE	The black cartridge is wrong (Photo Black or Matte Black).	ON	ON	ON	OFF	p.184
	The product code of the ink cartridge is wrong.	ON	ON	ON	OFF	p.184
INK CARTRIDGE ERROR INSTALL CORRECT CARTRIDGE	Wrong destination	ON	ON	ON	OFF	p.185
	An ink cartridges that cannot be used with the printer is installed.	ON	ON	ON	OFF	p.185
INK CARTRIDGE ERROR CHECK CARTRIDGE	The logo of the ink cartridge is wrong.	ON	ON	ON	---	p.185
INK CARTRIDGE ERROR REPLACE CARTRIDGE	Cartridge failure or CSIC error	ON	ON	ON	OFF	p.185

Continued to the next page

Table 3-1. List of Panel Messages (continued)

Panel Message	Printer Condition	LED Indication				Reference Pages
		Power	Pause	Ink Check	Paper Check	
NO CARTRIDGE INSTALL INK CARTRIDGE	No ink cartridge is installed.	ON	ON	ON	---	p.185
MAINTENANCE TANK FULL REPLACE THE LEFT SIDE MAINTENANCE TANK	The Maintenance Tank on the left side of the printer is full. (Stylus Pro 9400/9800)	ON	ON	ON	---	p.185
MAINTENANCE TANK FULL REPLACE THE RIGHT SIDE MAINTENANCE TANK	The Maintenance Tank on the right side of the printer is full. (Stylus Pro 9400/9800)	ON	ON	ON	---	p.185
MAINTENANCE TANK FULL REPLACE THE MAINTENANCE TANK	The Maintenance Tank is full. (Stylus Pro 7400/7800)	ON	ON	ON	---	p.185
MAINTENANCE TANK NEAR FULL REPLACE THE LEFT SIDE MAINTENANCE TANK	The Maintenance Tank on the left side of the printer is near full. (Stylus Pro 9400/9800)	ON	ON	Flashing	---	p.185
MAINTENANCE TANK NEAR FULL REPLACE THE RIGHT SIDE MAINTENANCE TANK	The Maintenance Tank on the right side of the printer is near full. (Stylus Pro 9400/9800)	ON	ON	Flashing	---	p.185
MAINTENANCE TANK NEAR FULL REPLACE THE MAINTENANCE TANK	The Maintenance Tank is near full. (Stylus Pro 7400/7800)	ON	ON	Flashing	---	p.185

Continued to the next page

Table 3-1. List of Panel Messages (continued)

Panel Message	Printer Condition	LED Indication				Reference Pages
		Power	Pause	Ink Check	Paper Check	
INK LEVER LOWER THE LEFT INK LEVER	The left ink lever is released.*4	ON	ON	ON	---	p.185
INK LEVER LOWER THE RIGHT INK LEVER	The right ink lever is released.*4	ON	ON	ON	---	p.185
COVER OPEN CLOSE COVER	The front cover is open.	ON	ON	---	---	p.186
LEVER RELEASED LOAD PAPER	The paper set lever is released.	ON	ON	---	ON	p.186
LEVER RELEASED LOWER THE PAPER SET LEVER	The paper set lever is released during printing.	ON	ON	---	ON	p.186
PAPER JAM REMOVE PAPER	A paper jam occurred.	ON	ON	OFF	Flashing	p.187
INK CARTRIDGE INSTALL INK CARTRIDGE	The ink lever is released and no cartridge is installed yet.	ON	ON	ON	OFF	p.187
NO MAINTENANCE TANK INSTALL THE LEFT SIDE MAINTENANCE TANK	The Maintenance Tank is not installed on the left side of the printer. (Stylus Pro 9400/9800)	ON	ON	ON	---	p.187
NO MAINTENANCE TANK INSTALL THE RIGHT SIDE MAINTENANCE TANK	The Maintenance Tank is not installed on the right side of the printer. (Stylus Pro 9400/9800)	ON	ON	ON	---	p.187

Continued to the next page

Table 3-1. List of Panel Messages (continued)

Panel Message	Printer Condition	LED Indication				Reference Pages
		Power	Pause	Ink Check	Paper Check	
NO MAINTENANCE TANK INSTALL THE MAINTENANCE TANK	The Maintenance Tank is not installed on the printer. (Stylus Pro 7400/7800)	ON	ON	ON	---	p.187
F/W INSTALL ERROR UPDATE FAILED RESTART THE PRINTER	The printer failed to update the firmware.	Flashing	Flashing	Flashing	Flashing	p.187
I/F CARD ERROR CHECK CARD TYPE	A type B optional interface error	Flashing	Flashing	Flashing	Flashing	p.187
PRINTER ERROR RESTART THE PRINTER	Rebooting the printer is required.	Flashing	Flashing	Flashing	Flashing	p.187
CARRIAGE LOCKED RELEASE THE CARRIAGE LOCK	The Carriage is locked.	Flashing	Flashing	Flashing	Flashing	p.187
Service Call NNNNNNNNN	Service Call	Flashing	Flashing	Flashing	Flashing	See Table 3-2.

Note "*1": If INK LOW and INK OUT errors occur at the same time, the corresponding indicators flashes for “LOW” state, and turns ON for “OUT” state.

"*2": Lights for 100 ms at an interval of five seconds.

"*3": When this error occurs for the first time after replacing the cutter, the printer runs the cutter replacement sequence. See “1.4.4.32 Cutter Replacement” *(p.93)* for details about the sequence.

"*4": While releasing the ink lever for replacing ink cartridges, the INK OUT and INK LEVER messages are displayed alternately at intervals of three seconds.

Table 3-2. List of Service Call Errors

Error Code	Description	Reference Pages
00000101	The CR Motor reached its end of life.	p.188
00010000	PF Encoder check error	p.189
00010001	The PF Motor is out of step.	p.190
00010002	Overcurrent occurred on the PF Motor.	p.190
00010003	The PF Motor out of position time-out error	p.191
00010004	CR Encoder check error	p.191
00010005	CR Motor is out of step.	p.192
00010007	The CR Motor out of position time-out error	p.192
00010008	Servo interrupt watchdog time-out error	p.193
00010009	System interrupt watchdog time-out error	p.193
0001000A	Carriage home position detection error	p.193
0001000C	PG home position detection error	p.194
00010014	Failure of pressurizing	p.194
0001001B	Head driver (TG) temperature error	p.195
0001001D	CR servo parameter error	p.195
0001001E	PF servo parameter error	p.196
00010020	CSIC reading/writing error	p.196
00010023	RTC analyzing error	p.196
00010026	RTC communication error	p.197
00010027	Pressure pump micro air-leak error	p.197
00010028	Head error	p.197
0001002A	CR ASIC ECU error	p.197
0001002D	The Cleaning Unit reached its end of life.	p.197
00010035	Pump phase detection error	p.198
00010036	Type-B board installation error	p.198
00010037	Head thermistor error	p.198
00010038	Transistor thermistor error	p.198
0001003E	Pressure Sensor failure	p.198
0001003F	The Pressure Motor reached its end of life.	p.199

Table 3-2. List of Service Call Errors

Error Code	Description	Reference Pages
00010040	Printing position error	p.199
00020000	NVRAM error	p.199
00020002	SDRAM error	p.199
00020003	Boot program sum error	p.200
0002000A	Program load error	p.200
0002000B	The internal memory is insufficient.	p.200
0Dxxxxxx	An error code for debugging	p.200
0Exxxxxx	A time-lag of the RTC timer	p.201
100000E0	CPU address error (load)	p.201
10000100	CPU address error (store)	p.201
10000180	CPU reserved command code exception error	p.201
100001A0	CPU slot undefined command exception error	p.202
100001C0	The AC power is shut off.	p.202
100005C0	CPU DMA address error	p.202
10000xxx	CPU error	p.202

3.2.2 Remedies for Warning Messages

When a Warning error occurs, the printer displays a Warning message instead of "READY" or "PRINTING" messages, however, it does not interfere with printing operation.
The Warning message does not disappear unless the cause of it is eliminated.

The following tables explains the Warning messages and remedies.

MAINTENANCE TANK NEARLY FULL

Item	Description
Description	The Maintenance Tank is in near full state
LED Indication	Ink Check LED: Flashing
Cause	Remaining space of the Maintenance Tank became lower than 10 percent of its full capacity.
Remedy	Replace the Maintenance Tank with a new one.

INK LOW

Item	Description
Description	The remaining amount of ink is low.
LED Indication	Ink Check LED: Flashing
Cause	The remaining amount of ink became lower than the specified value.
Remedy	Replace the ink cartridge with a new one.

MAINTENANCE REQUEST XXXX

- Description

  A maintenance is required.

- LED Indication

  Paper Check LED: Lights for a moment at intervals of five seconds.

- Displayed Code

  The "NNNN" is a hexadecimal code which correspond to the bit numbers assigned to error conditions as shown in the table below.

Table 3-3. Bit Assignments

Bit	Assigned Error Condition	Remark
0	The waste ink tank reached its end of life.	This does not occur on the printer.*
1	The CR Motor reached its end of life.	The number of carriage movement cycles reached the specified value.
2	Ignores nozzle check error	This does not occur on the printer.*
3	Battery exhaustion	The RTC backup battery run down.
4	Dot missing detection device AGC error	This does not occur on the printer.*
5	Head Unit reached its end of life.	This does not occur on the printer.*
6	The Cleaning Unit reached its end of life.	The pump counter reached the specified upper limit.
7	The date and time has not been set.	---
8	A momentary drop in voltage of the RTC backup battery	---
9	The Paper Feed Roller reached its end of life.	This does not occur on the printer.*
10	The Pressure Pump reached its end of life.	The Pressure Pump counter reached the specified upper limit.
11-31	Reserved	---

Note "*": The bit number is reserved.

- Description

  The most of the MAINTENANCE REQUEST errors indicate near-end of life status of the part or unit.

☐ Remedy

NNNN	Cause of the Error	Parts or Components need to be Replaced	Remedies
0002	The number of carriage movement cycles reached the specified value.	See " Service Call 00000101 (p.188)".	See " Service Call 00000101 (p.188)".
TBD	The RTC backup battery run down or is not installed.	RTC backup battery	Replace the RTC backup battery and execute the following items. • TBD
0040	The pump counter reached the specified upper limit.	☐ PUMP CAP ASSY. ☐ CLEANER, HEAD, A, ASP ☐ BOX ASSY., FLUSHING (R) ☐ BOX ASSY., FLUSHING (L) ☐ TUBE, INK, WASTE; R ☐ TUBE, INK, WASTE; L	Replace the parts listed on the left column and execute the following items. • TBD
TBD	The date and time has not been set.	---	Execute the following items. • TBD
TBD	A momentary drop in voltage of the RTC backup battery	---	Leave the printer for a while.
0400	The Pressure Pump counter reached the specified upper limit.	Pressure Pump Unit	Replace the Pressure Pump Unit and execute the following items. • TBD

CHECK POINT

The parts which need to be replaced when "0040" (near-end of life of the Cleaning Unit) occurred

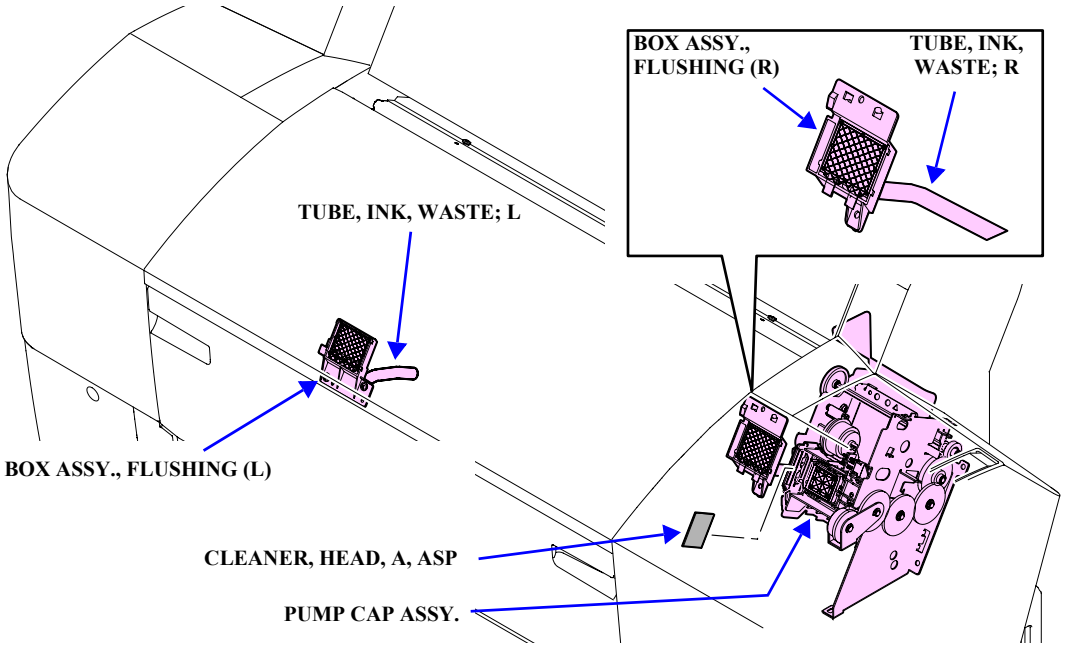

PAPER LOW

Item	Description
Description	The remaining amount of loaded paper is low.
LED Indication	Paper Check LED: Flashing
Cause	This occurs when the REMAINING PPR SETUP in the Maintenance mode is set to “ROLL” and the counter becomes lower than the preset near-end value.
Remedy	Enter a value larger than the preset near-end value in the ROLL PAPER COUNTER in the PRINTER SETUP menu.

CONVERSION CRTG LIFE
CONVERSION CRTG NEAR END OF SERVICE LIFE

Item	Description
Description	The conversion cartridge reached near end of its life.
LED Indication	• Power LED: Flashing • Pause LED: ON • Ink Check LED: ON
Cause	The remaining number of times that the Conversion Cartridge can be used became less than 10 times.
Remedy	Press the [Pause] button.

3.2.3 Remedies for Error Messages

When an error occurs, the printer displays the error message instead of “READY” or “PRINTING” messages.

The following tables explains the error messages and remedies.

PAPER OUT
LOAD PAPER

Description	Remedy
The printer run out of paper. ☐ The Paper Set Lever was set in the paper setting position with no paper loaded. ☐ A posterior end of the cut sheet or roll paper is detected in the middle of printing, and the printing is interrupted.	Release the Paper Set Lever to load paper, and reset the lever to its front position.

CLEANING ERROR
REMOVE THICK PAPER

Description	Remedy
The printer cannot run a cleaning. A paper which is thicker than 0.8 mm is detected when the printer attempted to run a cleaning.	Release the Paper Set Lever to remove the paper, and reset the lever to its front position.

CLEANING ERROR
PRESS PAUSE BUTTON

Description	Remedy
The printer failed to run a cleaning. The Ink-mark Sensor detected dot missing after running the auto cleaning.	Press the [Pause] button. The printer returns to “READY” state ignoring the dot missing condition.

SENSOR ERROR
LOAD DIFFERENT PAPER

Description	Remedy
The Ink-mark sensor caused a SN gain error The gain of the Ink-mark Sensor cannot be determined.	Release the Paper Set Lever to replace the paper with the correct one, and reset the lever to its front position. Or press the [Pause] button.
Ink-mark Sensor paper type identification error The Ink-mark Sensor cannot recognize the paper.	Release the Paper Set Lever to replace the paper with the correct one, and reset the lever to its front position. Or press the [Pause] button.

PAPER EJECT ERROR
REMOVE PAPER FROM PRINTER

Description	Remedy
The printer failed to eject paper. ☐ When the printer tried to eject the paper, it detected that another paper is left in the paper path. ☐ The paper was ejected by releasing the Paper Eject Roller.	Release the Paper Set Lever to remove the paper, and reset the lever to its front position.

PAPER OUT
LOAD PAPER

Description	Remedy
The printer run out of roll paper. ☐ The Paper Set Lever was set to its front position with no roll paper loaded when roll paper is specified in the panel setting. ☐ A posterior end of the roll paper is detected in the middle of printing, and the printing is interrupted.	Release the Paper Set Lever to load paper, and reset the lever to its front position.

BORDERLESS ERROR
LOAD CORRECT SIZE PAPER

Description	Remedy
The printer cannot perform borderless printing (no margin on all sides) The paper was not set in the position for borderless printing when the printer received a borderless print data. This prevents the printer from printing on the platen. ☐ The width of the set paper is not available for borderless printing. ☐ The paper can be used for borderless printing, but it is not set correctly.	Release the Paper Set Lever to correct the paper position, or replace the paper with a borderless printing available one. Or feed correct sized paper manually.When the paper is reset, the printer automatically detects the paper width and performs the borderless printing if the width is within the range of borderless printing. To cancel the job, press the [Pause] button and delete the job by the host computer.

PAPER ERROR
LOAD PAPER PROPERLY

Description	Remedy
The paper is not loaded correctly 1. The paper manually fed from the printer rear was not detected by the P EDGE Sensor. (this error is displayed as the PAPER ERROR, but is classified as a cut-sheet manual feed error in the printer.)	1. Release the Paper Set Lever to remove the paper, and reset the lever to its front position. Or remove the paper from the rear of the printer if it is not nipped properly.
2. The paper set position is incorrect for performing a paper initialization operation.	2. Release the Paper Set Lever to reset the paper correctly, and set the lever to its front position.
As the length of loaded cut-sheet paper exceeds the upper limit for the printer, the printer cannot eject the paper.	
When finished to print on roll paper, the paper was skewed and the left and right ends of the paper went beyond the printable area.	
A paper whose width is less than 180 mm is loaded.	
3. When loading a cut-sheet, the printer detected that the paper is skewed. This error occurs when the cut-sheet loading sequence is finished. The error is more likely to occur when feeding paper manually, so the Pause LED turns ON to indicate the user to press the [Pause] button to continue the job.	3. Release the Paper Set Lever to remove the paper, and reset the lever to its front position. Press the [Pause] button when the error caused by a cut-sheet loading.

PAPER SKEW
LOAD PAPER PROPERLY

Description	Remedy
The paper is loaded at an angle/Cut sheet loading error The positions of left and right ends of the roll paper change by 3 mm or more from when the printing is started to when finished the printing.	Release the Paper Set Lever to reset the paper correctly, and set the lever to its front position.

PAPER CUT ERROR
REMOVE UNCUT PAPER

Description	Remedy
The printer failed to cut the paper After paper cutting operation, the P EDGE Sensor cannot detect the leading edge of paper.	Release the Paper Set Lever to remove the paper, and reset the lever to its front position.

COMMAND ERROR
CHECK DRIVER SETTINGS

Description	Remedy
Command Error ☐ The inks specified by the printer driver are different from those installed on the printer. ☐ The print data is not supported by the printer. ☐ There is something wrong with the incoming command.	Cancel the print job and press the [Pause] button for more than 3 seconds to reset the printer.
The printer specified by the printer driver may be wrong.	Cancel the print job and press the [Pause] button for more than 3 seconds to reset the printer. Verify that the printer specified by the printer driver matches the printer connected to the computer.

MISMATCH ERROR
MAKE SURE THAT THE INK CARTRIDGE AND DRIVER SETTINGS MATCH

Description	Remedy
An ink cartridge command error ☐ The inks specified by the printer driver are different from those installed on the printer. ☐ The print data is not supported by the printer. ☐ There is something wrong with the incoming command.	Cancel the print job and press the [Pause] button for more than 3 seconds to reset the printer. Note : If the [Pause] button is pressed less than 3 seconds, the printer starts to print.

PAPER SETTING ERROR
LOAD ROLL PAPER

Description	Remedy
The roll paper is not set correctly. The paper path number specified by the remote command is different from the paper type set by the panel. The paper path sent by the remote command is prioritized and the printer causes the error according to the command if the paper path setting of the printer does not match with that of the remote command.	If the loaded paper type is different from the panel setting, change the panel setting accordingly.

PAPER SETTING ERROR
LOAD CUT SHEET PAPER

Description	Remedy
The cut sheet paper is not set correctly. The paper path number specified by the remote command is different from the paper type set by the panel. The paper path sent by the remote command is prioritized and the printer causes the error according to the command if the paper path setting of the printer does not match with that of the remote command.	Press the [Pause] button to reset the panel setting. In this case, the panel setting is returned to the default set by the printer.

CONVERSION CRTG LIFE
REPLACE CONVERSION CRTG WITH A NEW ONE

Description	Remedy
The conversion cartridge reached the end of its life. The number of times that the Conversion Cartridge is used exceeded 100 times.	Replace the conversion cartridge with a new one. Or press the [Pause] button to continue the black ink replacing operation.

INK OUT
INSTALL NEW CARTRIDGE

Description	Remedy
The ink cartridge is empty All of the ink in the ink cartridge was used.	Replace the ink cartridge with a new one.

INK CARTRIDGE ERROR
CHECK CARTRIDGE

Description	Remedy
The black cartridge is wrong (Photo Black or Matte Black). A black ink cartridge different from that specified in the printer is installed.	Replace the black ink cartridge with the one specified by the printer. Or press the [Pause] button and change the black ink type setting of the printer.
The product code of the ink cartridge is wrong. The product code of the installed ink cartridge is wrong (except the photo black/ matte black mismatching error)	Replace the ink cartridge with a correct one. Although the printer can recover from the error by pressing the [Pause] button, it is not recommended because it results in mixing-up the different type of inks.

INK CARTRIDGE ERROR
INSTALL CORRECT CARTRIDGE

Description	Remedy
Wrong destination Ink cartridge intended to be used for another destination is installed.	Replace the ink cartridge with a correct one. Or the printer can recover from the error by pressing the [Pause] button.
An ink cartridges that cannot be used with the printer is installed. The installed ink cartridges cannot be used for the printer.	Replace the ink cartridge with the correct one.

INK CARTRIDGE ERROR
CHECK CARTRIDGE

Description	Remedy
The logo of the ink cartridge is wrong. The installed ink cartridge is not the EPSON genuine one.	Replace the ink cartridge with the correct one. Or the printer can recover from the error by pressing the [Pause] button.

INK CARTRIDGE ERROR
REPLACE CARTRIDGE

Description	Remedy
Cartridge failure or CSIC error The memory chip on the ink cartridge is damaged.	Replace the ink cartridge with a new one.

NO CARTRIDGE
INSTALL INK CARTRIDGE

Description	Remedy
No ink cartridge is installed. No ink cartridge is installed.	Install ink cartridges.

MAINTENANCE TANK FULL
REPLACE THE (LEFT (RIGHT) SIDE) MAINTENANCE TANK

Description	Remedy
The Maintenance Tank is full. The Maintenance Tank is full of waste ink.	Replace the Maintenance Tank with a new one.

MAINTENANCE TANK NEAR FULL
REPLACE THE (LEFT (RIGHT) SIDE) MAINTENANCE TANK

Description	Remedy
The Maintenance Tank is near full. The Maintenance Tank is full of waste ink.	Replace the Maintenance Tank with a new one.

INK LEVER
LOWER THE LEFT (RIGHT) INK LEVER

Description	Remedy
The Ink Lever is released The Ink Lever is raised.	Lower the Ink Lever.

COVER OPEN
CLOSE COVER

Description	Remedy
The front cover is open. The front cover is open.	Close the front cover. ☐ If the cover is opened while the printer is performing a flushing operation before feeding paper, it stops the flushing operation and resumes the flushing and feeding the paper after the cover is closed. ☐ If the cover is opened while the printer is performing the paper feeding operation, the printer stops after feeding the paper to the starting position. When the cover is closed, it starts to detect paper width and enters into ready mode. ☐ When the cover is opened while the printer is ejecting the paper, the printer causes PAPER EJECT ERROR *(p.181)*. ☐ If the cover is opened while the printer is cutting paper, the printer causes PAPER CUT ERROR *(p.183)*. ☐ When the cover is opened while turning the power OFF, the printer turns OFF after placing the cap on the printhead.

LEVER RELEASED
LOAD PAPER

Description	Remedy
The paper set lever is released. The Paper Set Lever is released.	Lower the Paper Set Lever.

LEVER RELEASED
LOWER THE PAPER SET LEVER

Description	Remedy
The paper set lever is released during printing. The Paper Set Lever is released while the printer is performing any of the following operations.	
1. Turning the power ON or OFF, or cleaning	1. Place the Paper Set Lever to its front position.
2. Feeding paper, printing or ejecting paper	2. If you interrupt the paper feeding operation by placing the Paper Set Lever to its front position, the printer performs paper set sequence and the paper type is automatically determined by the paper detection sensors (The P Rear Sensor and the P EDGE Sensor). During the paper set sequence, the printer enters into a wait state for paper setting initializing trigger. Pressing the [Pause] button backs the printer to the paper set sequence operation. (If you remove the paper without canceling the job (resetting the panel) and lower the Paper Set Lever, PAPER OUT *(p.181)* error will occur after the printer recovers from the LEVER RELEASED error.) If the P EDGE Sensor is ON with the Paper Set Lever lowered, the printer detects the condition during the paper set sequence and judges that the paper is fed from the front side. This causes a paper jam as the printer then tries to back-feed the paper and a paper jam error message will be displayed on the panel. If this happens, release the Paper Set Lever to remove the paper and back the lever to its front position.
3. During paper cutting operation	3. Cancel the cutting operation and remove the paper, then back the Paper Set Lever to its front position.

PAPER JAM
REMOVE PAPER

Description	Remedy
A paper jam occurred. A paper jam occurred.	Release the Paper Set Lever, open the front cover and remove the jammed paper. Close the front cover and turn the printer OFF. Leave the printer for a while and then turn it ON.

INK CARTRIDGE
INSTALL INK CARTRIDGE

Description	Remedy
The ink lever is released and no cartridge is installed yet. The Ink Lever is released, and no ink cartridge is installed.	Install the ink cartridge (new one) indicated on the LCD panel and lower the Ink Lever.

NO MAINTENANCE TANK
INSTALL THE (LEFT (RIGHT) SIDE) MAINTENANCE TANK

Description	Remedy
The Maintenance Tank is not installed on the printer. The Maintenance Tank is not installed on the printer.	Install the Maintenance Tank.

F/W INSTALL ERROR
UPDATE FAILED
RESTART THE PRINTER

Description	Remedy
The printer failed to update the firmware. The printer failed to update the firmware.	Turn the printer OFF and wait for a while to turn it back ON. Then retry updating the firmware.

I/F CARD ERROR
CHECK CARD TYPE

Description	Remedy
A type B optional interface error An unsupported interface card is installed.	Turn the printer OFF and remove the Type-B interface. Then turn the printer ON.

PRINTER ERROR
RESTART THE PRINTER

Description	Remedy
Rebooting the printer is required. Rebooting the printer is required during recovering form an error.	Turn the printer OFF and turn it back ON after leaving it for a while.

CARRIAGE LOCKED
RELEASE THE CARRIAGE LOCK

Description	Remedy
The Carriage is locked. The clamping plate for transportation has not been removed yet.	Remove the clamping plate.

SERVICE CALL
NNNNNNNNN

The Service Call errors cannot be remedied by the user. See "3.2.4 Remedies for Service Call Errors" *(p.188)* for the information on how to remedy each of the Service Call errors.

Description	Remedy
Service Call ☐ An error that cannot be remedied by the user is detected. ☐ Life end of a part or unit is detected which, if it is used continuously, can adversely affect the printer mechanism. ☐ The printer becomes inoperative due to unexpected operation or commands.	The printer may be able to recover from the error by turning the power OFF and back ON. If the same error occurs again and the printer cannot be used, troubleshoot the problem and replace the defective parts or components.

3.2.4 Remedies for Service Call Errors

The Service Call errors are displayed on the LCD panel to inform the user that an error which requires a service by a service personnel is occurring.
This section explains each of the Service Call errors and the remedies.

CAUTION

Be sure to return the Carriage to its home position when Service Call errors other than those listed below occur.
- **CR or PF servo-related errors**
- **CR home position detection error**
- **CPU-related errorData analyzing task error**

SERVICE CALL 00000101

☐ Description
Life end of the CR Motor (includes the Ink Tubes)

☐ Explanation
The number of Carriage movement cycles reached the specified upper limit.
- Stylus Pro 7400/7800: 3,700,000 cycles
- Stylus Pro 9400/9800: 6,300,000 cycles

If the printer is used continuously ignoring the error, it may cause the following defective conditions.
- The Ink Tubes become cracked causing leakage of ink
- Malfunction of the Carriage due to wear of the internal part of the CR Motor

☐ Remedy

1. Check the life count of the CR Motor in the "1.4.4 Panel Setting" *(p.50)*.
   Press the [Menu] button → PRINTER STATUS menu - SERVICE LIFE → CR MOTOR. *See Section 1.4.4.30 on page 84.*
   - When the life is still remaining
     Replace the BOARD ASSY., MAIN *(p.232)*.
   - When the life has expired or close to the end-of-life
     Replace the CR MOTOR ASSY. *(p.243)*.
2. As the lifespan of the CR Motor means the lifespan of the printer, the whole printer mechanism checks and corresponding maintenance works must be carried out. Especially, the following items should be carefully checked or performed.
   - Check the Head FFC for any damage such as break, scratch, etc.
   - Check the CR Timing Belt and the PF Timing Belt for any damage.
   - Check if abnormal sounds are produced from the sliding surfaces of the Guide Rail and the bearings of the Carriage Unit (wear of the bearings).
   - Check if the paper dust or any other dust accumulates on the paper path. If it does, clean it as indicated in "6.1.2 Required Maintenance Items" *(p.376)*.
   - Refer to "6.2 Lubrication" *(p.377)* and lubricate the specified points if necessary.

CHECK POINT

- **Whenever the CR Motor Assy. is replaced, the corresponding adjustment (including resetting the counter) must be carried out.** ***See Chapter 5 on page 292.***
- **Do not reset the CR TOTAL counter (CR Motor cumulative life counter).**

SERVICE CALL 00010000

☐ Description

PF Encoder check error

☐ Explanation

The printer causes this error and stops operation if it cannot detect the encoder pulse signals at intervals of the specified time during the power-on initialization operation or while the PF Motor is driving.

☐ Possible Causes

- The PF Encoder connector is disconnected.
- The PF Motor connector is disconnected.
- The Encoder harness on the PF side is broken.
- The wiring of the A and B phases are wrong (opposite)
- The wiring of the motor is wrong (opposite)
- The PF Motor shorted out.
- The PF Motor is energized continuously and kept rotating abnormally.
- The fuse for the motor driver is blown. (on the Main Board)
- The Main Board is damaged. (+42V/+24V remote control is broken)
- The Power Supply Board is damaged (42V is OFF)

☐ Check Point

1. Make sure that the PF Encoder and the PF loop scale are free of dust or foreign materials.
2. Perform the Encoder check by the "1.4.6.1 Self Testing Menu (SELF TESTING)" *(p.106)*.
3. Make sure that the PF Timing Belt is normal and its tension is appropriate.
4. Make sure that the Grid Roller rotates smoothly without any abnormal load.
5. Make sure that the PF Motor is not shorted out.
   If it does, replace the C594 Main Board together with the PF Motor.
6. Make sure that the harnesses are connected correctly and not broken.

☐ Remedy

1. Clean dirt or paper dust on the Loop Scale and check if it is damaged.
2. Reconnect the PF Encoder connector or the PF Motor connector securely.
3. Execute the PF Timing Belt Tension Adjustment *(p.307)*.
4. Replace the PF Encoder Sensor *(p.258)*.
5. Replace the PF MOTOR ASSY. *(p.255)*.
6. Replace the BOARD ASSY., MAIN *(p.232)*.

SERVICE CALL 00010001

- Description
  The PF Motor is out-of-step.
- Explanation
  The printer causes this error and stops operation if it cannot detect the specified-length encoder pulse signals within a fixed time period or when abnormally long or short pulse signals are detected while the PF Motor is rotating.
- Check Point
  1. Make sure that the PF Encoder and the PF loop scale are free of dust or foreign materials.
  2. Perform the Encoder check by the "1.4.6.1 Self Testing Menu (SELF TESTING)" *(p.106)*.
  3. Make sure that the PF Timing Belt is normal and its tension is appropriate.
  4. Make sure that the Grid Roller rotates smoothly without any abnormal load.
  5. Make sure that the PF Motor is not shorted out.
     If it does, replace the C594 Main Board together with the PF Motor.
  6. Make sure that the harnesses are connected correctly and not broken.
- Remedy
  1. Clean dirt or paper dust on the Loop Scale and check if it is damaged.
  2. Replace the PF Encoder Sensor *(p.258)*.
  3. Replace the PF MOTOR ASSY. *(p.255)*.
  4. Replace the BOARD ASSY., MAIN *(p.232)*.

SERVICE CALL 00010002

- Description
  Overcurrent occurred on the PF Motor.
- Explanation
  The printer causes this error and stops operation if an abnormal electric current beyond the prescribed range is detected at the PF Motor drive circuit on the C594 Main Board while the PF Motor is rotating or when a current beyond the prescribed range is required to be supplied to the motor.
- Check Point
  1. Make sure that the PF Loop Scale is free of dust or foreign materials.
  2. Make sure that the PF Motor is not shorted out.
     If it does, replace the C594 Main Board together with the PF Motor.
  3. Visually check if there is a point where likely to cause a short of the PF Motor harness with the frame.
- Remedy
  1. Clean dirt or paper dust on the Loop Scale and check if it is damaged.
  2. Replace the PF MOTOR ASSY. *(p.255)*.
  3. Replace the BOARD ASSY., MAIN *(p.232)*.

SERVICE CALL 00010003

- Description
  The PF Motor out of position time-out error
- Explanation
  The printer causes this error and stops operation if it detects that the paper could not be moved to the target position within a fixed time period while the PF Motor stopping operation.
- Check Point
  1. Make sure that the PF Encoder and the PF loop scale are free of dust or foreign materials.
  2. Perform the Encoder check by the "1.4.6.1 Self Testing Menu (SELF TESTING)" *(p.106)*.
  3. Make sure that the PF Timing Belt is normal and its tension is appropriate.
  4. Make sure that the Grid Roller rotates smoothly without any abnormal load.
  5. Make sure that the PF Motor is not shorted out.
     If it does, replace the C594 Main Board together with the PF Motor.
  6. Make sure that the harnesses are connected correctly and not broken.
- Remedy
  1. Clean dirt or paper dust on the Loop Scale and check if it is damaged.
  2. Execute the PF Timing Belt Tension Adjustment *(p.307)*.
  3. Replace the PF Encoder Sensor *(p.258)*.
  4. Replace the PF MOTOR ASSY. *(p.255)*.
  5. Replace the BOARD ASSY., MAIN *(p.232)*.

SERVICE CALL 00010004

- Description
  CR Encoder check error
- Explanation
  The printer causes this error and stops operation if it cannot detect the encoder pulse signals at intervals of the specified time during the power-on initialization operation or while the CR Motor is driving.
- Possible Causes
  - CR Encoder FFC is disconnected.
  - The CR Motor connector is disconnected.
  - The FFC of the encoder on the CR side is broken.
  - The wiring of the A and B phases are wrong (opposite)
  - The wiring of the CR Motor is wrong (opposite)
  - The CR Motor shorted out.
  - The fuse for the motor driver is blown. (on the Main Board)
- Check Point
  1. Make sure that the Timing Fence is securely attached on the CR Encoder.
  2. Make sure that the CR Encoder and the Timing Fence are free of dust or foreign materials.
  3. Perform the Encoder check by the "1.4.6.1 Self Testing Menu (SELF TESTING)" *(p.106)*.
  4. Make sure that the CR Timing Belt is normal and its tension is appropriate.
  5. Make sure that the Carriage moves smoothly without any abnormal load.
  6. Make sure that the CR Motor is not shorted out.
     If it does, replace the C594 Main Board together with the CR Motor.
  7. Make sure that the harnesses are connected correctly and not broken.
- Remedy
  1. Reattach the Timing Fence for detecting the encoder securely and correctly.
  2. Clean dirt or paper dust on the Timing Fence and check if it is damaged.
  3. Reconnect the CR Encoder FFC or the CR Motor connector securely.
  4. Execute the CR Timing Belt Tension Adjustment *(p.306)*.
  5. Replace the CR Encoder Sensor *(p.246)*.
  6. Replace the CR MOTOR ASSY. *(p.243)*.
  7. Replace the BOARD ASSY., MAIN *(p.232)*.

SERVICE CALL 00010005

- Description
  CR Motor is out of step.
- Explanation
  The printer causes this error and stops operation if it cannot detect the specified-length encoder pulse signals within a fixed time period or when abnormally long or short pulse signals are detected while the CR Motor is rotating.
- Possible Causes
  - The connector of the Cutter Solenoid is disconnected.
  - The fuse for the Solenoid is blown. (on the Main Board)
  - CR Motor failure
  - The CR Motor driver is damage. (42 V is shorted)
  - The temperature fuse of the Cutter Solenoid is blown (the Cutter Solenoid does not work and the Carriage cannot be unlocked.)
- Check Point
  1. Make sure that the Timing Fence is securely attached on the CR Encoder.
  2. Make sure that the CR Encoder and the Timing Fence are free of dust or foreign materials.
  3. Perform the Encoder check by the "1.4.6.1 Self Testing Menu (SELF TESTING)" *(p.106)*.
  4. Make sure that the CR Timing Belt is normal and its tension is appropriate.
  5. Perform the CR HP Sensor check by the "1.4.6.1 Self Testing Menu (SELF TESTING)" *(p.106)*.
  6. Make sure that the Carriage moves smoothly without any abnormal load.
  7. Make sure that the CR Motor is not shorted out.
     If it does, replace the C594 Main Board together with the PF Motor.
  8. Make sure that the harnesses are connected correctly and not broken.
- Remedy
  1. Reattach the Timing Fence for detecting the encoder securely and correctly.
  2. Clean dirt or paper dust on the Timing Fence and check if it is damaged.
  3. Reconnect the Cutter Solenoid connector securely and correctly.
  4. Execute the CR Timing Belt Tension Adjustment *(p.306)*.
  5. Replace the CR Encoder Sensor *(p.246)*.
  6. Replace the CR MOTOR ASSY. *(p.243)*.
  7. Replace the CUTTER SOLENOID ASSY. *(p.248)*.
  8. Replace the BOARD ASSY., MAIN *(p.232)*.

SERVICE CALL 00010007

- Description
  The CR Motor out of position time-out error
- Explanation
  The printer causes this error and stops operation if it detects that the Carriage could not be moved to the target position within a fixed time period while the CR Motor stopping operation is performed.
- Possible Causes
  The Carriage movement cannot be finished due to the remaining pulses smaller than those generated by the motor out-of-step state.
- Check Point
  1. Make sure that the Timing Fence is securely attached on the CR Encoder.
  2. Make sure that the CR Encoder and the Timing Fence are free of dust or foreign materials.
  3. Perform the Encoder check by the "1.4.6.1 Self Testing Menu (SELF TESTING)" *(p.106)*.
  4. Make sure that the CR Timing Belt is normal and its tension is appropriate.
  5. Make sure that the Carriage moves smoothly without any abnormal load.
  6. Make sure that the CR Motor is not shorted out.
     If it does, replace the C594 Main Board together with the PF Motor.
  7. Make sure that the harnesses are connected correctly and not broken.
- Remedy
  1. Reattach the Timing Fence for detecting the encoder securely and correctly.
  2. Clean dirt or paper dust on the Timing Fence and check if it is damaged.
  3. Execute the CR Timing Belt Tension Adjustment *(p.306)*.
  4. Replace the CR Encoder Sensor *(p.246)*.
  5. Replace the CR MOTOR ASSY. *(p.243)*.
  6. Replace the BOARD ASSY., MAIN *(p.232)*.

SERVICE CALL 00010008

- Description
  Servo interrupt watchdog time-out error
- Explanation
  The printer causes this error and stops operation if it detects a watchdog time-out on the DC motor drive circuit (CPU or ASIC) while the CR or PF Motor is driving.
- Remedy
  CPU or ASIC failure can be considered as the cause of the error, replace the Main Board Assy. Replace the BOARD ASSY., MAIN *(p.232)*.

SERVICE CALL 00010009

- Description
  System interrupt watchdog time-out error
- Explanation
  The printer causes this error and stops operation if it detects an out-of-control state or cache failure in the CPU or ASIC while the C594 Main Board is processing a print data.
- Remedy
  CPU or ASIC failure can be considered as the cause of the error, replace the Main Board Assy. Replace the BOARD ASSY., MAIN *(p.232)*.

SERVICE CALL 0001000A

- Description
  Carriage home position detection error
- Explanation
  The printer causes this error and stops operation if it cannot detect the Carriage home position or cannot detect it within a fixed time period during the power-on initialization operation or while performing home position detecting operation during printing.
- Check Point
  1. Make sure that the CR HP Sensor is free of dust or foreign materials.
  2. Perform the CR HP Sensor check by the "1.4.6.1 Self Testing Menu (SELF TESTING)" *(p.106)*.
- Remedy
  1. Clean dirt or foreign materials on the CR HP Sensor and check if it is damaged.
  2. Replace the CR HP Sensor *(p.244)*.
  3. Replace the BOARD ASSY., MAIN *(p.232)*.

SERVICE CALL 0001000C

- Description
  PG home position detection error
- Explanation
  The printer causes this error and stops operation if it cannot detect the PG home position during the power-on initialization operation or while performing platen gap changing operation after paper is set.
- Possible Causes
  - The PG HP Sensor connector is disconnected.
  - The Pump Motor connector is disconnected.
  - The Pump Motor harness is broken.
  - PG HP Sensor failure
  - Pump Motor failure
  - The PG drive gears are damaged.
  - The fuse for the motor driver is blown. (on the Main Board)
- Check Point
  1. Make sure that the PG HP Sensor and the PG drive gears are free of dust or foreign materials.
  2. Measure the resistance value of the Pump Motor. (7.0 ± 10%[Ω])
     If the motor is shorted out, replace the C594 Main Board together with the motor.
  3. Make sure that the harnesses are connected correctly and not broken.
  4. Make sure that there is no obstacle in the gear train made up of the Pump Motor pinion gear, PG drive gear and etc.
- Remedy
  1. Reconnect the PG HP Sensor connector or the Pump Motor connector securely.
  2. Replace the PG HP Sensor *(p.245)*.
  3. Replace the PUMP CAP ASSY. *(p.284)*.

SERVICE CALL 00010014

- Description
  Failure of pressurizing
- Explanation
  The printer causes this error and stops operation if it detects an abnormal condition of the Pressure Sensor (air leak from the pressurizing mechanism) during the power-on initialization operation or while performing ink supply operation.
- Possible Causes
  - Pressure Motor failure
  - The connector of the Pressure Motor, Regulator Solenoid or Pressure Sensor is disconnected.
  - The harness of the Pressure Motor, Regulator Solenoid or Pressure Sensor is broken.
  - Regulator Solenoid failure (does not become ON)
  - Pressure Sensor failure
  - The Pressure Tube is disconnected.
  - The fuse for the Solenoid or the motor driver is blown.
    (on the Main Board)
- Check Point
  1. Measure the resistance value of the Pressure Motor. (7.0 ± 10%[Ω])
     If the motor is shorted out, replace the C594 Main Board together with the motor.
  2. Make sure that the harnesses are connected correctly and not broken.
- Remedy
  1. Reconnect the connectors of the Pressure Motor, Regulator Solenoid or Pressure Sensor securely.
  2. Connect the Pressure Tube.
  3. Replace the PUMP ASSY., SUPPLY *(p.291)*.
  4. Replace the BOARD ASSY., MAIN *(p.232)*.

SERVICE CALL 0001001B

- Description
  Head driver (TG) temperature error
- Explanation
  The printer causes this error and stops operation if it detects an abnormal internal temperature of the printhead by the thermistor in the head while performing printing operation without firing ink from the nozzles.
- Possible Causes
  - The printhead internal temperature rises because of a printing operation without firing ink.
  - A breakdown of the printhead
  - Poor contact, short or disconnection of the tape electric wires
  - Main Board failure. (A/D of the CPU is damaged)
- Remedy
  1. Check if the printer can recover from the error by turning it OFF and back ON.
  2. Replace the PRINT HEAD *(p.267)*.
  3. Replace the BOARD ASSY., MAIN *(p.232)*.

SERVICE CALL 0001001D

- Description
  CR servo parameter error
- Explanation
  The printer causes this error and stops operation when it detects that a voltage beyond the prescribed range is output to the CR Motor.
- Check Point
  1. Make sure that the CR Encoder and the Timing Fence are free of dust or foreign materials.
  2. Perform the Encoder check by the "1.4.6.1 Self Testing Menu (SELF TESTING)" *(p.106)*.
  3. Make sure that the CR Timing Belt is normal and its tension is appropriate.
  4. Make sure that the Carriage moves smoothly without any abnormal load.
  5. Make sure that the CR Motor is not shorted out.
     If the motor is shorted out, replace the C594 Main Board together with the motor.
  6. Make sure that the harnesses are connected correctly and not broken.
- Remedy
  1. Clean dirt or paper dust on the Timing Fence and check if it is damaged.
  2. Execute the CR Timing Belt Tension Adjustment *(p.306)*.
  3. Replace the CR Encoder Sensor *(p.246)*.
  4. Replace the CR MOTOR ASSY. *(p.243)*.
  5. Replace the BOARD ASSY., MAIN *(p.232)*.

SERVICE CALL 0001001E

- Description
  PF servo parameter error
- Explanation
  The printer causes this error and stops operation when it detects that a voltage beyond the prescribed range is output to the PF Motor.
- Check Point
  1. Make sure that the PF Encoder and the PF loop scale are free of dust or foreign materials.
  2. Perform the Encoder check by the "1.4.6.1 Self Testing Menu (SELF TESTING)" *(p.106)*.
  3. Make sure that the PF Timing Belt is normal and its tension is appropriate.
  4. Make sure that the Grid Roller rotates smoothly without any abnormal load.
  5. Make sure that the PF Motor is not shorted out.
     If the motor is shorted out, replace the C594 Main Board together with the motor.
  6. Make sure that the harnesses are connected correctly and not broken.
- Remedy
  1. Clean dirt or paper dust on the Loop Scale and check if it is damaged.
  2. Execute the PF Timing Belt Tension Adjustment *(p.307)*.
  3. Replace the PF Encoder Sensor *(p.258)*.
  4. Replace the PF MOTOR ASSY. *(p.255)*.
  5. Replace the BOARD ASSY., MAIN *(p.232)*.

SERVICE CALL 00010020

- Description
  CSIC reading/writing error
- Explanation
  The printer causes this error and stops operation if it cannot load the information from the CSIC or write new information on the CSIC while running a power-ON/OFF sequence or opening/closing the I/C Cover, or after finishing to print one page.
- Remedy
  1. Reconnect the CSIC FFC.
  2. The memory chip on the ink cartridge is defective. (replace the ink cartridge)
  3. Poor contact with the memory chip.
     - Replace the HOLDER ASSY., IC, RIGHT *(p.275)*.
     - Replace the HOLDER ASSY., IC, LEFT *(p.279)*.
  4. Replace the BOARD ASSY., SUB; B *(p.238)*.,
     Replace the BOARD ASSY., SUB; C *(p.239)*.
  5. Replace the BOARD ASSY., MAIN *(p.232)*.

SERVICE CALL 00010023

- Description
  RTC analyzing error
- Explanation
  The printer causes this error and stops operation when it detects that the absolute date and time stored on the NVRAM is incorrect.
- Remedy
  1. Start up the printer in the Serviceman mode, and correct the date and time setting using the "RTC & USB ID & IEEE1394 ID" Basic Adjustment menu provided in the Adjustment Program.
  2. Remove and reinstall the lithium battery.
  3. Replace the lithium battery. Be sure to perform the RTC setting.
  4. Replace the BOARD ASSY., MAIN *(p.232)*.

SERVICE CALL 00010026

- Description
  RTC communication error
- Explanation
  The printer causes this error and stops operation when it detects that the RTC circuit on the C594 Main Board malfunctions (operates in test mode).
- Remedy
  1. Turns the printer OFF and remove the lithium battery. Leave the printer for a few seconds and then reinsert the battery and turn the printer ON.
  2. Repeat Step 1 until the printer stops causing the error at power-on.
  3. Start up the printer in the Serviceman mode, and set the date and time using the "RTC & USB ID & IEEE1394 ID" Basic Adjustment menu provided in the Adjustment Program.

SERVICE CALL 00010027

- Description
  Pressure pump micro air-leak error
- Explanation
  The printer causes the error and stops operation if the Pressure Sensor becomes "LOW" state while performing a inspection of the Pressure Motor by "1.4.6.1 Self Testing Menu (SELF TESTING)" *(p.106)*.
  This error occurs only when the printer is in the SELF TESTING mode. If a micro air leak from the Pressure Motor is suspected because the motor works frequently or constantly, the SELF TESTING function allows you to check it for micro air leak before the printer causes a Service Call 00010014 for leakage of air.
- Possible Causes
  - Micro air leak from the Pressure Motor.
  - The Pressure Tube is disconnected.
  - The pressure inside the pressurizing mechanism dropped within 90 seconds after finishing the last pressurizing operation.
- Remedy
  1. Connect the Pressure Tube.
  2. Replace the PUMP ASSY., SUPPLY *(p.291)*.

SERVICE CALL 00010028

- Description
  Head error
- Explanation
  The printer causes this error and stops operation when it detects an undefined NMI in the CPU or the printhead is damaged.
- Remedy
  Replace the PRINT HEAD *(p.267)*.

SERVICE CALL 0001002A

- Description
  CR ASIC ECU error
- Possible Causes
  - Malfunction of the firmware (invalid rewriting of the register)
  - The Main Board is damaged.
- Remedy
  1. Installing Firmware *(p.371)*
  2. Replace the BOARD ASSY., MAIN *(p.232)*.

SERVICE CALL 0001002D

- Description
  The Cleaning Unit reached its end of life.
- Possible Causes
  The pump counter reached the prescribed upper limit (182,000P).
- Remedy
  Replace the Cleaning Unit and reset the life counter of the unit using the Adjustment Program.

SERVICE CALL 00010035

- Description
  Pump phase detection error
- Possible Causes
  A position of the pump cannot be detected after the Pump Motor rotates the prescribed number of times, or the Pump Phase Sensor is faulty. Or the fuse for the motor driver power is blown (on the Main Board).
- Remedy
  Check if the printer can recover from the error by turning it OFF and back ON. If the error occurs again, replace the Pump Cap Assy. or replace the Main Board Assy.
  - Replace the PUMP CAP ASSY. *(p.284).*
  - Replace the BOARD ASSY., MAIN *(p.232).*

SERVICE CALL 00010036

- Description
  Type-B board installation error
- Possible Causes
  A Type-B board lower than level 2 is installed.
- Remedy
  Remove the installed Type-B board.

SERVICE CALL 00010037

- Description
  Head thermistor error
- Possible Causes
  - The head thermistor is faulty.
  - The temperature of the thermistor is lower than minus 20 degrees C or higher than 100 degrees C.
  - The Head FFC is disconnected, or its contact is poor.
- Remedy
  1. Check the connection status of the Head FFC and correct it if necessary.
  2. Replace the PRINT HEAD *(p.267).*

SERVICE CALL 00010038

- Description
  Transistor thermistor error
- Possible Causes
  - The transistor thermistor is faulty.
  - The temperature of the thermistor is lower than minus 20 degrees C or higher than 100 degrees C.
- Remedy
  Replace the BOARD ASSY., MAIN *(p.232).*

SERVICE CALL 0001003E

- Description
  Pressure Sensor failure
- Possible Causes
  - The Pressure Sensor is ON when an ink pressurizing operation is not performed. (disconnection of the Pressure Sensor connector, malfunction of the Pressure Sensor, or Main Board failure)
  - The inside pressure cannot be reduced to the same level as atmospheric pressure. (valve failure, Regulator Solenoid failure, Pressure Tube failure, or Main Board failure)
- Remedy
  1. Reconnect the Pressure Sensor connector securely.
  2. Connect the Pressure Tube.
  3. Replace the PUMP ASSY., SUPPLY *(p.291).*
  4. Replace the BOARD ASSY., MAIN *(p.232).*

SERVICE CALL 0001003F

- Description
  The Pressure Motor reached its end of life.
- Possible Causes
  The cumulative number of steps of the Pressure Motor reached the prescribed upper limit.
- Remedy
  Replace the PUMP ASSY., SUPPLY *(p.291)*., and reset the life counter of the Pressure Pump Unit using the Adjustment Program.

SERVICE CALL 00010040

- Description
  Printing position error
- Possible Causes
  - Exact detection of printing positions is impossible due to dirt or scratches on the Timing Fence or the CR Encoder.
  - Malfunction of the program
- Remedy
  1. Replace the SCALE, CR *(p.251)*.
  2. Replace the CR Encoder Sensor *(p.246)*.
  3. Execute the CR Encoder Sensor Adjustment *(p.308)*.
  4. Installing Firmware *(p.371)*

SERVICE CALL 00020000

- Description
  NVRAM error
- Explanation
  The printer causes this error and stops operation when it detects that parameters stored on the NVRAM are corrupted.
- Possible Causes
  NVRAM erasing or writing error (every 2-byte is checked)
- Remedy
  Replace the BOARD ASSY., MAIN *(p.232)*.

SERVICE CALL 00020002

- Description
  SDRAM error
- Explanation
  The printer causes this error and stops operation when it detects a bit error by the SDRAM memory check performed during the power-on sequence.
- Possible Causes
  - SDRAM reading/writing error
  - SDRAM failure
  - The address/data bus on the Main Board is broken or its contact is poor.
- Remedy
  Replace the BOARD ASSY., MAIN *(p.232)*.

SERVICE CALL 00020003

- Description
  Boot program sum error
- Explanation
  The printer causes this error and stops operation when it detects that the boot program of the firmware is corrupted. This error occurs only when turning the power ON.
- Possible Causes
  - Failed to install the program.
  - Flash ROM failure
  - SDRAM failure
  - The address/data bus on the Main Board is broken or its contact is poor.
- Remedy
  1. Installing Firmware *(p.371)*
  2. Replace the BOARD ASSY., MAIN *(p.232).*

SERVICE CALL 0002000A

- Description
  Program load error
- Explanation
  A sum check error on the program area of the RAM
- Possible Causes
  - Malfunction of the program
  - SDRAM failure
  - The address/data bus on the Main Board is broken or its contact is poor.
- Remedy
  1. Installing Firmware *(p.371)*
  2. Replace the BOARD ASSY., MAIN *(p.232).*

SERVICE CALL 0002000B

- Description
  The internal memory is insufficient.
- Explanation
  This error occurs when the cache area is judged as insufficient. The cache insufficient condition is likely to be caused by using the work area of the memory with unmatched interface mode settings or invalid commands. The printer stops operation when the error occurs.
- Possible Causes
  Malfunction of the program
- Remedy
  1. Check the interface mode setting
  2. Installing Firmware *(p.371)*
  3. Replace the BOARD ASSY., MAIN *(p.232).*

SERVICE CALL 0DXXXXXX

- Description
  An error code for debugging
- Possible Causes
  - Board failure
  - SDRAM failure
  - Cold soldering of the Flash ROM, ASIC, or CPU.
  - Malfunction of the program
  - Failed to generate commands for the printer
- Remedy
  1. Installing Firmware *(p.371)*
  2. Replace the BOARD ASSY., MAIN *(p.232).*

SERVICE CALL 0EXXXXXX

- Description
  A time-lag of the RTC timer
- Explanation
  This error occurs when the printer failed to communicate with the RTC chip on the Main Board.
  - 0Exxyyzz:
    xx = Location where a compare error occurred
    (00 = LTMR1, 01 = LTMR0, 02 = MIN counter)
    yy = Setting value (writing value)
    zz = Setting result (a value read when comparing)
- Remedy
  Start up the printer in the Serviceman mode, and set the date and time setting using the "RTC & USB ID & IEEE1394 ID" Basic Adjustment menu provided in the Adjustment Program.

SERVICE CALL 100000E0

- Description
  CPU address error (misalignment of loading)
- Possible Causes
  - Board failure
  - CPU cold soldering
  - Malfunction of the program, Failed to generate commands for the printer
- Remedy
  1. Installing Firmware *(p.371)*
  2. Replace the BOARD ASSY., MAIN *(p.232).*

SERVICE CALL 10000100

- Description
  CPU address error (misalignment of storing)
- Possible Causes
  - Board failure
  - CPU cold soldering
  - Malfunction of the program, Failed to generate commands for the printer
- Remedy
  1. Installing Firmware *(p.371)*
  2. Replace the BOARD ASSY., MAIN *(p.232).*

SERVICE CALL 10000180

- Description
  CPU reserved command code exception error
- Possible Causes
  - Board failure
  - CPU cold soldering
  - Malfunction of the program, Failed to generate commands for the printer
- Remedy
  1. Installing Firmware *(p.371)*
  2. Replace the BOARD ASSY., MAIN *(p.232).*

SERVICE CALL 100001A0

- Description
  CPU slot undefined command exception error
- Possible Causes
  - CPU cold soldering
  - Malfunction of the program, Failed to generate commands for the printer
- Remedy
  1. Installing Firmware *(p.371)*
  2. Replace the BOARD ASSY., MAIN *(p.232).*

SERVICE CALL 100001C0

- Description
  The AC power is shut off.
- Possible Causes
  - A power failure
  - The power code is disconnected.
  - Power Supply Board failure
  - Main Board failure
  - The CPU detected NMI with “1” indicated for the NMIINO of the ASIC.
- Remedy
  1. Turn the printer OFF to reconnect the power code and turn it ON.
  2. Replace the P/S BOARD ASSY. *(p.234).*
  3. Replace the BOARD ASSY., MAIN *(p.232).*

SERVICE CALL 100005C0

- Description
  CPU DMA address error
- Possible Causes
  - Board failure
  - CPU cold soldering
  - Malfunction of the program, Failed to generate commands for the printer
- Remedy
  1. Installing Firmware *(p.371)*
  2. Replace the BOARD ASSY., MAIN *(p.232).*

SERVICE CALL 10000XXX

- Description
  CPU error
- Possible Causes
  - Board failure
  - CPU cold soldering
  - Malfunction of the program, Failed to generate commands for the printer
- Remedy
  1. Installing Firmware *(p.371)*
  2. Replace the BOARD ASSY., MAIN *(p.232).*

3.3 Troubleshooting based on Printed Result

This section describes the major print quality troubles and provides troubleshooting procedure for each of the trouble.

Table 3-4. Print Quality Troubles

Item	Description	Reference Pages
1	Dot missing	p.203
2	Inconsistencies in density, blurring, or unexpected colors	p.204
3	Smudges on the printed side	p.204
4	Smudges on the backs of pages	p.205
5	Horizontal white or black streaks	p.205
6	Vertical bands	p.206
7	Intrusion of air into the Ink Tube	p.206

DOT MISSING

The printer has a function to detect dot missing by the Ink-mark Sensor and run a cleaning automatically, however, if the function is set to disabled or the printer is not used over a long period of time, the nozzles may not fire ink causing severe dot missing symptom due to increased ink viscosity on the nozzle surfaces and inside the nozzles. Follow the procedure below to repair it.

☐ Run a printhead cleaning or perform an initial ink charging operation.

1. Run a power cleaning. If the printer does not return to normal by this, run a cleaning or perform the initial ink charge operation.

Cleaning	How to Run the Cleaning
Power cleaning	Panel setting menu or Maintenance menu: POWER CLEANING
	Adjustment Program: CL4
Cleaning	Maintenance mode: SSCL
	Adjustment Program: SSCL
Initial Ink Charging	Adjustment Program: Initial Ink Charge

2. Printing Nozzle Check Pattern (Test Print Menu) *(p.72)*
   Print a nozzle check pattern. (Panel Setting → TEST PRINT → NOZZLE CHECK)

CHECK POINT

- **Before performing the initial ink charge, be sure to check the available space of the Maintenance Tank by its counter as a large amount of ink will be discharged to the tank for the initial ink charge. Have an another Maintenance Tank as a replacement if necessary.**
- **Also check the remaining amount of ink before the initial ink charging. If the remaining amount is lower than 50%, replace the ink cartridge with a new one to perform the initial ink charge.**

☐ If the dot missing still occurs after running the power cleaning, check the following items.

- When the dot missing appears in all colors.
  - Check if the printhead and the Cap Assy. are kept in absolute contact with one another during ink charging operation.
  - Check if the Cap Assy./Pump tubes are disconnected.
  - Check if the Cleaning Unit has reached its end of life.
  - Check the Cap Assy. for any damage such as damage of the cap rubber.
  - Check the Pump Unit for any damage such as crushing of the tubes.
  - Check if the printhead is defective.
  - Check if the fuse on the Main Board is blown.
  - Check that the Head FFC connector is securely connected.
- When the dot missing appears in particular colors.
  - Check the Head Cleaner for any dirt.
  - Check the junctions of the ink cartridges, Ink Holder, tubes, dampers, and the printhead for any abnormality.
    (Ink may be leaking by loosened fixing nuts, deformed or damaged O-ring.)
  - Check if the printhead is defective.
  - Perform the power cleaning again.

☐ If the trouble still occurs even after performing all the troubleshooting described above, replace the parts listed below and check if it returns the printer to normal.

- PRINT HEAD *(p.267)*
- BOARD ASSY., MAIN *(p.232)*

INCONSISTENCIES IN DENSITY, BLURRING, OR UNEXPECTED COLORS

When a print quality trouble such as inconsistencies in density, blurring images, unexpected colors, or etc. occurs, perform the following items.

1. Carry out the following adjustments.
   1. Nozzle Bi-D Adjustment *(p.321)*
   2. Auto Bi-D Adjustment (P.G. 0.8/1.6) *(p.330)*
   3. Auto Uni-D Adjustment *(p.329)*

   If any abnormality is found by Check Nozzle *(p.362)* and Check Alignment *(p.363)*, go to the next step.
2. If the print quality trouble appears only on a particular type of thick paper, input the paper type in the CUSTOM PAPER in the Panel Setting menu.
   (Make a custom setting for the paper using the menu. Selecting appropriate paper feeding amount, platen gap can avoid the trouble.)
3. When the trouble occurs after replacing the C594 Main Board
   - Load the NVRAM parameters from the previous Main Board. *(p.338)*
4. If the trouble still occurs even after performing the troubleshooting described above, replace the part listed below.
   - PRINT HEAD *(p.267)*

SMUDGES ON THE PRINTED SIDE

When smudges caused by the head or etc. appear on printed side, perform the following items.

1. If the smudges appear on the top or bottom margin of roll paper, expand the margin. (Set the ROLL PAPER MARGIN in the Panel Setting menu to “TOP/BOTTOM 15 mm”.)
   (Narrower margin setting (3 mm) for the high-density print job is likely to cause smudges on the margin because the paper deforms due to a lot of ink printed on it and its top or bottom edge sometimes contacts with the printhead.)
2. For thin or soft paper that cannot go through the paper path smoothly, set the PAPER SUCTION in the CUSTOM PAPER in the Panel Setting menu to “-4”.
3. When the smudges appear on a user-defined paper because the printed ink does not dry fast
   Correct the DRYING TIME setting in the CUSTOM PAPER of the Panel Setting menu. The DRYING TIME is a time period from when finishing printing to when starting cutting the paper. (Default is 0 second, and can be selected in 1-second unit up to 10 seconds)
4. When the above troubleshooting does not solve the problem, check the following items.
   - Check if the Pump Unit is damaged.
   - Check if dust, paper dust, or foreign materials that absorbed ink is adhering to the side of the printhead.
5. Change the PG setting to the wider setting.

   NOTE: *This may deteriorate the print quality.*

SMUDGES ON THE BACKS OF PAGES

When ink smudges appear on the backs of pages, perform the following items.

1. Check if the paper is completely flat and free of folding or curl. Change the paper with new one if any abnormality is found.
2. Check the paper path for ink smudges, and clean the path if ink stain or smudges are found.
   - Surface of the PF Roller
   - Surface of the Front Paper Eject Guide
   - Surface of the Rear Paper Guide (includes the switching knob)
   - Surface of the Paper Eject Roller

CAUTION

If the PAPER SIZE CHECK and the PAPER SKEW CHECK in the Panel Setting menu are set to OFF, and the user-defined paper size is incorrect, printing on the platen surface may occur.

3. Check the Ink Pads for borderless printing for any abnormality and correct them if necessary.
   - Deformation
   - Not securely attached
   - Ink is accumulating on/around them

CHECK POINT

Be sure to clean the platen and sub platen if they have smudges.

HORIZONTAL WHITE OR BLACK STREAKS

When white or black streaks appear on the printed images in the Carriage movement direction, check the following items.

1. Printing Nozzle Check Pattern (Test Print Menu) *(p.72)*
   Execute the NOZZLE CHECK in the Panel Setting menu to check if dot missing exist or not.

   If dot missing is found, run a head cleaning or perform an initial ink charging as necessary following the procedure below.
   - Execute "Cleaning" *(p.339)* by the Adjustment Program.
   - Execute "Power Cleaning" *(p.94)* in the Panel Setting menu.
   - Execute "Initial Ink Charge" *(p.339)* by the Adjustment Program.
2. Adjustment
   If dot missing is not found, carry out the following adjustments and check the result.
   - Check Alignment *(p.363)*
     If the trouble appear on all colors, perform "Power Cleaning" *(p.94)* or "Initial Ink Charge" *(p.339)*. If misalignment is found in light magenta color, perform the "SSCL" (Super Sonic Cleaning).
   - 980mm Band Feed Adjustment *(p.336)*
   - Print Image *(p.366)*

VERTICAL BANDS

When bands (inconsistencies in density, or partly grainy) appear on the printed images in the paper feeding direction, check the following items.

- Bi-D Adjustment
  Carry out the Bi-D Adjustment using any one of the following tools.
  - HEAD ALIGNMENT in the Panel Setting menu
  - Printer driver
  - Adjustment Program

If the bands still appear even after the adjustment, fine-tune the setting value (plus or minus 0.1 to 0.2 mm) for the THICKNESS NUMBER in the CUSTOM PAPER in the Panel Setting menu.

INTRUSION OF AIR INTO THE INK TUBE

If intrusion of air into the Ink Tubes can be confirmed visually, perform the following cleaning.

Cleaning	How to Run the Cleaning
Power cleaning	Panel setting menu or Maintenance menu POWER CLEANING
	Adjustment Program: CL4

CHAPTER

4

DISASSEMBLY & ASSEMBLY

4.1 Overview

This section describes procedures for disassembling the main components of the product. Unless otherwise specified, disassembled units or components can be reassembled by reversing the disassembly procedure.

CHECK POINT

The disassembly/assembly procedures are provided based on the Wide models; Stylus Pro 9400/9800. The procedures for the Narrow models; Stylus Pro 7400/7800 are given under the heading "CHECK POINT" only when they differ from those of the Wide models.

- ☐ Procedures which, if not strictly observed, could result in personal injury are described under the heading "WARNING".
- ☐ "CAUTION" signals a precaution which, if ignored, could result in damage to equipment.
- ☐ Important tips for procedures are described under the heading "CHECK POINT".
- ☐ If the assembly procedure is different from the reversed disassembly procedure, the correct procedure is described under the heading "REASSEMBLY".
- ☐ Any adjustments required after reassembly of components or parts are described under the heading "ADJUSTMENT REQUIRED". Be sure to perform the specified adjustments with reference to Chapter 5 "ADJUSTMENT".

When you have to remove any parts or components that are not described in this chapter, refer to the exploded diagram in the Appendix.

4.1.1 Precautions

Before starting the disassembly or reassembly of the product, read the following precautions given under the headings "WARNING" and "CAUTION".

WARNING

- **For safety, do not disable the cover sensor switch function that stops the CR and PF Motor drive while the FRONT COVER ASSY. is open.**
- **This printer is equipped with a lithium battery. When handling the lithium battery, the following precautions should be followed.**
  - **When replacing the battery, replace only with a specified type of battery. Using a different type of battery may cause excess heat or explosion.**
  - **Dispose of used batteries according to manufacture's instructions and local regulations. Contact your local government agency for information about battery disposal and recycling.**
  - **When disposing of the battery, be sure to securely cover the (+) end of it with tape to prevent combustion or explosion.**
  - **Do not recharge the battery.**
  - **Do not use the battery if it is discolored or damaged, or if any leakage of electrolyte is observed.**
  - **Do not dismantle, solder or heat the battery. Doing so could result in leakage of electrolyte, heat generation, or explosion.**
  - **Do not heat the battery or dispose of it in fire.**
  - **If the electrolyte leaked from the battery contacts with your skin or gets into your eyes, rinse it off with clean water and see a doctor immediately.**
- **The power switch is installed on the secondary side of the power circuit, so power is always supplied unless the power cord is unplugged. Unless otherwise stated, be sure to unplug the power code before disassembling or assembling the printer to prevent electric shock and damage to the circuit.**
- **Always wear gloves for disassembly and reassembly to avoid injury from sharp metal edges.**
- **If ink gets in your eye, flush the eye with fresh water and see a doctor immediately.**
- **Never touch the ink or wasted ink with bare hands. If ink comes into contact with your skin, wash it off with soap and water immediately. If irritation occurs, contact a physician.**

CAUTION

- Provide sufficient work space for disassembling and reassembling.
- Locate the printer on a stable and flat surface.
- Be extremely careful to avoid a personal injury when moving or carrying it as the printer is extremely heavy in weight. When removing/reinstalling the feet from/to the main unit, the work should be done by the number of people indicated below.
  - Stylus Pro 7400/7800: 49 kg (two or more persons are required)
  - Stylus Pro 9400/9800: 90 kg (four or more persons are required)
- The ink-path-related components or parts should be firmly and securely reinstalled on the printer to prevent the ink from leakage.
- Use only recommended tools for disassembly, assembly or adjustment of the printer.
- When air duster is used on the repair and the maintenance work, the use of the air duster products containing the inflammable gas is prohibited.
- Apply lubricants and adhesives as specified.
- Be careful not to soil the printer or the floor with the leaked ink when removing the ink-path-related components or parts. Spread a sheet of paper or cloth on the floor in advance.
- Do not touch electrical circuit boards with bare hands as the elements on the board are so sensitive that they can be easily damaged by static electricity. If you have to handle the boards with bare hands, use static electricity discharge equipment such as anti-static wrist straps.
- When reassembling the printer, make sure to connect the connectors of the electric components or parts correctly and securely. Use extreme care when connecting FFCs (flexible flat cables). Improper connection of the FFCs, such as inserting them diagonally into the connectors, could cause short-circuiting and lead to breakdown of the electric elements on the boards.
- When reassembling the printer, make sure to route the FFCs and other cables as specified in this chapter. Failure to do so may cause an unexpected contact of the cables with sharp metal edges, or lead to lower the noise immunity.

CAUTION

- When the printer has to be operated with the covers removed, take extra care not to get your fingers or clothes caught in moving parts.
- The cutter blade is razor-sharp. Be especially careful when handling the cutter.
- Carbide blade employed for the cutter blade is hard but brittle. Be careful not to hit it against metal parts of the printer as it can be easily damaged.
- When you have to remove any parts or components that are provided as after-service-parts but are not described in this chapter, carefully observe how they are installed and make sure to remember it before removing them.
- When you removed any parts or components that are secured with black acetate tape or two-sided tape, be sure to reinstall and secure them with the tape as exactly the same as they were.

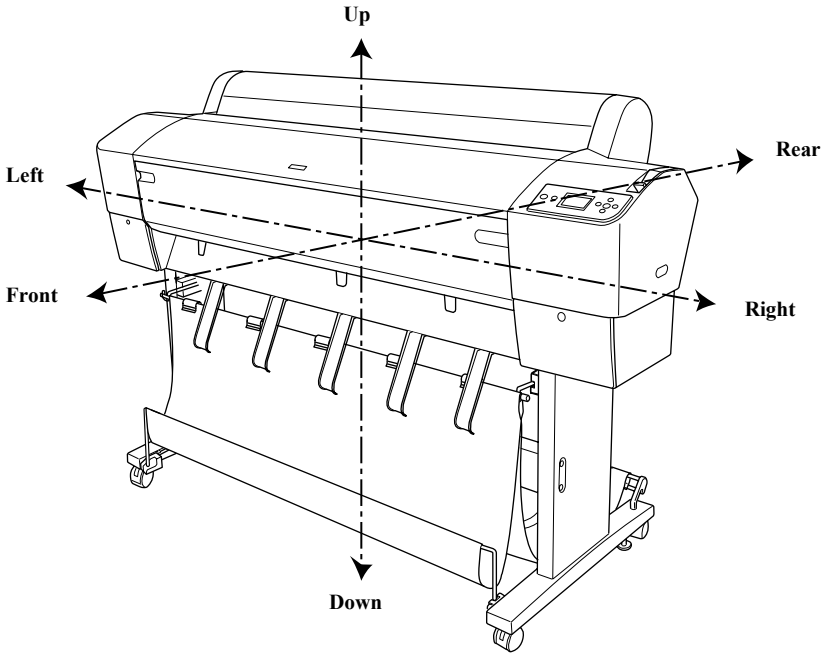

Figure 4-1. Orientation Definition

4.1.2 Recommended Tools

To protect this product from damage, use the tools indicated in the following table.

Table 4-1. Specified Tools

Name	Epson Part Number	Note
Phillips screwdriver, No. 1	Commercially available	---
Phillips screwdriver, No. 2	Commercially available	250 mm or longer shaft length is recommended.
Flat-blade screwdriver	Commercially available	---
Hexagonal Box driver	Commercially available	5mm
Long-nose pliers	Commercially available	---
Nipper	Commercially available	---
Tweezers	Commercially available	---
Hexagonal wrench*1	Supplied with the dedicated stand (Commercially available)	---
Ink cartridges*2	T56xxxx*3	---
Black ink conversion kit	TBD	To replace the black ink
Maintenance tank	C12C890191	---

Note *1: The hexagonal wrench is necessary only when removing the feet from the main unit.

*2: Eight ink cartridges are required for every servicing.

*3: "xxxx" varies depending on the ink cartridge.

4.1.3 Recommended Screws

The following table indicates the screws used in the EPSON Stylus Pro 7400/7800/9400/9800 Printers.

Table 4-2. Recommended Screws

Name	Color	Definition
Protective Screw	Silver	Special Screw
C.B.S.(O) M4x8	Silver	Phillips Bind Head S-tite Screw with Outside Toothed Lock Washers
C.C.P. M3x8	Black	Phillips Cup Head P-tite Screw
C.B.S. M3x8	Silver	Phillips Bind Head S-tite Screw
C.B.P.(P1) M4x12	Silver	Phillips Bind Head P-tite Screw with Plane Washer 1
C.B.P. M4x12	Silver	Phillips Bind Head P-tite Screw
C.F.P. M4x12	Silver	Phillips Flat Head P-tite Screw
C.C.S. M4x8	Silver	Phillips Cup Head S-tite Screw
C.C.S. M3x12	Silver	Phillips Cup Head S-tite Screw
C.B.S. M3x6	Silver	Phillips Bind Head S-tite Screw
C.B.S. M4x6	Silver	Phillips Bind Head S-tite Screw
C.B. M3x6	Silver	Phillips Bind Head Screw
Hex socket screw	Silver	Special Screw
C.T.S. M4x6	Black	Phillips Truss Head S-tite Screw
Roll bearing R screw 14	Silver	Special Screw
C.C.S. M4x10	Silver	Phillips Cup Head S-tite Screw
C.C.S. M3x8	Silver	Phillips Cup Head S-tite Screw
C.C.S. M3x6	Silver	Phillips Cup Head S-tite Screw
C.P.S.(S-P2) M3x8	Silver	Phillips Pan Head S-tite Screw with Spring Lock Washers and Plane Washer 2
C.P.S.(S-P2) M3x14	Silver	Phillips Pan Head S-tite Screw with Spring Lock Washers and Plane Washer 2
C.C. M3x6	Silver	Phillips Cup Head Machine Screw
C.C. M4x45	Silver	Phillips Cup Head Machine Screw
C.P.S.(S-P2) M4x8	Silver	Phillips Pan Head S-tite Screw with Spring Lock Washers and Plane Washer 2

Table 4-2. Recommended Screws

Name	Color	Definition
C.B.P. M3x6	Silver	Phillips Bind Head P-tite Screw
C.P.S.(S-P2) M3x5	Silver	Phillips Pan Head S-tite Screw with Spring Lock Washers and Plane Washer 2
C.P.S.(S-P2) M2.6x6	Silver	Phillips Pan Head S-tite Screw with Spring Lock Washers and Plane Washer 2
C.B.P. M3x8	Silver	Phillips Bind Head P-tite Screw
C.P.P. M2.6x6	Silver	Phillips Pan Head P-tite Screw
C.C.P. M3x6	Silver	Phillips Cup Head P-tite Screw
C.P.P. M1.4x5	Silver	Phillips Pan Head P-tite Screw
C.B.S. M3x10	Silver	Phillips Bind Head S-tite Screw
C.P.S.(S-P2) M3x6	Silver	Phillips Pan Head S-tite Screw with Spring Lock Washers and Plane Washer 2
C.B.P. M2.6x6	Silver	Phillips Bind Head P-tite Screw
CONNECTING SCREW, M7	White	Special Screw
CONNECTING SCREW	Gold	Special Screw

4.2 Disassembly Procedure

CAUTION

- **Disassembling the frame and some components of the printer is prohibited because they are assembled with precise measurements in 1/100 mm unit at the factory. Parts or components allowed to be disassembled/reassembled are listed with there part numbers on "Parts List" in Appendix. If you disassemble and reassemble any one of the prohibited parts or components, which is not listed on the Parts List, the printer could result in serious non-recoverable error that requires repair at the factory.**
- **When servicing on-site, do not disassemble any parts or components that are not described in this chapter.**

The disassembly flowchart is given on the next page.

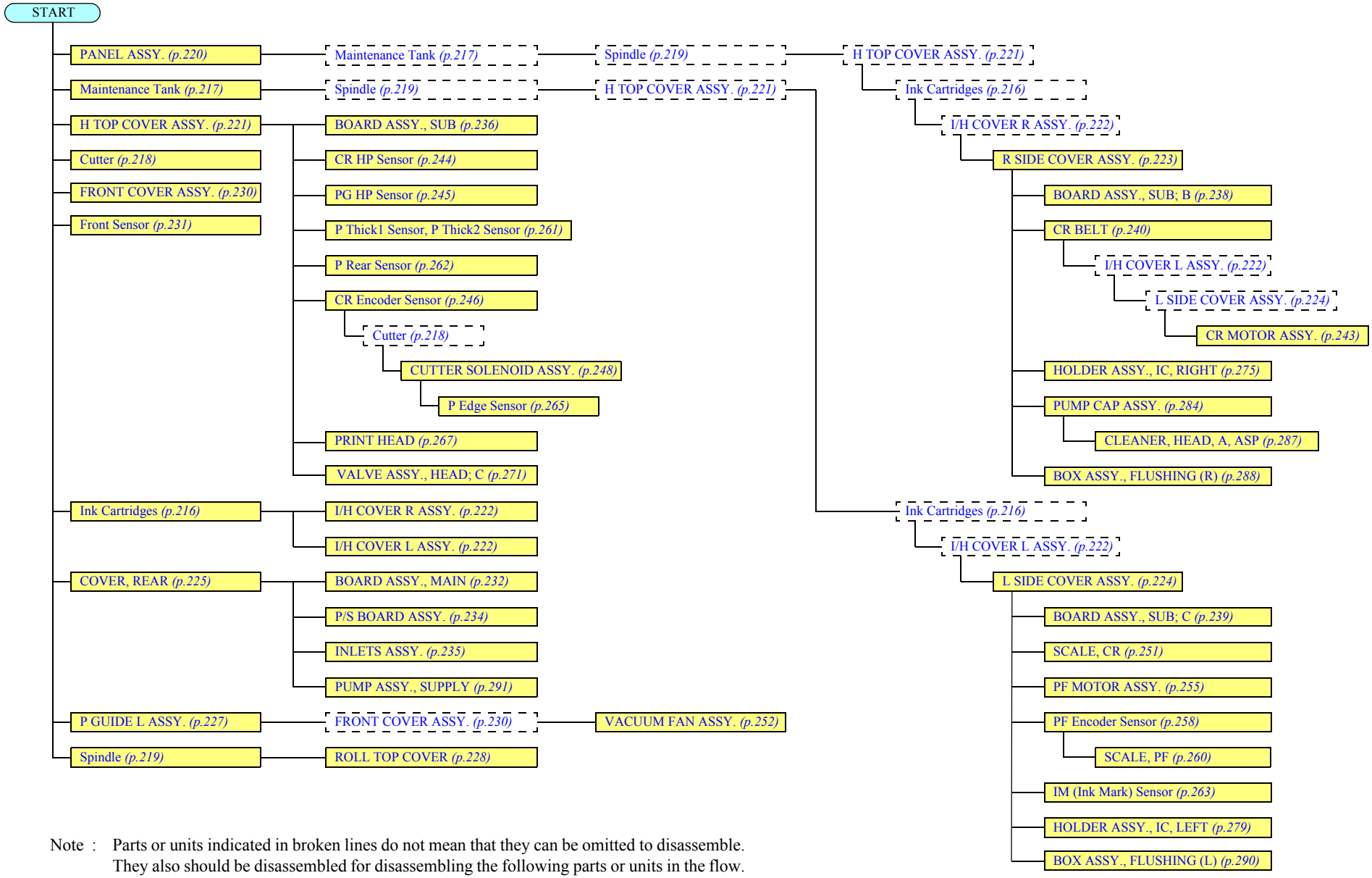

Note : Parts or units indicated in broken lines do not mean that they can be omitted to disassemble. They also should be disassembled for disassembling the following parts or units in the flow.

Figure 4-2. Disassembly Process Flowchart

4.2.1 Basic Operations

4.2.1.1 Protective metal plate

1. Open the FRONT COVER ASSY.
2. Remove the screw that secures the protective metal plate on the left side of the CARRIAGE ASSY. and remove the plate.
   - One protective screw
3. Close the FRONT COVER ASSY.

REASSEMBLY

When the printer should be repacked for transportation, be sure to screw the protective metal plate to the CARRIAGE ASSY. and use protection materials.

CHECK POINT

The disassembly procedures on the following pages are described on the assumption that the protective metal plate has already been removed.

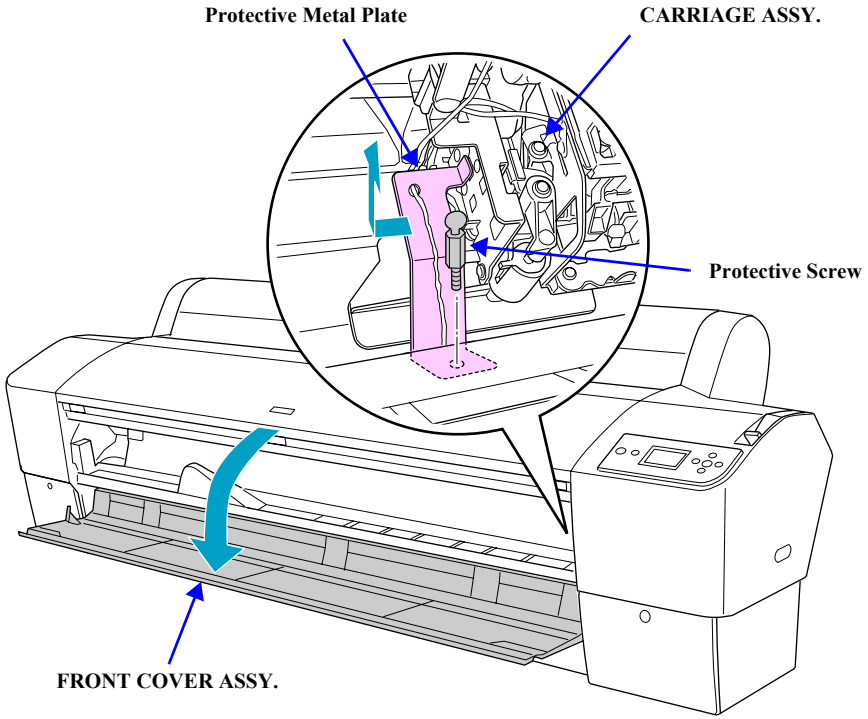

Figure 4-3. Removing the Protective metal plate

4.2.1.2 Unlocking/Locking the CARRIAGE ASSY.

UNLOCKING THE CARRIAGE ASSY.

1. Open the FRONT COVER ASSY.
2. Press the CUTTER CAP and unlock the CARRIAGE ASSY. *See Figure 4-4.*

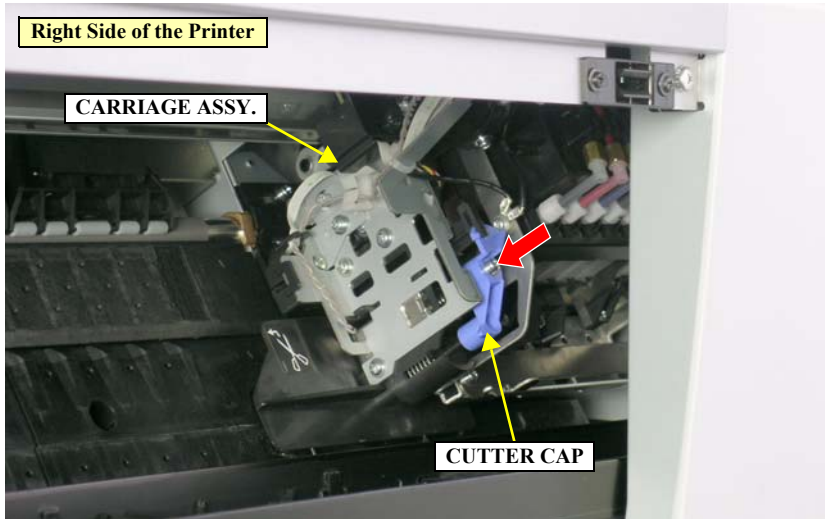

Figure 4-4. Unlocking the CARRIAGE ASSY.

LOCKING THE CARRIAGE ASSY.

1. Move the CARRIAGE ASSY. rightward. The unit is locked when you hear it clicks at its rightmost position. *See Figure 4-5.*

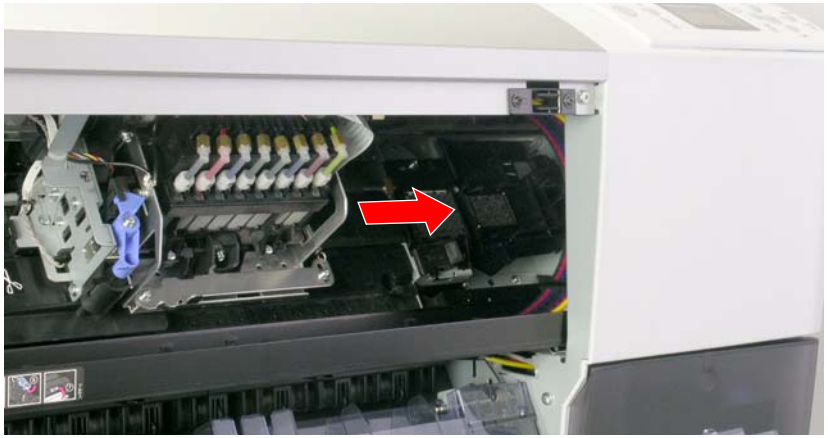

Figure 4-5. Locking the CARRIAGE ASSY.

4.2.2 Consumables

4.2.2.1 Ink Cartridges

1. Open the I/H COVER R and the I/H COVER L. *See Figure 4-7.*
2. Raise the two KNOB, I/C, LOCK LEVER; C593 to unlock the Ink Cartridges. *See Figure 4-7.*

CAUTION

When removing the Ink Cartridges in the next step, the following precautions must be followed.

- **Never touch the IC chips of the Ink Cartridges.Doing so may cause a malfunction of the printer.**
- **Never touch the ink supply port of the Ink Cartridges as ink may leak from there.**

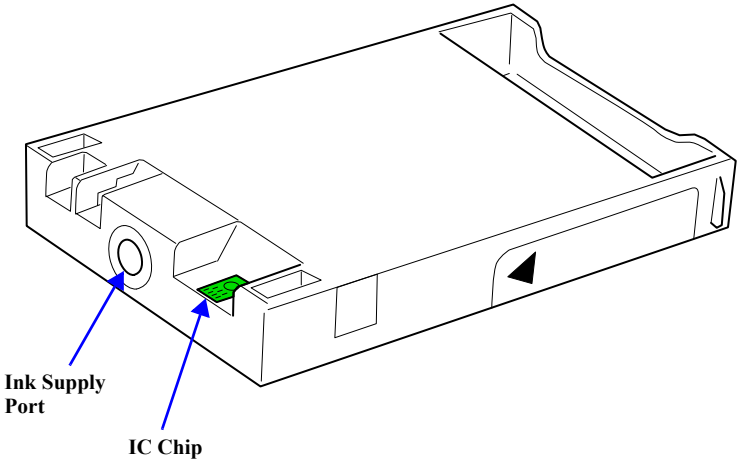

Figure 4-6. Handling the Ink Cartridges

3. Remove the all Ink Cartridges from the left and right Cartridge Slots. *See Figure 4-8.*

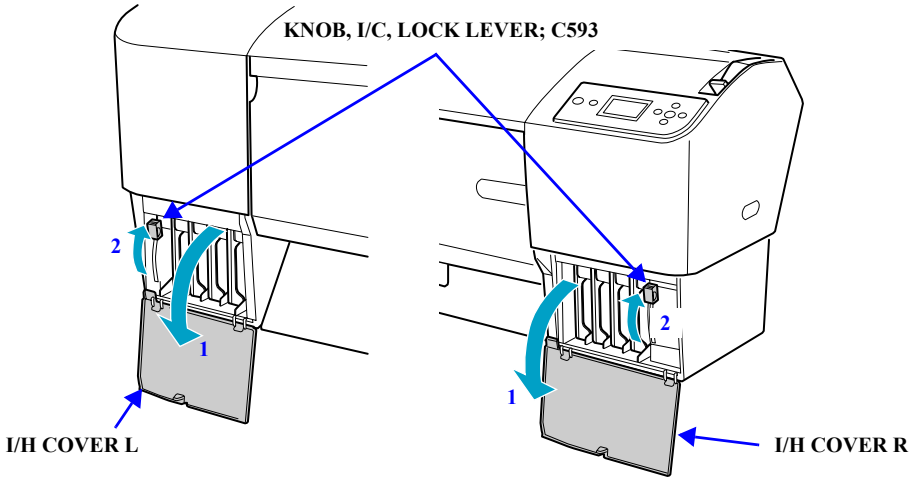

Figure 4-7. Unlocking the Ink Cartridges

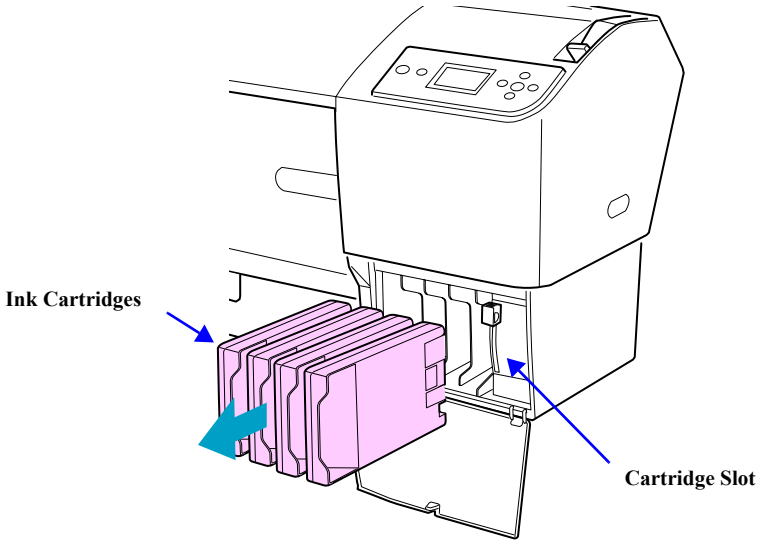

Figure 4-8. Removing the Ink Cartridges

4.2.2.2 Maintenance Tank

CAUTION

When removing the Maintenance Tank in the next step, be sure not to touch the IC chip on the tank. Doing so may cause a malfunction of the printer.

CHECK POINT

The Stylus Pro 9400/9800 have two Maintenance Tanks, and the 7400/7800 have one tank on its right side.

1. Pull out the Maintenance Tank while holding the printer, and remove the tank putting your other hand on it not to tilt it.

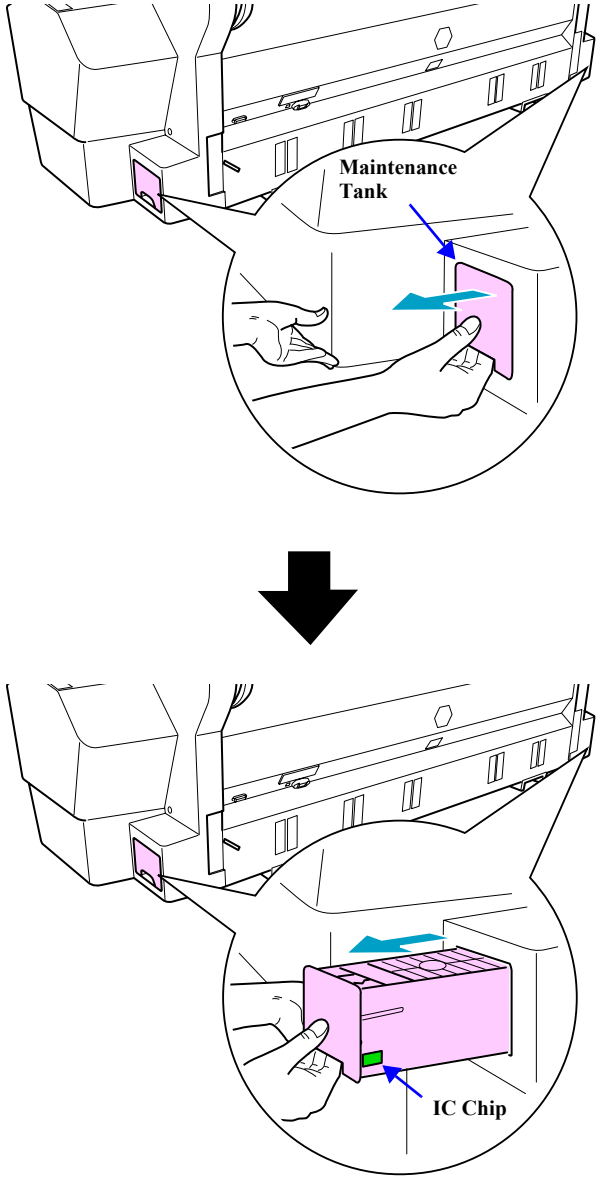

Figure 4-9. Removing the Maintenance Tank

4.2.2.3 Cutter

1. After turning the printer ON, press and hold the Paper Source button ◀ for 3 seconds or more to put the printer into the cutter replacement mode.
2. The CARRIAGE ASSY. will move to the cutter replacement position.
3. Open the FRONT COVER ASSY.

CAUTION

Beware of the following items when performing the next step.

- **Push the boss on the Cutter lightly. Do not push it too much as the blade edge may damage the printer's internal components.**
- **The Cutter may pop up if you push the Cutter too much and release it suddenly as a spring is incorporated into the Cutter. Be careful not to do that.**
- **Be careful not to drop the Cutter or hit it against hard object such as metal parts, or the cutter blade may chip.**

4. Press down the boss on the Cutter lightly and turn the Cutter Cap clockwise. *See Figure 4-10.*
5. Remove the Cutter from the CARRIAGE ASSY. *See Figure 4-11.*

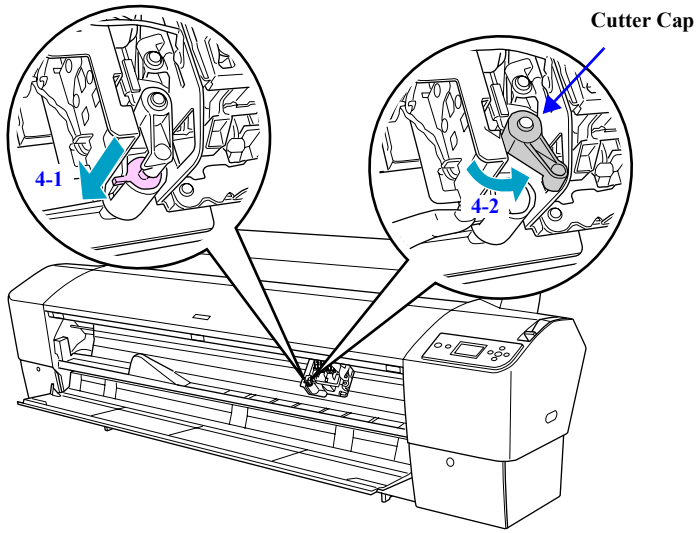

Figure 4-10. Removing the Cutter (1)

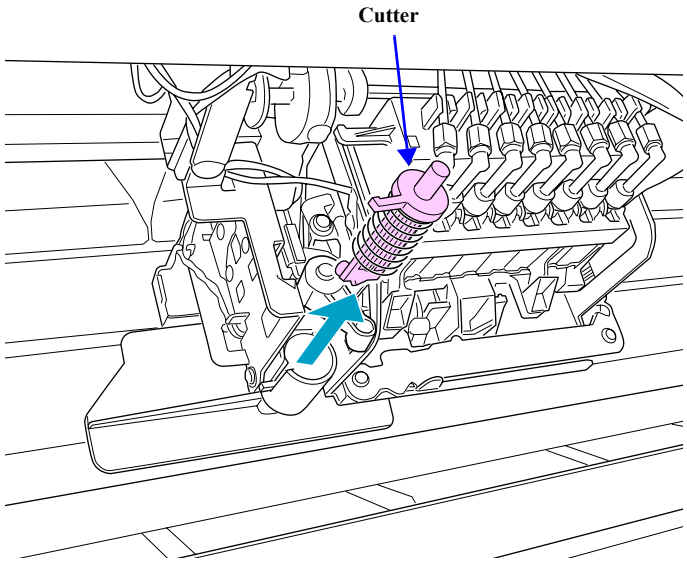

Figure 4-11. Removing the Cutter (2)

4.2.2.4 Spindle

REMOVING THE IM SPINDLE

1. Open the ROLL TOP COVER.
2. Remove the Spindle. *See Figure 4-13.*

DISASSEMBLING THE SPINDLE

1. Remove the Spindle.
2. Remove the Adjustable Paper Stopper (black) from the Spindle together with the Attachment. *See Figure 4-14.*
3. Release the two hooked tabs that secure the Attachment, and remove it from the Adjustable Paper Stopper (black) and the Fixed Paper Stopper (gray). *See Figure 4-14.*

Match the △ mark on the Attachment with the △ mark each on the Adjustable Paper Stopper (black) and the Fixed Paper Stopper (gray).

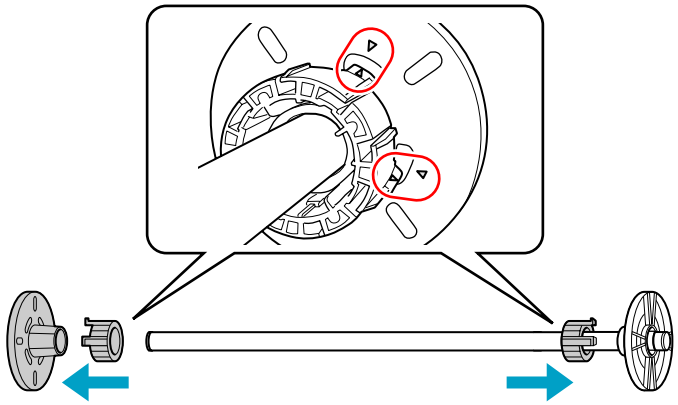

Figure 4-12. Reinstalling the Attachment

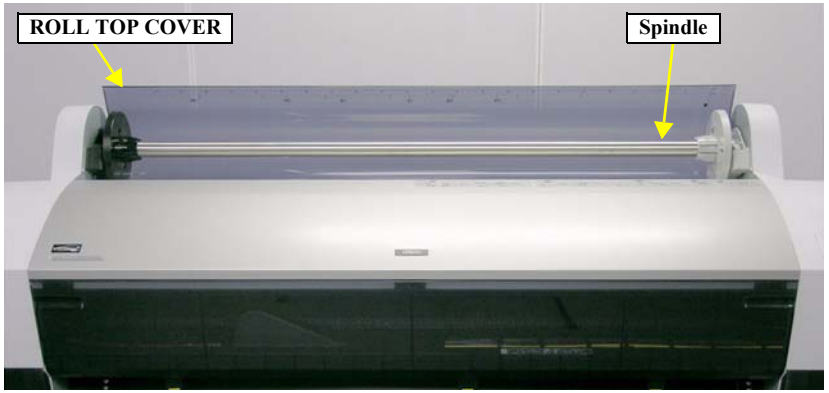

Figure 4-13. Removing the Spindle

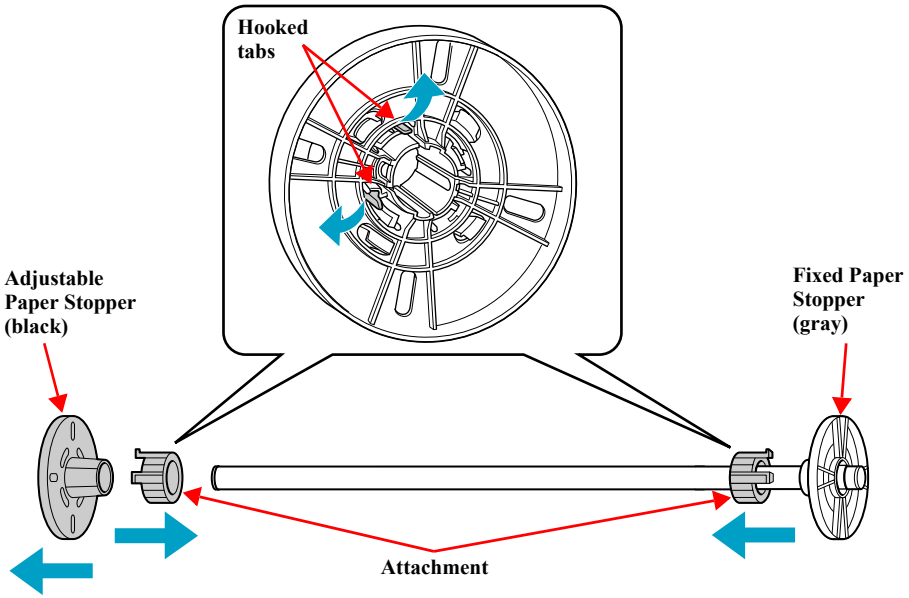

Figure 4-14. Disassembling the Spindle

4.2.3 Removing the Panel Unit and Housing

4.2.3.1 PANEL ASSY.

1. Unlock the CARRIAGE ASSY. and move the unit to the center. *See Section on page 215.*

CAUTION

When performing the next step, be careful not to pull the PANEL ASSY. too much as it is still connected to the printer with the FFC.

2. Release the two hooked tabs that secure the PANEL ASSY. from the inner side, and remove the PANEL ASSY. *See Figure 4-16.*

REASSEMBLY

First attach the two hooked tabs of the PANEL ASSY. to the R SIDE COVER ASSY., and then push the front side edge of the PANEL ASSY. into the R SIDE COVER ASSY.

Figure 4-15. Reinstalling the PANEL ASSY.

3. Disconnect the FFC from the PANEL ASSY. *See Figure 4-17.*

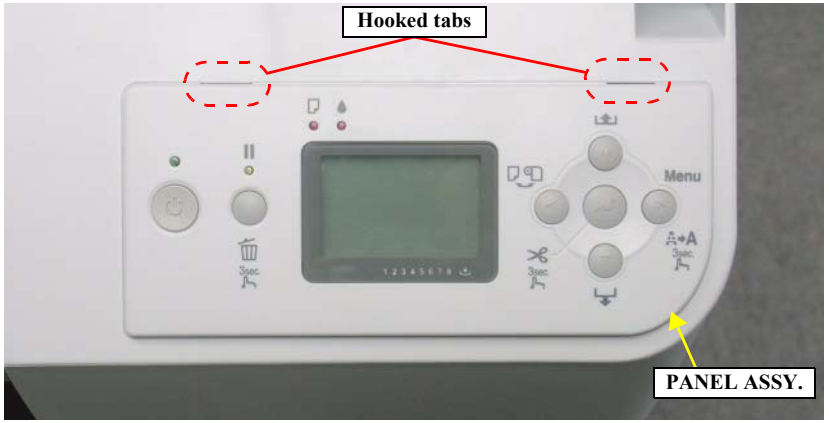

Figure 4-16. Hooked Tabs for Securing the PANEL ASSY.

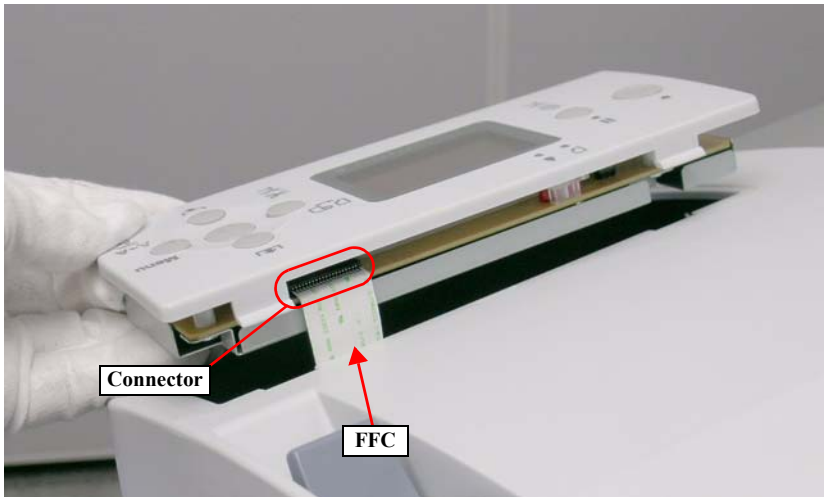

Figure 4-17. Removing the PANEL ASSY.

4.2.3.2 H TOP COVER ASSY.

1. Open the FRONT COVER ASSY.
2. Remove the four screws that secure the H TOP COVER ASSY.
   - Four C.B.S.(O) M4 x 8 screws
3. Slide the H TOP COVER ASSY. toward the front side and then lift it to remove it.

Put the left and right edges of the H TOP COVER ASSY. on the edge each of the L SIDE COVER ASSY. and the R SIDE COVER ASSY.

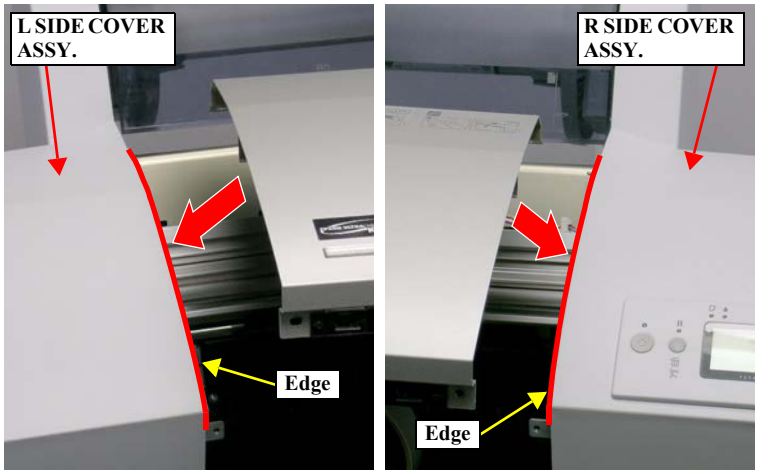

Figure 4-18. Reinstalling the H TOP COVER ASSY.

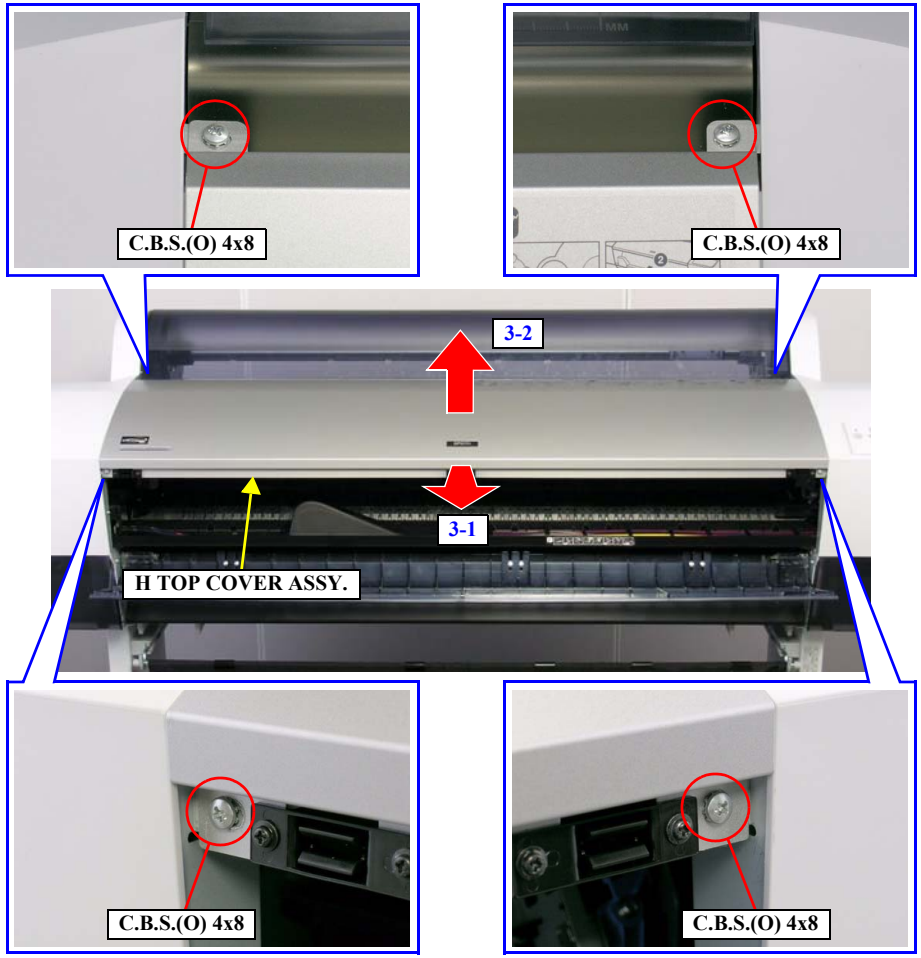

Figure 4-19. Removing the H TOP COVER ASSY.

4.2.3.3 I/H COVER R, I/H COVER L

I/H COVER R ASSY.

1. Remove the Ink Cartridges. *See Section 4.2.2.1 on page 216.*
2. Lower the KNOB, I/C, LOCK LEVER; C593 to the position shown in the figure. *See Figure 4-20.*
3. Remove the screw that secures the KNOB, I/C, LOCK LEVER; C593 and remove it. *See Figure 4-20.*
   - One C.C.P. M3 x 8 screw (black)
4. Remove the two screws that secure the I/H COVER R ASSY. *See Figure 4-20.*
   - Two C.B.S. M3 x 8 screws
5. Release the two tabs that secure the I/H COVER R ASSY. and remove it. *See Figure 4-20.*

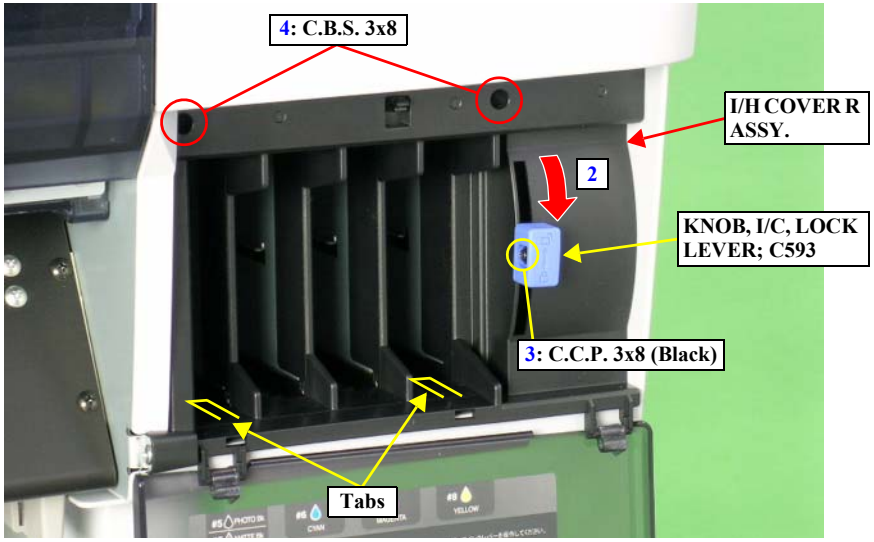

Figure 4-20. Removing the I/H COVER R ASSY.

I/H COVER L ASSY.

1. Remove the Ink Cartridges. *See Section 4.2.2.1 on page 216.*
2. Lower the KNOB, I/C, LOCK LEVER; C593 to the position shown in the figure. *See Figure 4-21.*
3. Remove the screw that secures the KNOB, I/C, LOCK LEVER; C593 and remove it. *See Figure 4-21.*
   - One C.C.P. M3 x 8 screw (black)
4. Remove the two screws that secure the I/H COVER L ASSY. *See Figure 4-21.*
   - Two C.B.S. M3 x 8 screws
5. Release the two tabs that secure the I/H COVER L ASSY. and remove it. *See Figure 4-21.*

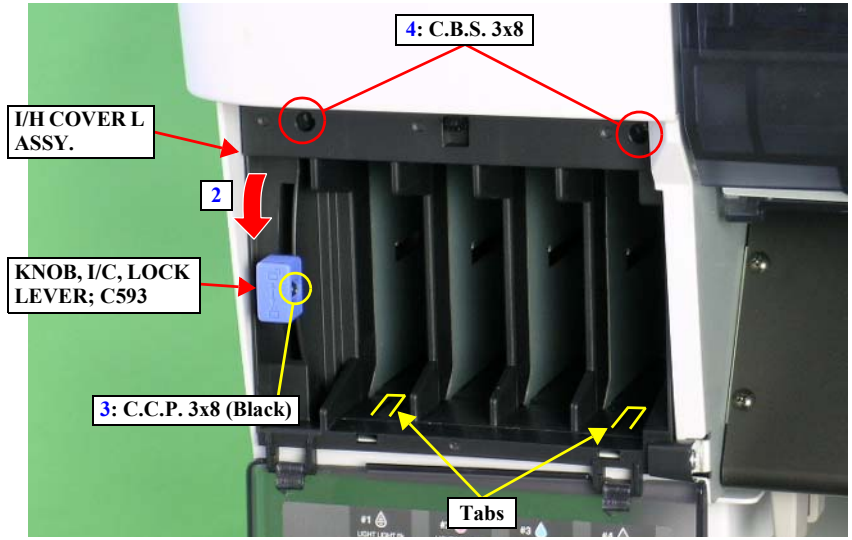

Figure 4-21. Removing the I/H COVER L ASSY.

4.2.3.4 R SIDE COVER ASSY.

CAUTION

Ink may leak from the Cleaning Unit while or after removing the R SIDE COVER ASSY. Have a waste cloth beforehand to wipe out the leaked ink. When the R SIDE COVER ASSY. must be removed for many hours, set the Maintenance Tank to collect ink leaked from the Cleaning Unit.

1. Remove the PANEL ASSY. *See Section 4.2.3.1 on page 220.*
2. Remove the Maintenance Tank. *See Section 4.2.2.2 on page 217.*
3. Remove the Spindle. *See Section 4.2.2.4 on page 219.*
4. Remove the H Top Cover Assy. *See Section 4.2.3.2 on page 221.*
5. Remove the I/H COVER R ASSY. *See Section on page 222.*
6. Move the PRESSURE LEVER KNOB to its rear end position, and remove the screw that secures the knob.
   - One C.B.P. (P1) M4 x 12 screw
7. Move the PRESSURE LEVER KNOB to its front end position and remove it.
8. Move the PRESSURE LEVER to its rear end position.
9. Remove the Side Cover Screw Cap.

CAUTION

Never forget to reattach the Side Cover Screw Cap, or the printer may malfunction due to noise occurred in the internal electric circuits. The caps are necessary to prevent the noise.

10. Remove the eight screws that secure the R SIDE COVER ASSY. and remove it.
    - Three C.B.P. M4 x 12 screws
    - One C.F.P. M4 x 12 screw
    - Four C.C.S. M4 x 8 screws

REASSEMBLY

Make sure that there is no gap between the R SIDE COVER ASSY. and the frame, then screw the R SIDE COVER ASSY.

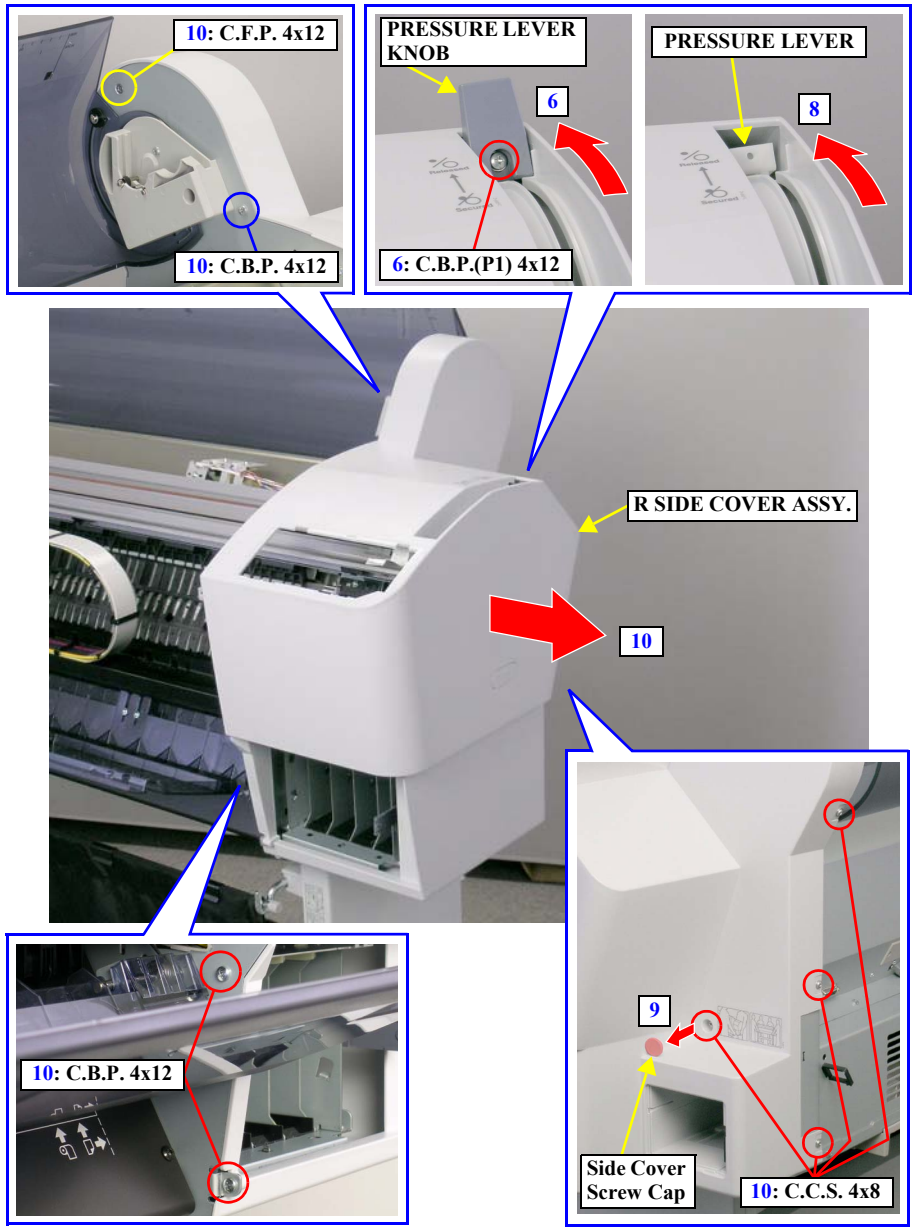

Figure 4-22. Removing the R SIDE COVER ASSY.

4.2.3.5 L SIDE COVER ASSY.

CAUTION

Ink may leak from the Cleaning Unit while or after removing the L SIDE COVER ASSY. Have a waste cloth beforehand to wipe out the leaked ink. When the L SIDE COVER ASSY. must be removed for many hours, set the Maintenance Tank to collect ink leaked from the Cleaning Unit.

CHECK POINT

The Stylus Pro 9400/9800 have two Maintenance Tanks, and the 7400/7800 have one tank on its right side.

1. Remove the Maintenance Tank. *See Section 4.2.2.2 on page 217.*
2. Remove the Spindle. *See Section 4.2.2.4 on page 219.*
3. Remove the H Top Cover Assy. *See Section 4.2.3.2 on page 221.*
4. Remove the I/H COVER L ASSY. *See Section on page 222.*
5. Remove the Side Cover Screw Cap.

CAUTION

Never forget to reattach the Side Cover Screw Cap, or the printer may malfunction due to noise occurred in the internal electric circuits. The caps are necessary to prevent the noise.

6. Remove the eight screws that secure the L SIDE COVER ASSY. and remove it.
   - Three C.B.P. M4 x 12 screws
   - One C.F.P. M4 x 12 screw
   - Four C.C.S. M4 x 8 screws

REASSEMBLY

Make sure that there is no gap between the L SIDE COVER ASSY. and the frame, then screw the L SIDE COVER ASSY.

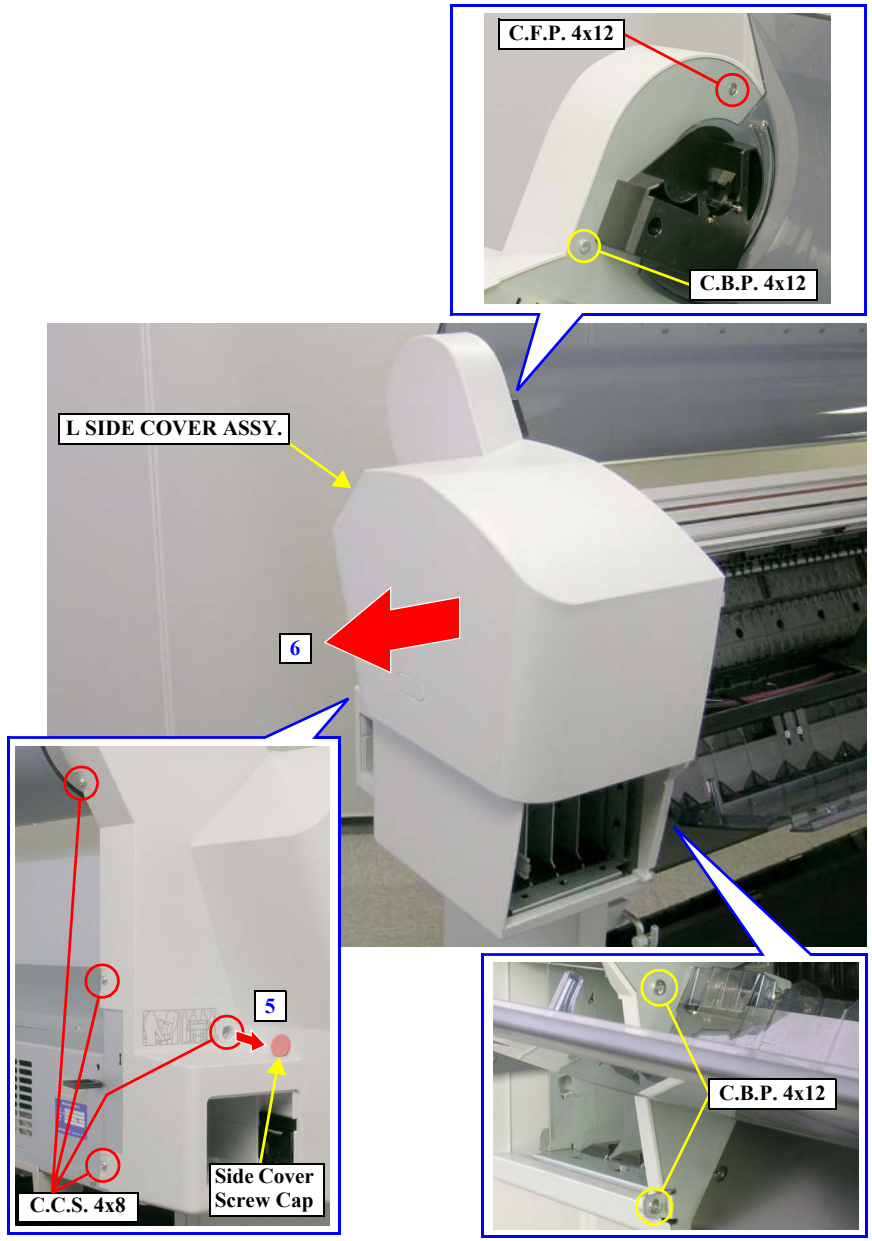

Figure 4-23. Removing the L SIDE COVER ASSY.

4.2.3.6 COVER, REAR

1. Remove the two screws that secure the COVER, CONNECTOR, UPPER; B and remove it. *See Figure 4-24.*
   - Two C.C.S. M3 x 12 screws
2. Remove the two screws that secure the COVER, I/F and remove it together with the GROUND PLATE, IF. *See Figure 4-25.*
   - Two C.B.S. M3 x 6 screws

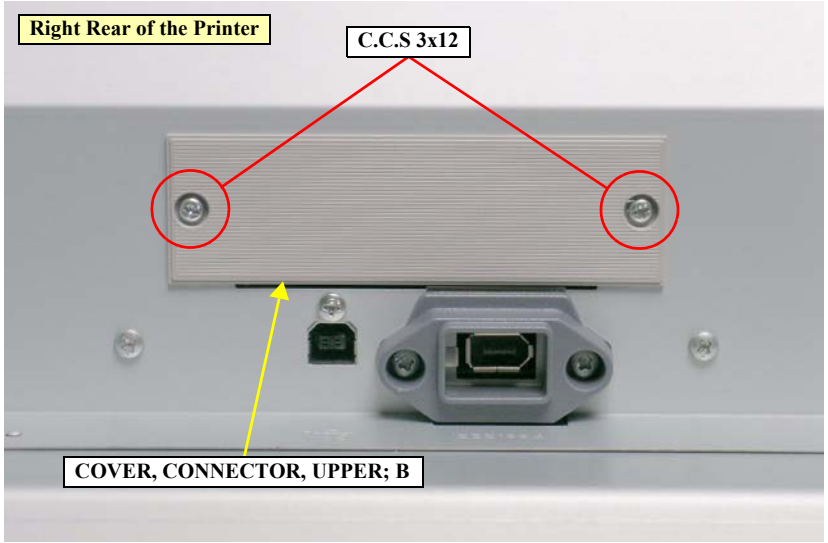

Figure 4-24. Removing the COVER, CONNECTOR, UPPER; B

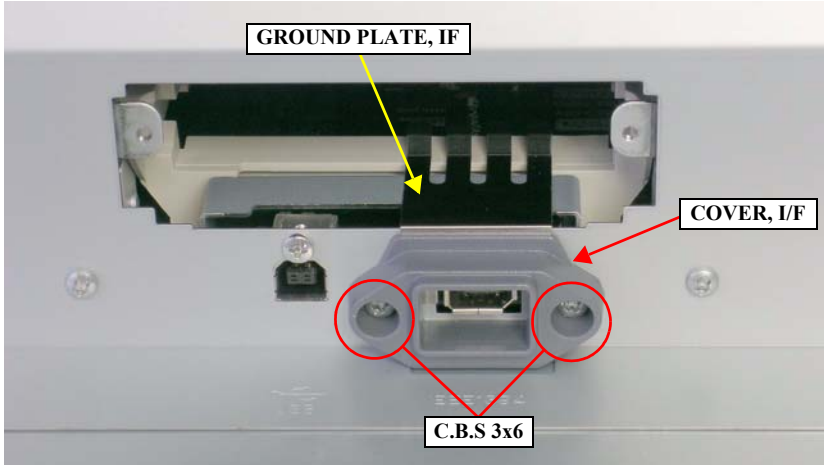

Figure 4-25. Removing the COVER, I/F and the GROUND PLATE, IF

3. Open the ROLL TOP COVER.
4. Remove the 14 screws that secure the COVER, REAR.
   - Ten C.B.S. M4 x 6 screw
   - One C.B.S. M3 x 6 screw
   - One C.B. M3 x 6 screw
   - Two hex socket screws

CHECK POINT

The Stylus Pro 7400/7800 use ten screws to secure the COVER, REAR.
- **Six C.B.S. M4 x 6 screws**
- **One C.B.S. M3 x 6 screw**
- **One C.B. M3 x 6 screw**
- **Two hex socket screws**

5. Close the ROLL TOP COVER.
6. Release the COVER, REAR from the two guide pins and remove the COVER, REAR.

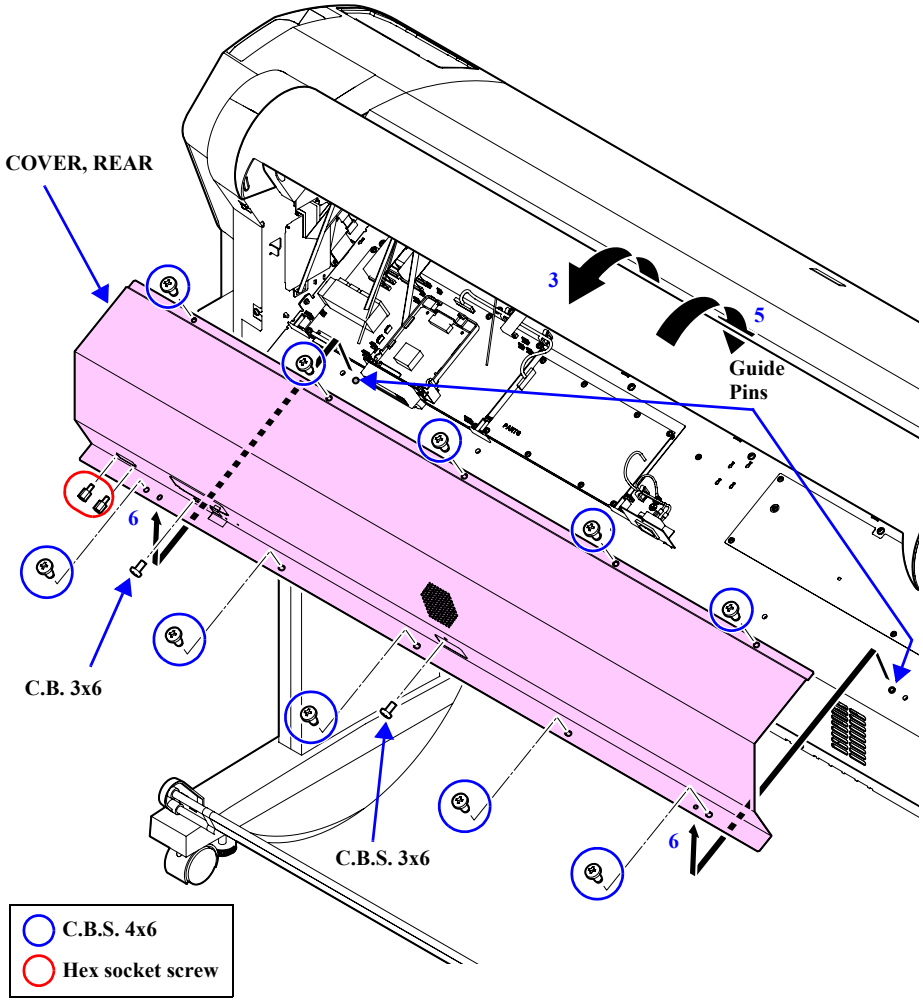

Figure 4-26. Removing the COVER, REAR

4.2.3.7 P GUIDE L ASSY.

CAUTION

Hold the P GUIDE L ASSY. with your hand while removing the screws in the next step, as it may slip off the printer.

1. Remove the four screws that secure the P GUIDE L ASSY. and remove it.
   - Four C.T.S. M4 x 6 screws (black)

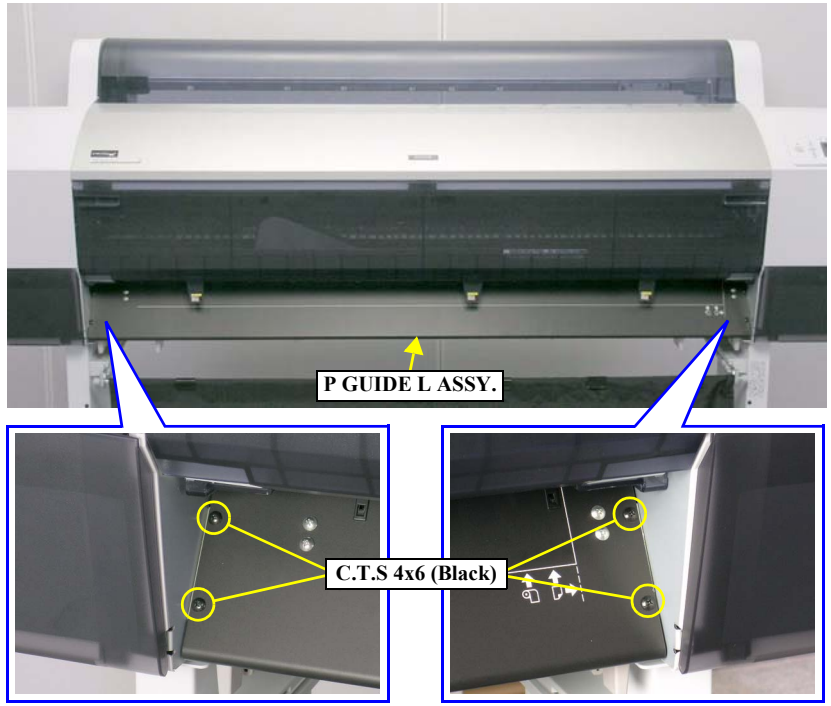

Figure 4-27. Removing the P GUIDE L ASSY.

4.2.3.8 ROLL TOP COVER

1. Remove the Spindle. *See Section 4.2.2.4 on page 219.*
2. Remove the two screws that secure the ROLL TRAY L ASSY. and remove it. *See Figure 4-28.*
   - Two C.C.S. M4 x 8 screws
3. Remove the E-RING, 4 that secures the TOP COVER SPACER and remove it. *See Figure 4-29.*

CHECK POINT

- **The Stylus Pro 7400/7800 do not have the TOP COVER SPACER and the E-RING,4.**
- **While performing the next step for the Stylus Pro 7400/7800, hold the ROLL TOP COVER with your hand as it may slip off the printer.**

4. Remove the three screws that secure the ROLL TRAY R ASSY. and remove it. *See Figure 4-29.*
   - Two C.C.S. M4 x 8 screws
   - One roll bearing R screw 14

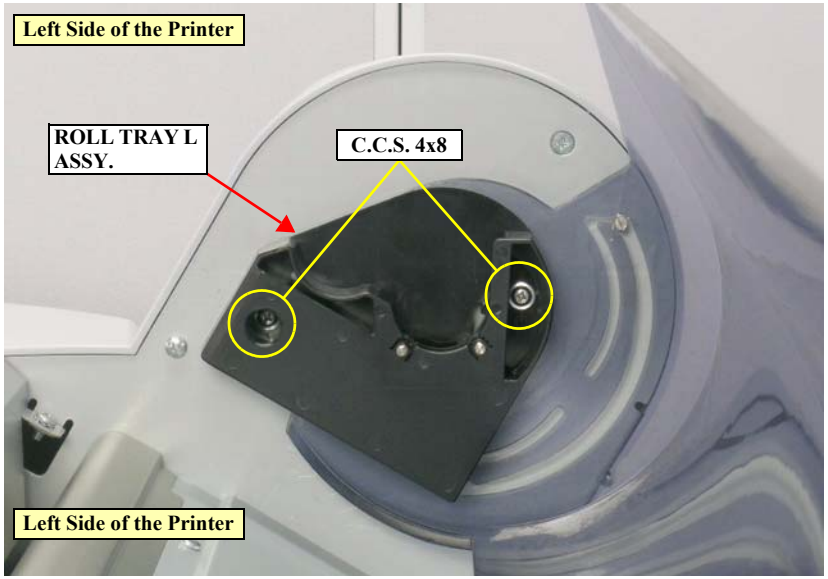

Figure 4-28. Removing the ROLL TRAY L ASSY.

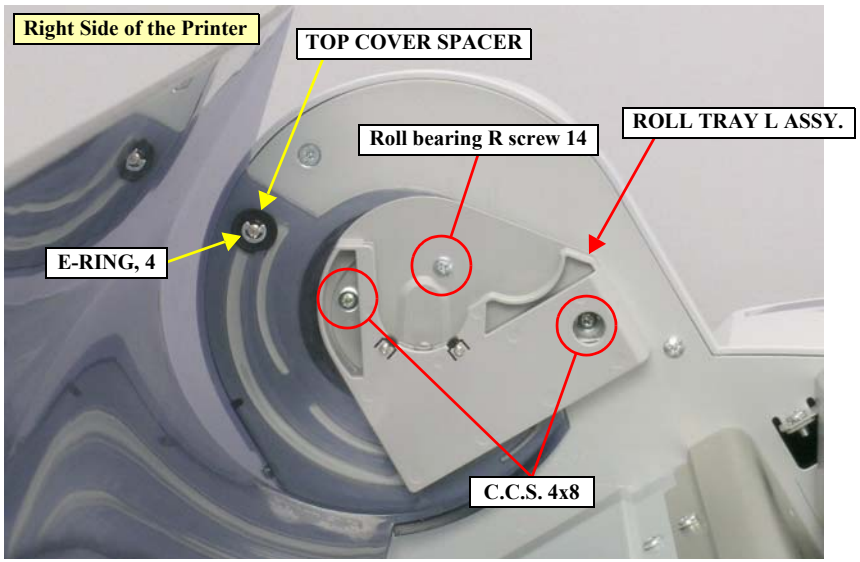

Figure 4-29. Removing the ROLL TRAY R ASSY.

5. Slide the ROLL TOP COVER leftward and remove the UNDULATE WASHER and the DAMPER DISK. *See Figure 4-31.*

CAUTION

- **Be sure to reattach the UNDULATE WASHER and the DAMPER DISK in the correct order.**

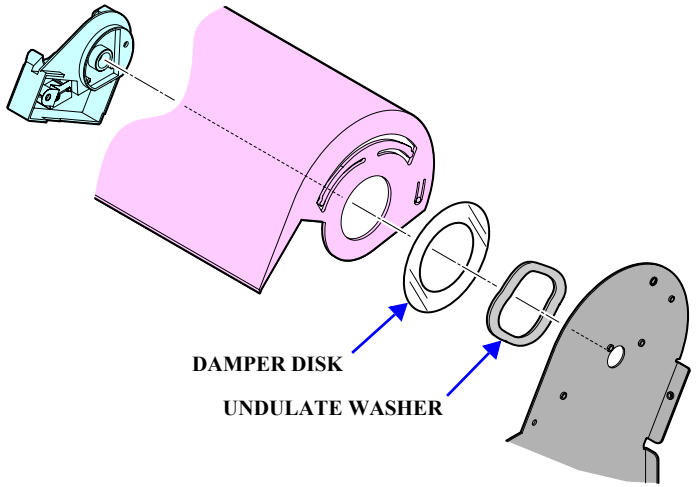

Figure 4-30. Reinstalling the UNDULATE WASHER and DAMPER DISK

- **When performing the next step, be careful not to damage the ROLL TOP COVER.**

CHECK POINT

The next step is not required for the Stylus Pro 7400/7800 as they do not have the break pins.

6. Press the ROLL TOP COVER to the left side to release its right end from the right break pin, and remove the ROLL TOP COVER releasing its left end from the left break pin. *See Figure 4-32.*

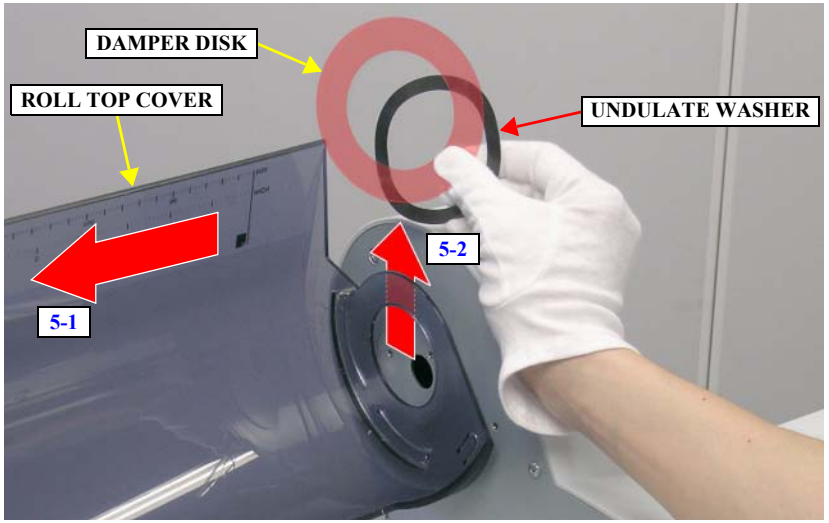

Figure 4-31. Removing the UNDULATE WASHER and DAMPER DISK

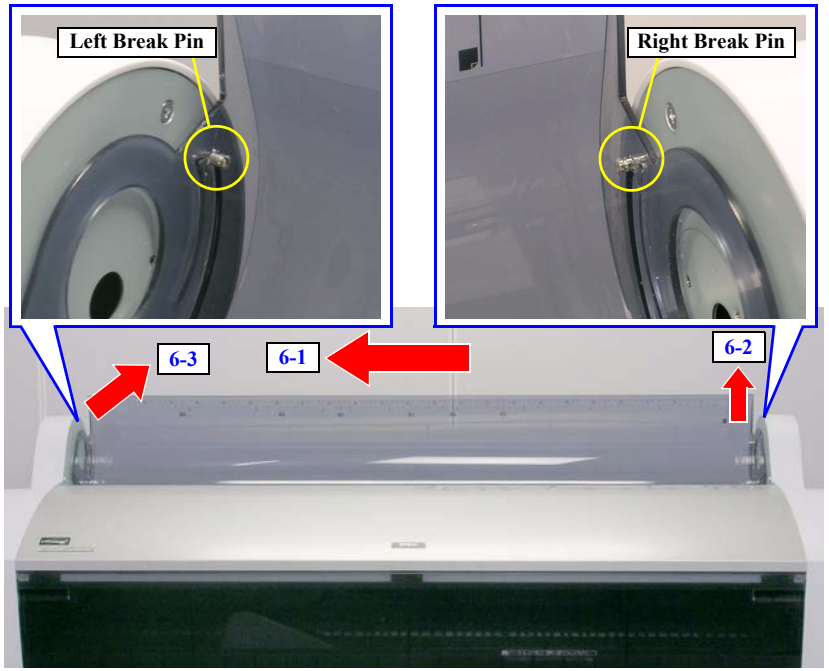

Figure 4-32. Removing the ROLL TOP COVER

4.2.3.9 FRONT COVER ASSY.

1. Open the FRONT COVER ASSY.
2. Remove the four screws that secure the FRONT COVER ASSY. and remove it together with the two Reinforcing Hinges.
   - Four C.C.S. M4 x 10 screws

Make sure that the FRONT COVER, HINGE, L/R and the FRONT COVER SPRING L/R are in the statuses shown in the figure below, and then install the FRONT COVER ASSY.

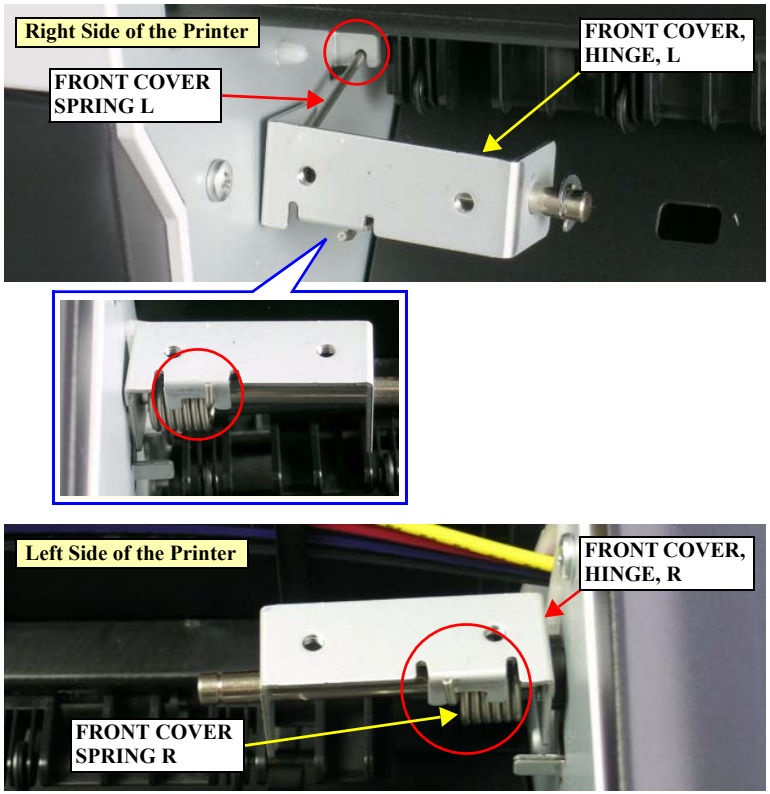

Figure 4-33. Checking the FRONT COVER, HINGE and FRONT COVER SPRING

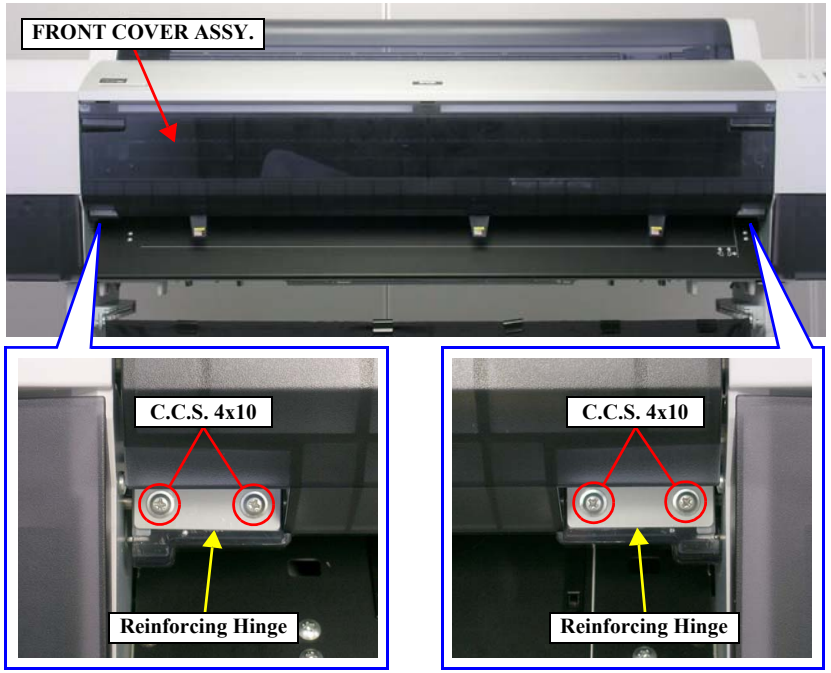

Figure 4-34. Removing the FRONT COVER ASSY.

4.2.3.10 Front Sensor

1. Open the FRONT COVER ASSY.
2. Remove the screw that secures the FRONT SENSOR COVER. *See Figure 4-36.*
   - One C.C.S. M3 x 8 screw
3. Release the tab that secures the FRONT SENSOR COVER and turn it in the direction shown in the figure. *See Figure 4-36.*

- **Set the guide pin of the FRONT SENSOR COVER into the positioning hole on the frame.**
- **Insert the tab of the FRONT SENSOR COVER into the slot of the frame.**

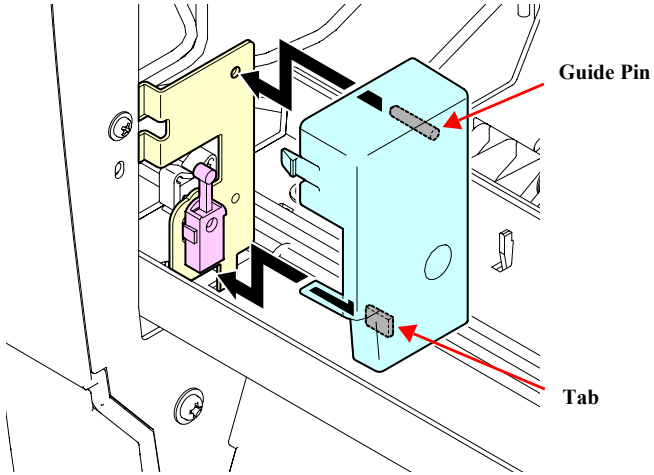

Figure 4-35. Reinstalling the FRONT SENSOR COVER

4. Release the two hooked tabs that secure the FRONT SENSOR and remove it. *See Figure 4-37.*
5. Remove the connector from the FRONT SENSOR. *See Figure 4-37.*

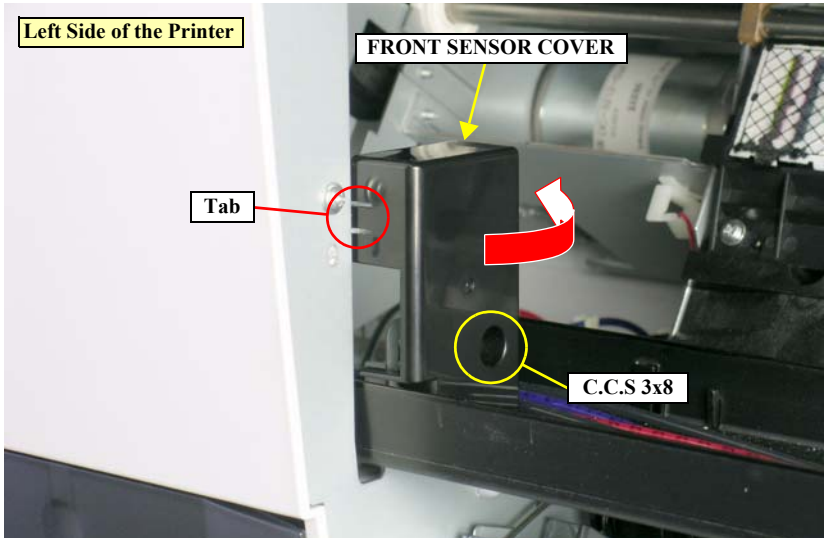

Figure 4-36. Removing the FRONT SENSOR COVER

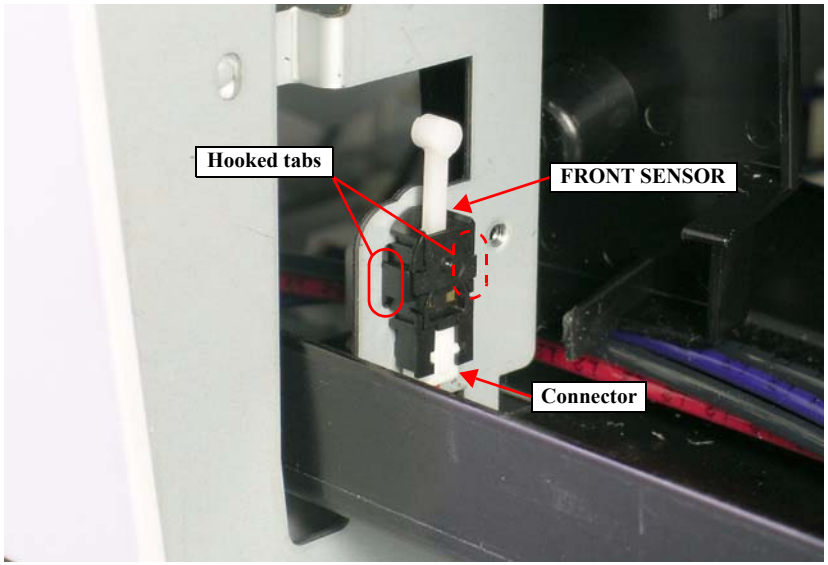

Figure 4-37. Removing the FRONT SENSOR

4.2.4 Removing the Circuit Boards

4.2.4.1 BOARD ASSY., MAIN

CAUTION

Do not insert FFCs into the connectors at an angle. Doing so may damage, short, or break the terminals in the connector resulting in a breakdown of the elements on the board.

1. Remove the Rear Cover. *See Section 4.2.3.6 on page 225.*
2. Disconnect the following connectors and FFCs from the BOARD ASSY., MAIN.

Table 4-3. Connectors and FFCs Connected to the BOARD ASSY., MAIN

Connector No.	Color	Number of Pins	Destination
CN1	White	14	P/S BOARD ASSY. (CN001)
CN9	---	20	PANEL ASSY.
CN10	---	3	P Rear Sensor
CN13	White	3	Relay harness (CR MOTOR ASSY.)
CN14	White	2	Relay harness (PF MOTOR ASSY.)
CN15	Black	4	Relay harness (Pressure Motor)
CN16	White	4	Relay harness (Pump Motor)
CN17	---	31	BOARD ASSY., SUB (CN1)
CN18	---	31	BOARD ASSY., SUB (CN2)
CN20	---	31	BOARD ASSY., SUB (CN4)
CN21	---	26	BOARD ASSY., SUB; B (CN1)
CN23	---	26	BOARD ASSY., SUB; C (CN1)
CN25	Black	3	Relay harness (Right VACUUM FAN ASSY.)
CN26	Red	3	Relay harness (Middle VACUUM FAN ASSY.)
CN27	Yellow	3	Relay harness (Left VACUUM FAN ASSY.)
CN31	White	3	Regulator Solenoid (relay harness)

REASSEMBLY

Connect the FFCs to their correct positions matching the numbers written on the FFCs with those printed on the board as shown in Figure 4-39.

- **CN17, CN18, CN20, CN21, CN23**

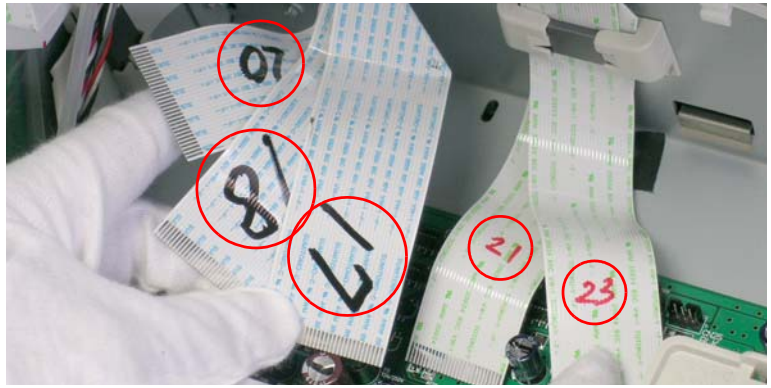

Figure 4-38. Reconnecting FFCs

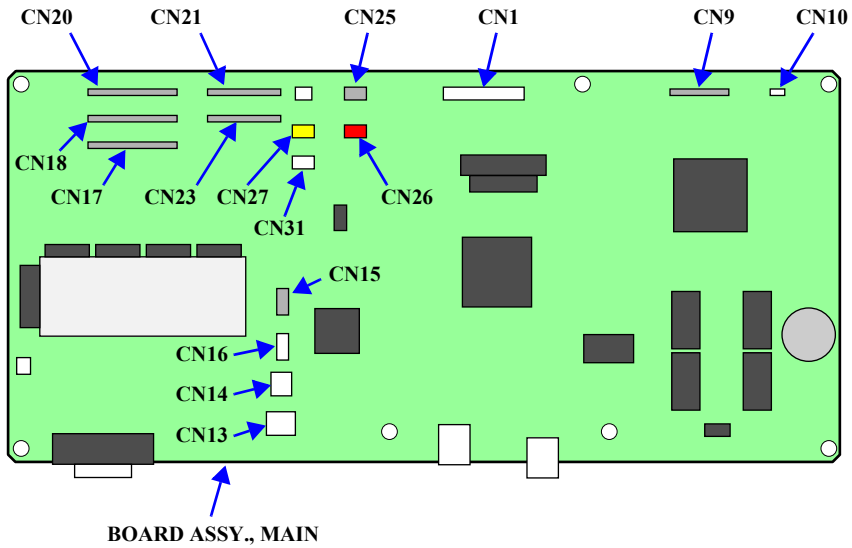

Figure 4-39. Connector Locations

3. Remove the seven screws that secure the BOARD ASSY., MAIN and remove it.
   - Seven C.C.S. M3 x 6 screws

CAUTION

- **Do not put the board directly on conductive surfaces with its side that components are soldered to facing down.**
- **A lithium battery is preinstalled on the boards provided as service parts. So, direct contact between the board surface that components are soldered to and conductive materials, or putting conductive materials on the circuits must be avoided.**

ADJUSTMENT REQUIRED

Whenever the BOARD ASSY., MAIN is replaced, the corresponding adjustments must be carried out. ***See Chapter 5 on page 292.***

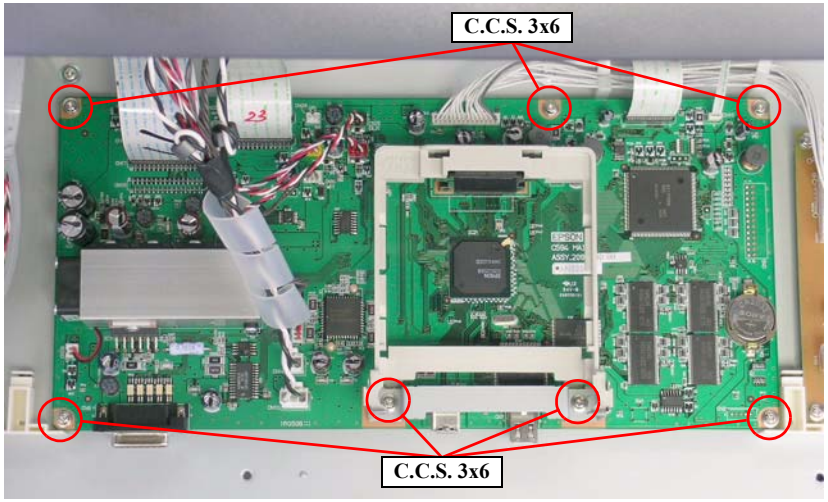

Figure 4-40. Removing the BOARD ASSY., MAIN

4.2.4.2 P/S BOARD ASSY.

WARNING

When removing the P/S BOARD ASSY., do not start the work immediately after disconnecting the AC cable. Wait for at least five minutes for the electrolytic capacitor to finish discharging residual charges.

1. Remove the Rear Cover. *See Section 4.2.3.6 on page 225.*
2. Remove the all connectors on the P/S BOARD ASSY.

Table 4-4. Connectors on the P/S BOARD ASSY.

Connector No.	Color	Number of Pins	Destination
CN001	White	2	INLET ASSY.
CN301	White	14	BOARD ASSY., MAIN (CN1)

3. Remove the eight screws that secure the P/S BOARD ASSY., and remove it.
   - Eight C.C.S. M3 x 6 screws

ADJUSTMENT REQUIRED

Whenever the P/S BOARD ASSY. is replaced, the corresponding adjustments must be carried out. *See Chapter 5 on page 292.*

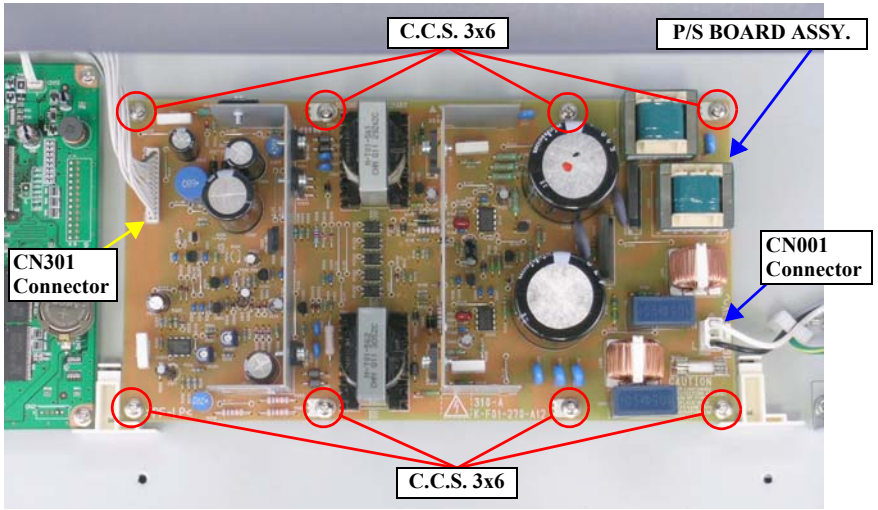

Figure 4-41. Removing the P/S BOARD ASSY.

4.2.4.3 INLETS ASSY.

When removing the INLET ASSY., do not start the work immediately after disconnecting the AC cable. Wait for at least five minutes for the electrolytic capacitor to finish discharging residual charges.

1. Remove the Rear Cover. *See Section 4.2.3.6 on page 225.*
2. Remove the screw that secures the grounding wire.
   - One C.C.S. M4 x 8 screw
3. Disconnect the connector of the INLET ASSY. from the P/S BOARD ASSY., and release the INLET ASSY harness and the grounding wire from the retaining clip.
4. Remove the screw that secures the INLET ASSY.
   - One C.C.S. M4 x 8 screw
5. Slide the INLET ASSY leftwards to release its right bottom tab from the notch, and remove the INLET ASSY.

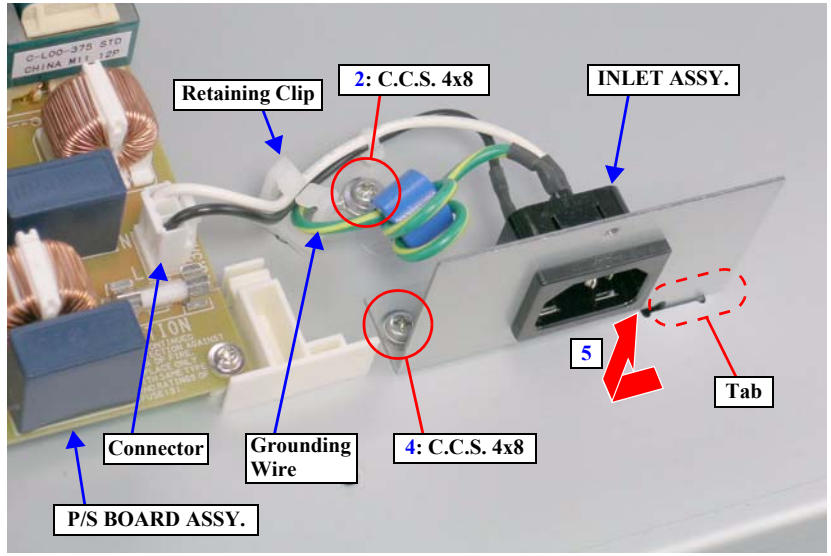

Figure 4-42. Removing the INLET ASSY.

4.2.4.4 BOARD ASSY., SUB

1. Remove the H Top Cover. *See Section 4.2.3.2 on page 221.*
2. Unlock the CARRIAGE ASSY. and move the unit to the center. *See Section 4.2.1.2 on page 215.*
3. Loosen the screw that secures the CR COVER ASSY.
4. Lift the right side of the CR Cover to release it from the tab and remove the CR COVER ASSY.
   - One C.P.S.(S-P2) M3 x 8 screw

CAUTION

When reinstalling the CR COVER ASSY., be careful not to trap any of the harnesses between the cover and the main unit.

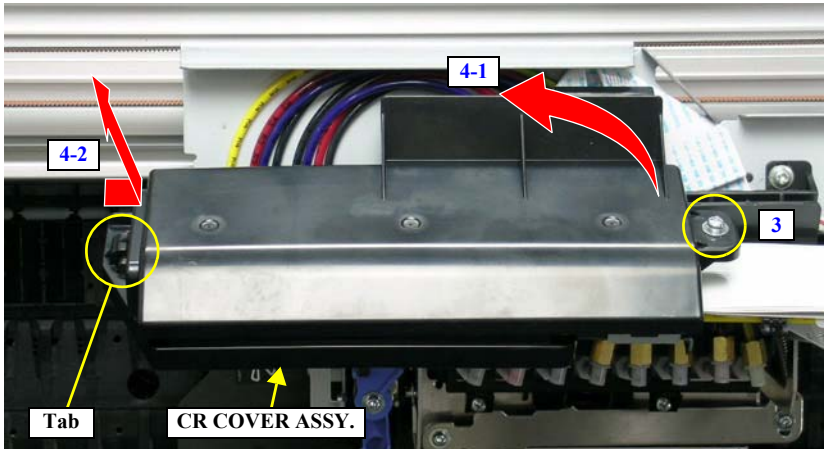

Figure 4-43. Removing the CR COVER ASSY.

5. Disconnect the all connectors and FFCs from the BOARD ASSY., SUB. *See Figure 4-44.*

Table 4-5. Connectors and FFCs Connected to the BOARD ASSY., SUB

Connector No.	Color	Number of Pins	Destination	Connector No.	Color	Number of Pins	Destination
CN1	---	31	BOARD ASSY., MAIN (CN17)	CN7	White	2	Cutter Solenoid Assy.
CN2	---	31	BOARD ASSY., MAIN (CN18)	CN8	---	4	IM (Ink Mark) Sensor
CN3	---	---	Not used	CN9	---	5	CR Encoder Sensor
CN4	---	31	BOARD ASSY., MAIN (CN20)	CN10	Red	4	P Edge Sensor
CN5	---	31	Print Head	CN12	Black	2	PG HP Sensor
CN6	---	31	Print Head	CN13	White	2	CR HP Sensor

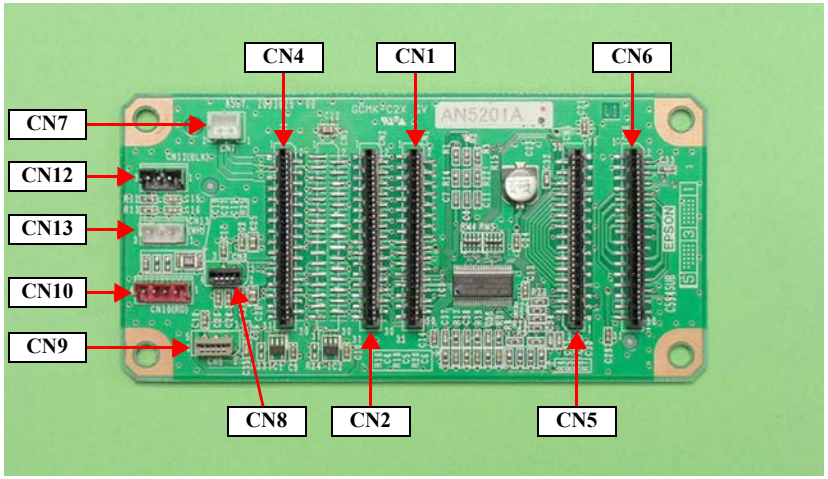

Figure 4-44. Connector Locations

REASSEMBLY

Connect the FFCs to their correct positions matching the numbers written on the FFCs with those printed on the board as shown in Figure 4-44.

- **CN1, CN2, CN4, CN5, CN6**

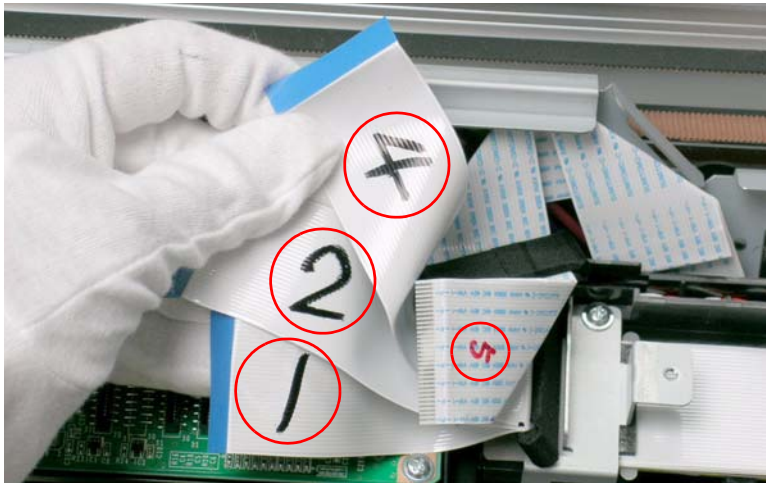

Figure 4-45. Reconnecting FFCs

6. Remove the four screws that secure the BOARD ASSY., SUB and remove the C594 SUB BOARD.
   - Three C.C.P. M3 x 8 screws
   - One C.P.S.(S-P2) M3 x 14 screw

REASSEMBLY

Secure the grounding terminal to the board with the C.P.S. (S-P2) M3 x 14 screw.

ADJUSTMENT REQUIRED

Whenever the BOARD ASSY., SUB is replaced, the corresponding adjustments must be carried out. *See Chapter 5 on page 292.*

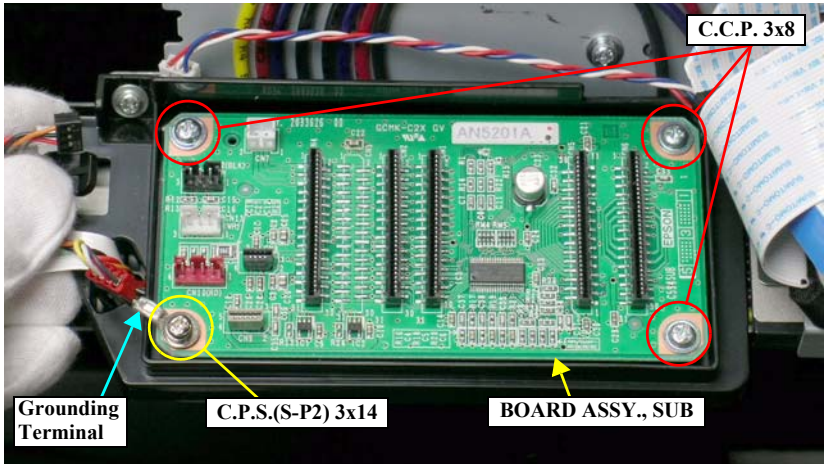

Figure 4-46. Removing the BOARD ASSY., SUB

4.2.4.5 BOARD ASSY., SUB; B

1. Remove the R SIDE COVER ASSY. *See Section 4.2.3.4 on page 223.*
2. Disconnect the all connectors and FFCs from the BOARD ASSY., SUB; B. *See Figure 4-47.*

Table 4-6. Connectors and FFCs Connected to the BOARD ASSY., SUB; B

Connector No.	Color	Number of Pins	Destination	
CN1	---	26	BOARD ASSY., MAIN (CN21)	
CN5	Blue	2	I/C LEVER SENSOR R	
CN6	---	7	CSIC RELAY (R1) BOARD	Photo black (matte black)*1
				Cyan*2
CN7	---	7	CSIC RELAY (R2) BOARD	Cyan*1
				Cyan*2
CN8	---	7	CSIC RELAY (R3) BOARD	Magenta*1
				Yellow*2
CN9	---	7	CSIC RELAY (R4) BOARD	Yellow*1
				Yellow*2
CN10	---	7	Maintenance Tank	
CN12	Red	3	P Thick1 Sensor	
CN13	Yellow	3	PG Thick2 Sensor	
CN20	Black	3	Pump Phase Sensor	

Note *1: Stylus Pro 7800/9800

*2: Stylus Pro 7400/9400

3. Remove the four screws that secure the BOARD ASSY., SUB; B and remove it. *See Figure 4-48.*
   - Four C.C.S. M3 x 8 screws

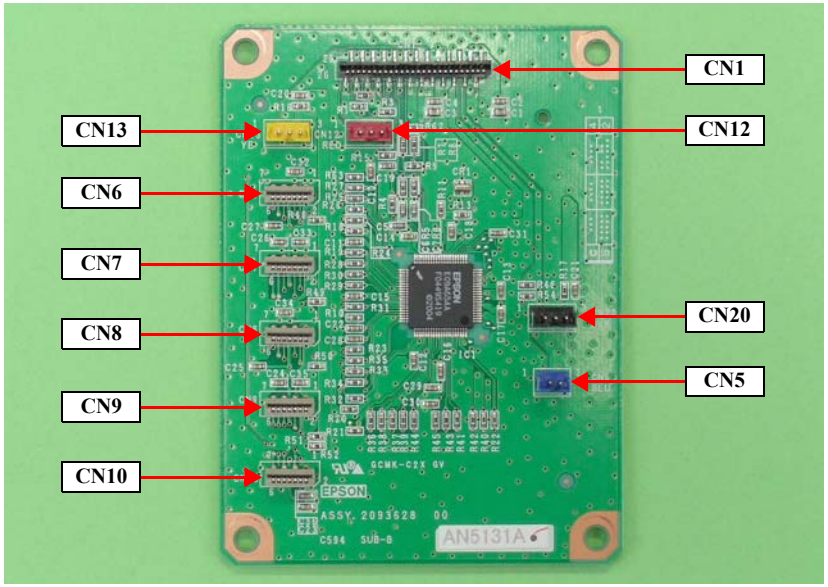

Figure 4-47. Connector Locations

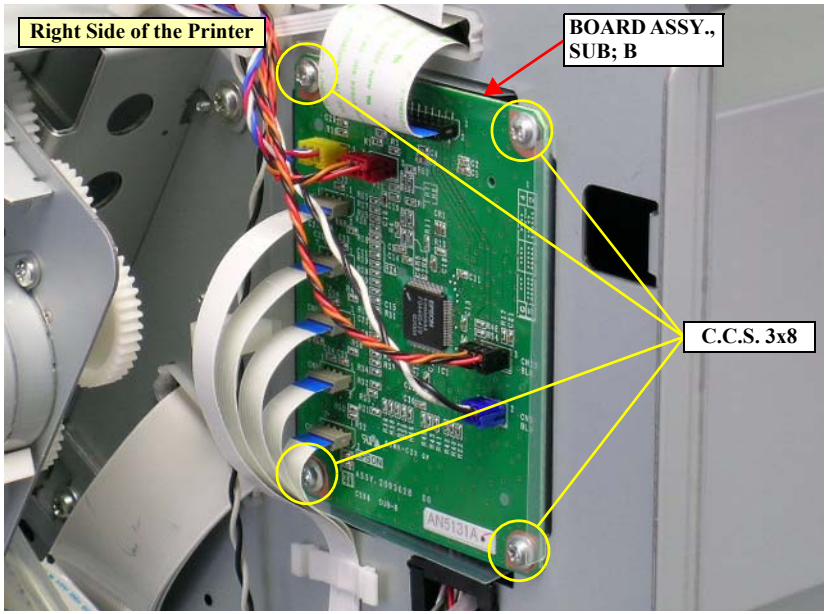

Figure 4-48. Removing the BOARD ASSY., SUB; B

4.2.4.6 BOARD ASSY., SUB; C

1. Remove the L Side Cover Assy. *See Section 4.2.3.5 on page 224.*
2. Disconnect the all connectors and FFCs from the BOARD ASSY., SUB; C. *See Figure 4-49.*

Table 4-7. Connectors and FFCs Connected to the BOARD ASSY., SUB; C

Connector No.	Color	Number of Pins	Destination	
CN1	---	26	BOARD ASSY., MAIN (CN23)	
CN5	Blue	2	I/C LEVER SENSOR L	
CN6	---	7	CSIC RELAY (L1) BOARD	Light light black*1
				Matte black*2
CN7	---	7	CSIC RELAY (L2) BOARD	Light magenta*1
				Matte black*2
CN8	---	7	CSIC RELAY (L3) BOARD	Light cyan*1
				Magenta*2
CN9	---	7	CSIC RELAY (L4) BOARD	Light black*1
				Magenta*2
CN10	White	4	PF Encoder Sensor	
CN15	Red	3	Pressure Sensor	
CN16	Black	2	Front Sensor	
CN17	---	7	Maintenance Tank*3	

Note *1: Stylus Pro 7800/9800
*2: Stylus Pro 7400/9400
*3: Stylus Pro 9400/9800 only

3. Remove the four screws that secure the BOARD ASSY., SUB; C and remove it. *See Figure 4-50.*
   - Four C.C. M3 x 6 screws

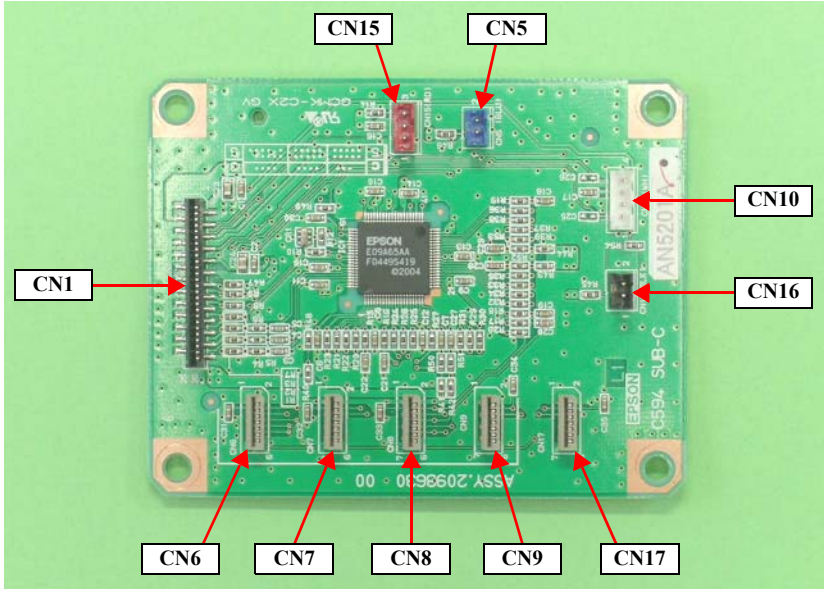

Figure 4-49. Connector Locations

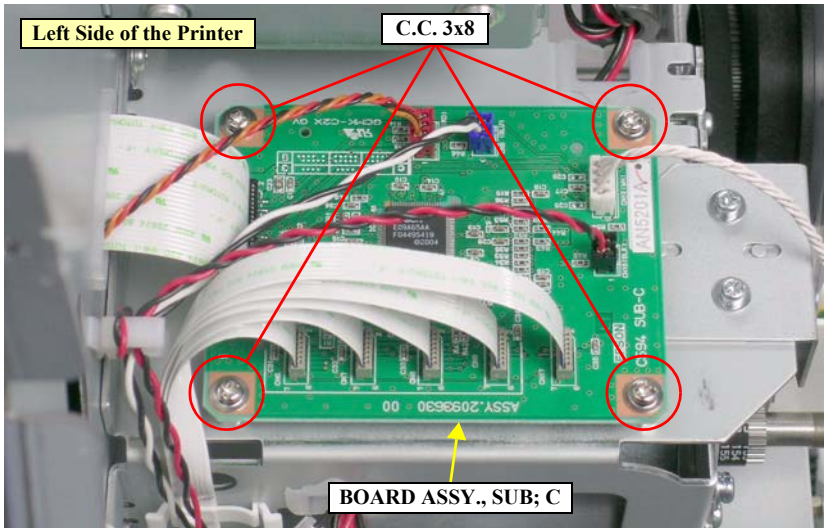

Figure 4-50. Removing the BOARD ASSY., SUB; C

4.2.5 Removing the Carriage Mechanism

4.2.5.1 CR BELT

1. Remove the R SIDE COVER ASSY. *See Section 4.2.3.4 on page 223.*
2. Remove the CR COVER ASSY. *See Section 4.2.4.4 on page 236.*

CHECK POINT

Before releasing the tension of the CR BELT in the next step, remember the tension level pointed out by the scale on the Driven Pulley Tension Plate. When reinstalling the CR BELT, adjusting the belt tension can be made quickly by putting the scale to the same position.

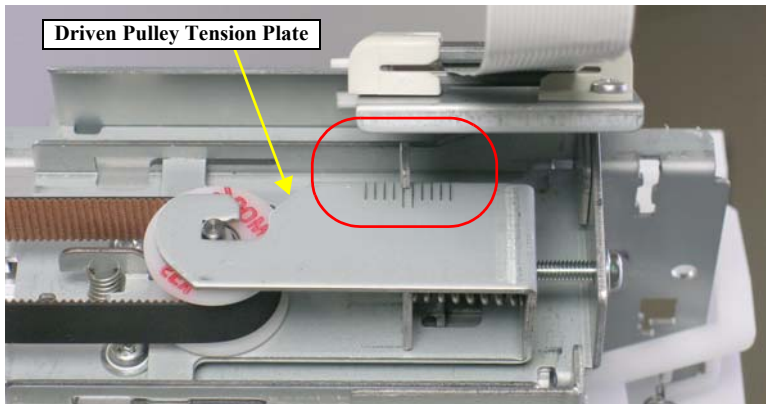

Figure 4-51. Belt Tension Level Scale on the Driven Pulley Tension Plate

3. Loosen the screw that secures the Driven Pulley Tension Plate until the screw end does not protrude from the Tension Nut Plate, and release the tension of the CR BELT. *See Figure 4-52.*
   - One C.C. M4 x 45 screw
4. Remove the CR BELT from the pinion gear of the CR MOTOR ASSY. *See Figure 4-53.*

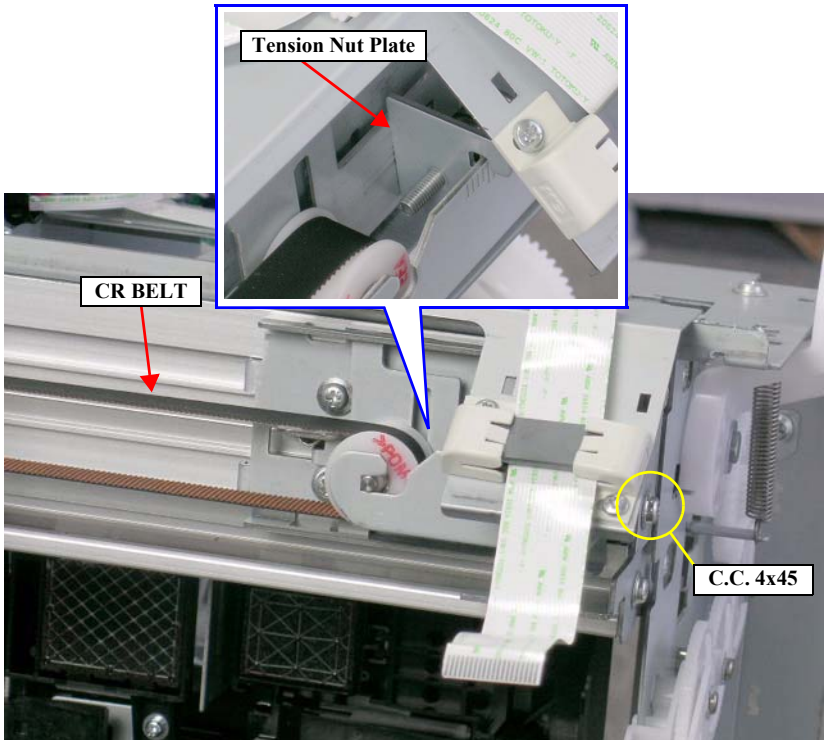

Figure 4-52. Releasing the CR BELT Tension

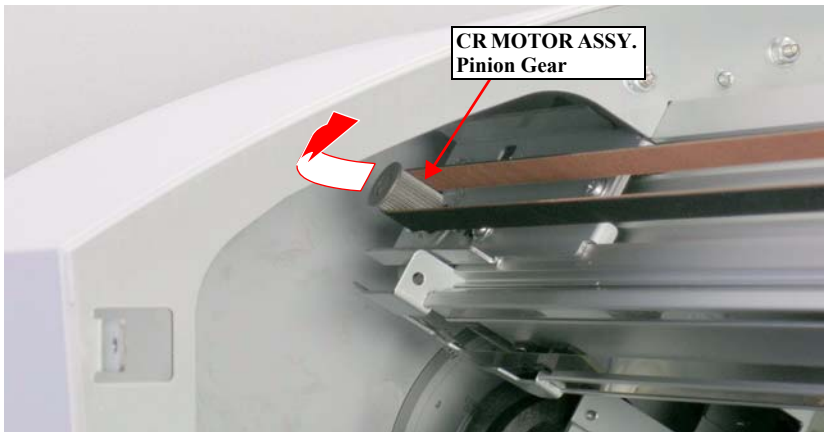

Figure 4-53. Removing the CR BELT (1)

CAUTION

When performing the next step, be careful not to lose the Bearing Retainer and the Driven Pulley Shaft as they may come off the CR DRIVE PULLEY ASSY. If they come off, reattach them with reference to the figure below.

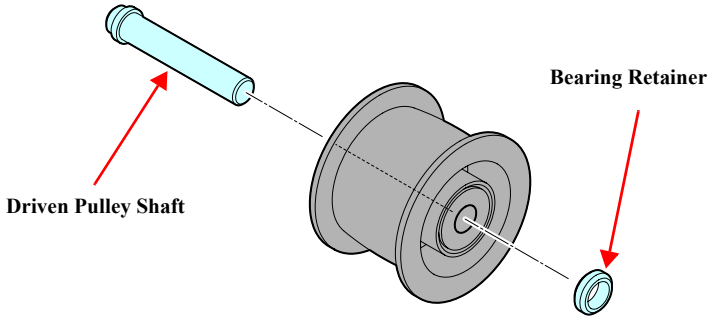

Figure 4-54. Reassembling the CR DRIVE PULLEY ASSY.

5. Remove the CR DRIVE PULLEY ASSY. and the CR BELT from the two notches of the Driven Pulley Tension Plate, and remove the CR BELT from the CR DRIVE PULLEY ASSY. *See Figure 4-55.*
6. Remove the two screws that secure the MAIN TUBE HOLDER. *See Figure 4-56.*
   - Two C.P.S.(S-P2) M3 x 8 screws

REASSEMBLY

Set the two positioning holes of the MAIN TUBE HOLDER onto the two guide pins. ***See Figure 4-56.***

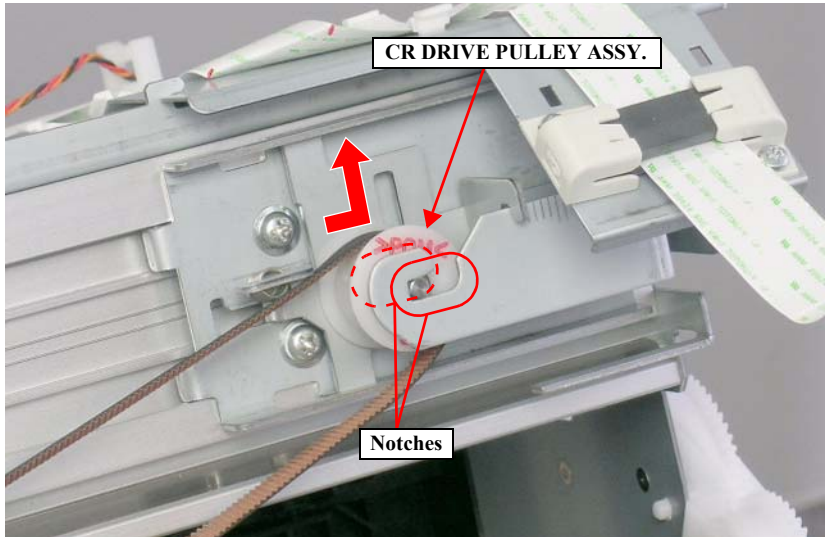

Figure 4-55. Removing the CR BELT (2)

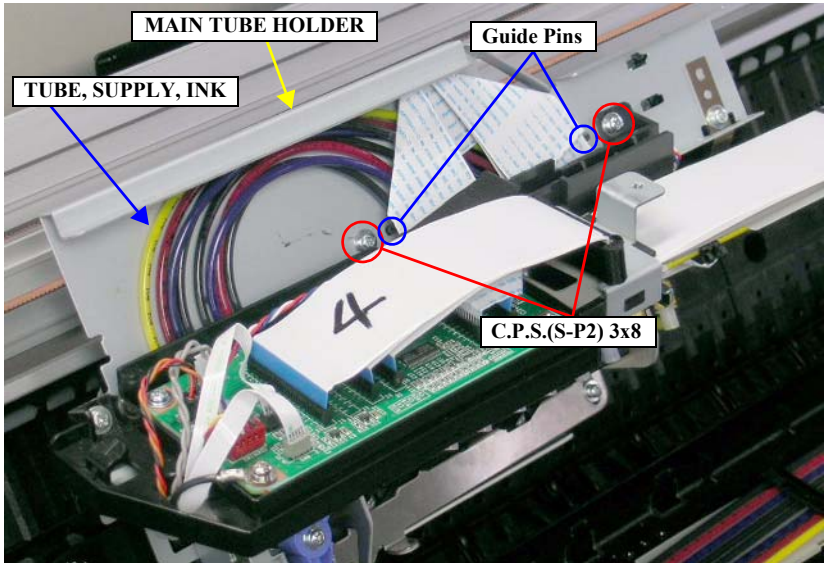

Figure 4-56. Screws for the MAIN TUBE HOLDER

7. Tilt the MAIN TUBE HOLDER frontward and pull out the CR BELT from the retainer of the CARRIAGE ASSY.

ADJUSTMENT REQUIRED

Whenever the CR BELT is reinstalled or replaced, the corresponding adjustment must be carried out. ***See Chapter 5 on page 292.***

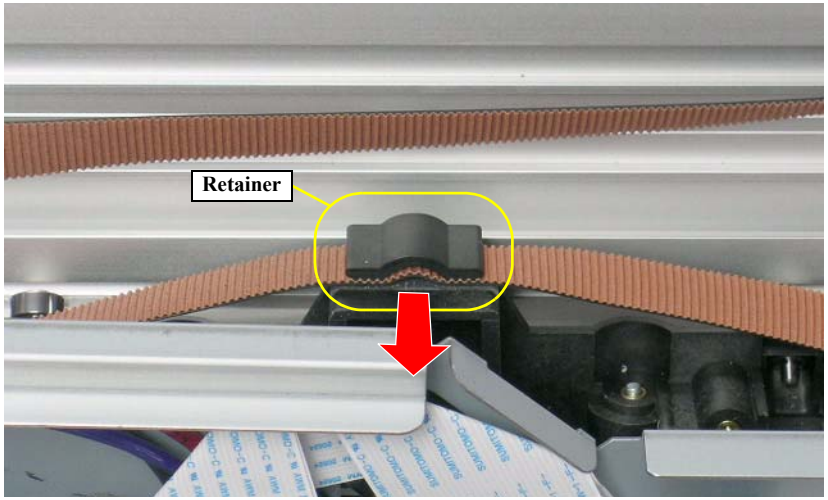

Figure 4-57. Removing the CR BELT (3)

4.2.5.2 CR MOTOR ASSY.

1. Remove the L Side Cover Assy. *See Section 4.2.3.5 on page 224.*
2. Remove the CR BELT from the pinion gear of the CR MOTOR ASSY. *See Section 4.2.5.1 on page 240.*
3. Disconnect the CR MOTOR ASSY. connector from the relay connector, and release the CR MOTOR ASSY. harness from the two retaining clips. *See Figure 4-58.*

CAUTION

Beware of the following items when performing the next step.
- **Hold the CR MOTOR ASSY. with your hand while removing the screws as it may slip off the printer.**
- **Be careful not to damage the pinion gear of the CR MOTOR ASSY.**
- **Exercise care to avoid deforming or damaging the SCALE, PF. *See Figure 4-59.***

4. Remove the three screws that secure the CR MOTOR ASSY. and remove it. *See Figure 4-59.*
   - Three C.P.S.(S-P2) M4 x 8 screws

REASSEMBLY

- **Replace the SCALE. CR at the timing described below. *See Section 4.2.5.7 on page 251.***
  - **Stylus Pro 7400/7800: Every other time the CR MOTOR ASSY. is replaced**
  - **Stylus Pro 9400/9800: Each time the CR MOTOR ASSY. is replaced**
- **Reinstall the CR MOTOR ASSY. so that the harness outlet of the assy. faces up. *See Figure 4-59.***

ADJUSTMENT REQUIRED

Whenever the CR MOTOR ASSY. is reinstalled or replaced, the corresponding adjustment must be carried out. *See Chapter 5 on page 292.*

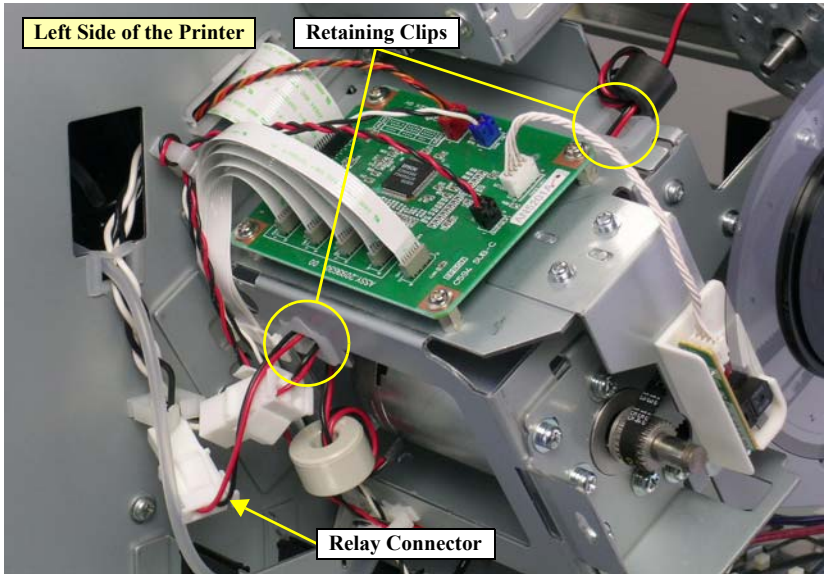

Figure 4-58. Releasing the CR MOTOR ASSY. Harness

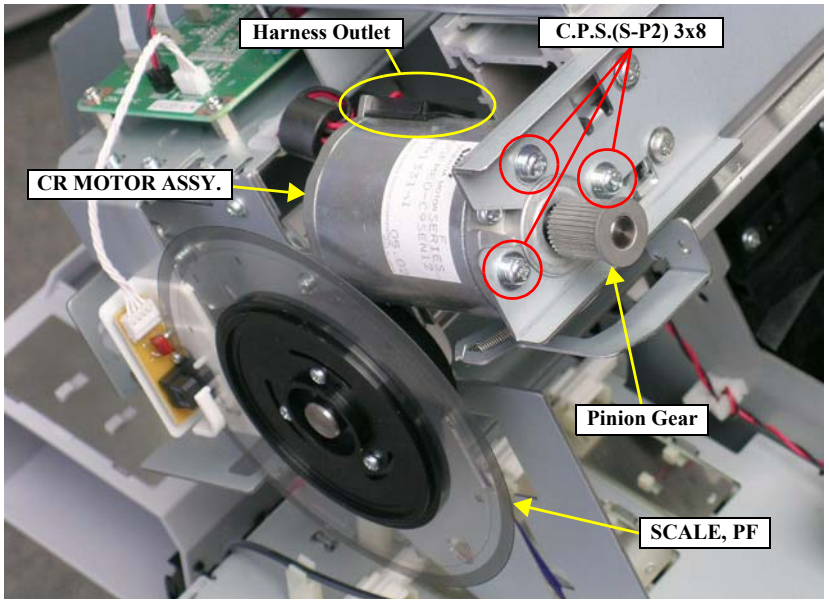

Figure 4-59. Removing the CR MOTOR ASSY.

4.2.5.3 CR HP Sensor

1. Remove the MAIN TUBE HOLDER. *See Section 4.2.5.1 on page 240.*

CAUTION

When performing the next step, be careful not to pull out the MAIN TUBE HOLDER forcibly as TUBE, SUPPLY, INKs are routed inside the holder.

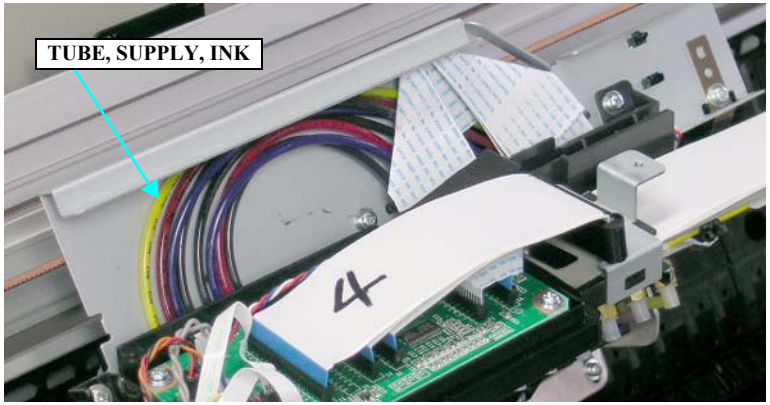

Figure 4-60. Handling the MAIN TUBE HOLDER

2. Pull out the MAIN TUBE HOLDER frontward, and release the three hooked tabs that secure the CR HP Sensor and remove the sensor.
3. Disconnect the connector from the CR HP Sensor.

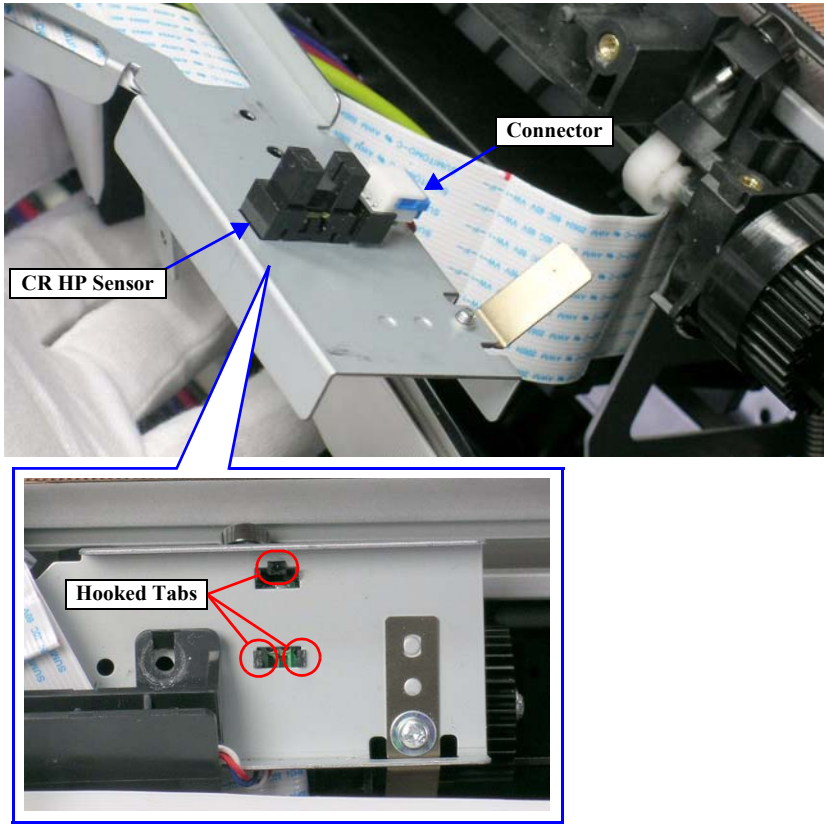

Figure 4-61. Removing the CR HP Sensor

4.2.5.4 PG HP Sensor

1. Remove the MAIN TUBE HOLDER. *See Section 4.2.5.1 on page 240.*

CAUTION

When performing the next step, be careful not to pull out the MAIN TUBE HOLDER forcibly as TUBE, SUPPLY, INKs are routed inside the holder.

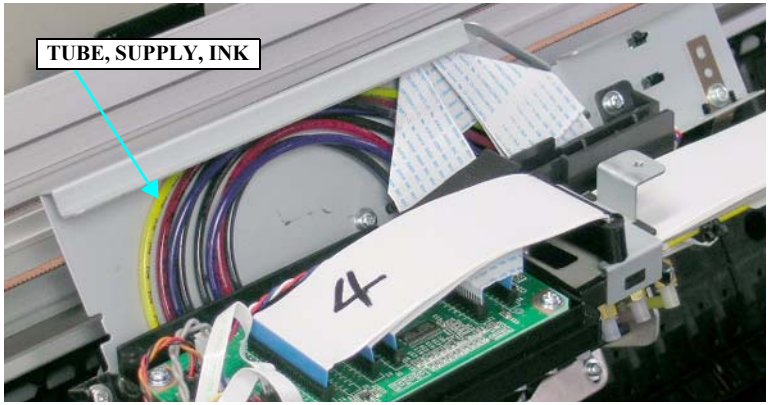

Figure 4-62. Handling the MAIN TUBE HOLDER

2. Pull out the MAIN TUBE HOLDER frontward, and release the three hooked tabs that secure the PG HP Sensor and remove the sensor.
3. Disconnect the connector from the PG HP Sensor.

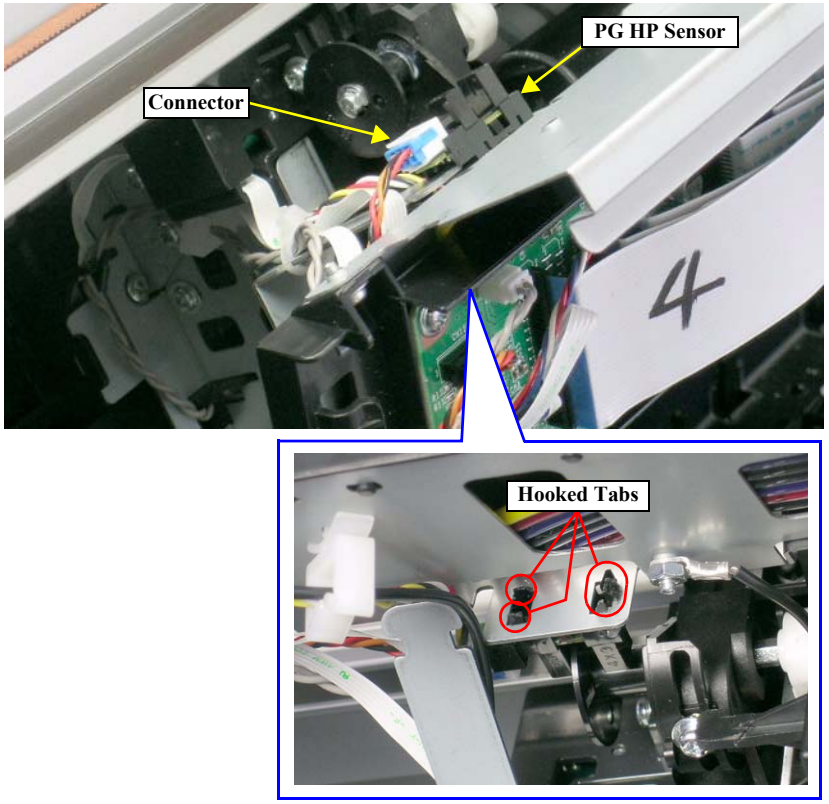

Figure 4-63. Removing the PG HP Sensor

4.2.5.5 CR Encoder Sensor

1. Remove the H TOP COVER ASSY. *See Section 4.2.3.2 on page 221.*
2. Unlock the CARRIAGE ASSY. and move the unit to the center. *See Section on page 215.*

CAUTION

When performing the next step, be careful not to damage the SCALE, CR.

3. Remove the screw that secures the CR ENCODER HOLDER and remove it.
   - One C.P.S.(S-P2) M3 x 8 screw

REASSEMBLY

- **Set the two guide pins on the CR ENCODER HOLDER into the positioning holes on the frame.**

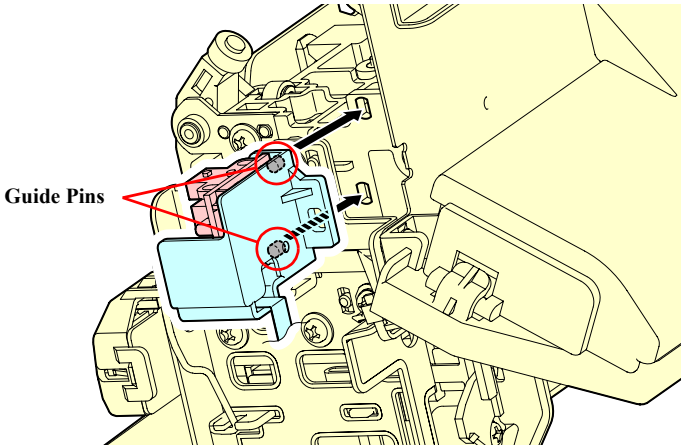

Figure 4-64. Reinstalling the CR ENCODER HOLDER

- **After reinstalling the CR ENCODER HOLDER, make sure that the SCALE, CR is properly inserted into the slit of the CR Encoder Sensor.** ***See Figure 4-65.***

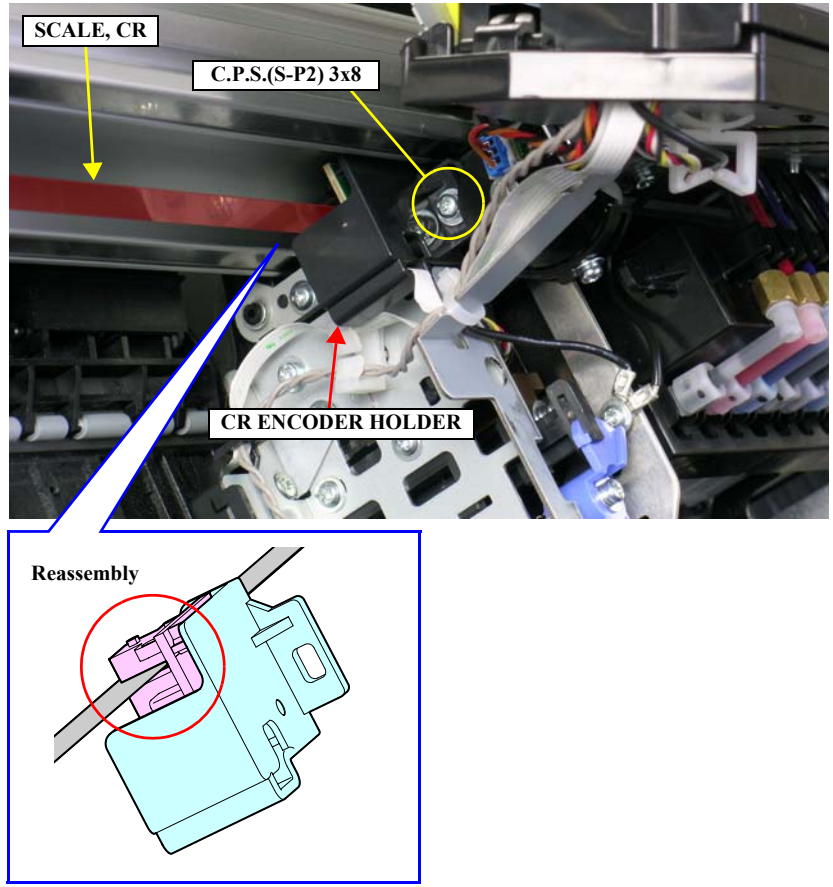

Figure 4-65. Removing the CR ENCODER HOLDER

4. Disconnect the FFC from the CR Encoder Sensor connector.
5. Remove the screw that secures the CR Encoder Sensor and remove it.
   - One C.B.P. M3 x 6 screw

REASSEMBLY

Set the two positioning holes of the CR Encoder Sensor onto the two guide pins.

ADJUSTMENT REQUIRED

Whenever the CR Encoder Sensor is reinstalled or replaced, the corresponding adjustment must be carried out. ***See Chapter 5 on page 292.***

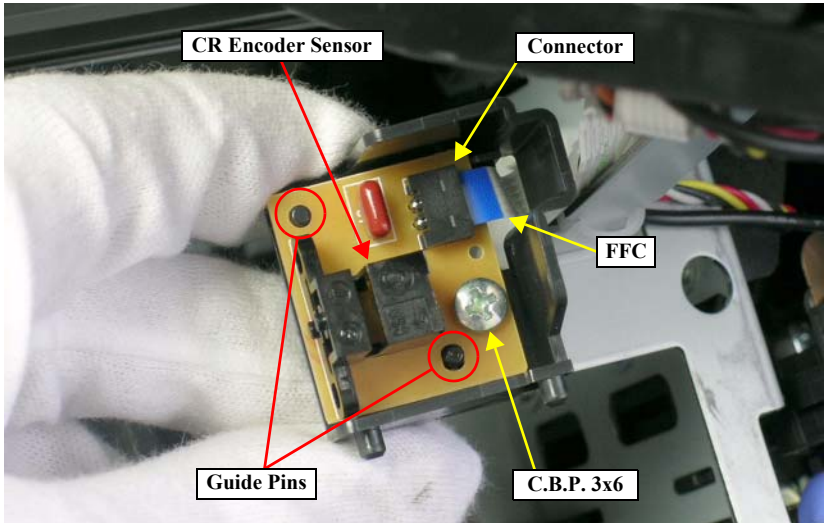

Figure 4-66. Removing the CR Encoder Sensor

4.2.5.6 CUTTER SOLENOID ASSY.

1. Disconnect the connector of the CUTTER SOLENOID ASSY. from the BOARD ASSY, SUB. *See Section 4.2.4.4 on page 236.*
2. Pull out the harness of the CUTTER SOLENOID ASSY. through the notch of the CR BOARD HOLDER. *See Figure 4-67.*
3. Remove the CR ENCODER HOLDER. *See Section 4.2.5.5 on page 246.*
4. Cut the TILAP and release the harness, FFC, and the grounding wire. *See Figure 4-68.*

REASSEMBLY

Secure the following harnesses, FFCs, and the grounding wire with a TILAP at the position shown in the figure. *See Figure 4-68.*

- **CUTTER SOLENOID ASSY. harness**
- **P Edge Sensor harness**
- **CR Encoder Sensor FFC**
- **IM Sensor FFC**
- **Grounding wire (connected between the BOARD ASSY, SUB and the CARRIAGE ASSY.)**

5. Remove the three screws that secure the CUTTER HOLDER ASSY. and remove it. *See Figure 4-68.*
   - Three C.P.S.(S-P2) M3 x 5 screws

REASSEMBLY

Set the two positioning holes of the CUTTER HOLDER ASSY. onto the two guide pins. *See Figure 4-68.*

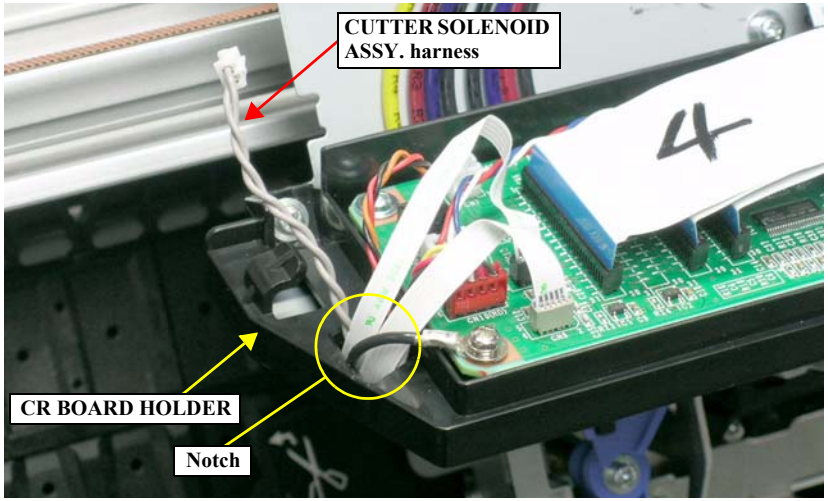

Figure 4-67. Pulling Out the CUTTER SOLENOID ASSY. Harness

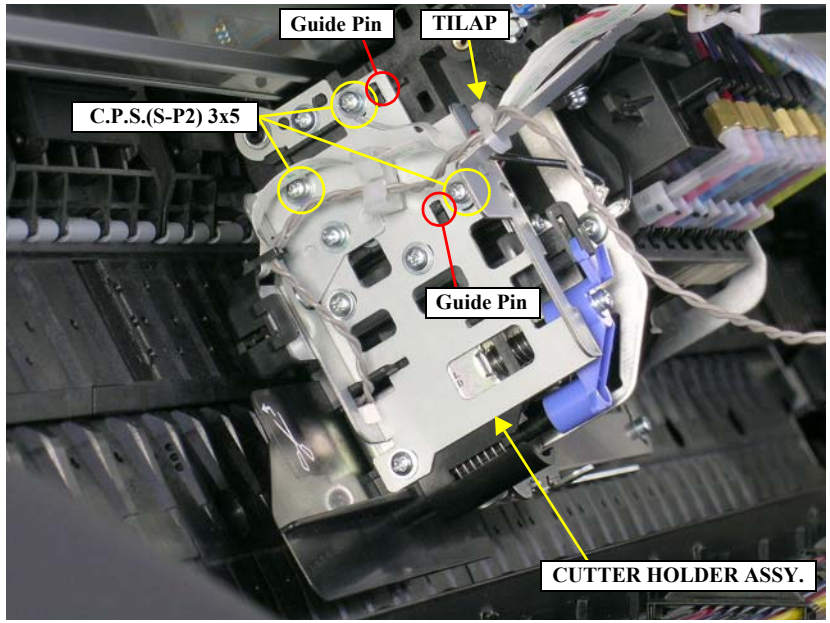

Figure 4-68. Removing the CUTTER HOLDER ASSY.

6. Release the harness of the CUTTER SOLENOID ASSY. from the retaining clip and the hooked tab of the IM Sensor Cover. *See Figure 4-70.*
7. Remove the three screws that secure the CUTTER HOLDER. *See Figure 4-70.*
   - Three C.C.P. M3 x 8 screws
8. Pull out the harness of the CUTTER SOLENOID ASSY. through the notch of the CUTTER HOLDER BRACKET, and remove the CUTTER HOLDER. *See Figure 4-70.*

REASSEMBLY

- **Set the tab and hooked tab of the CUTTER HOLDER into the slots of the frame.**
- **Route the harness of the CUTTER SOLENOID ASSY. through the notch of the hooked tab on the CUTTER HOLDER.**

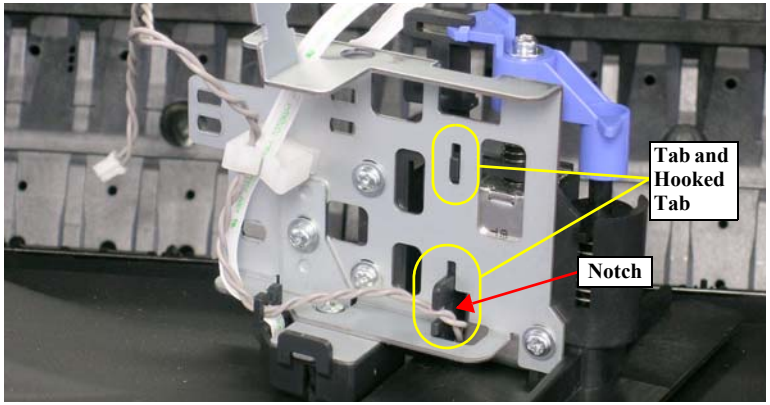

Figure 4-69. Reinstalling the CUTTER HOLDER

9. Remove the Cutter. *See Section 4.2.2.3 on page 218.*
10. Release the hooked tab that secures the CR LOCK KICKER and remove it together with the CUTTER CAP, SOLENOID SPRING, and the SOLENOID SHAFT. *See Figure 4-71.*

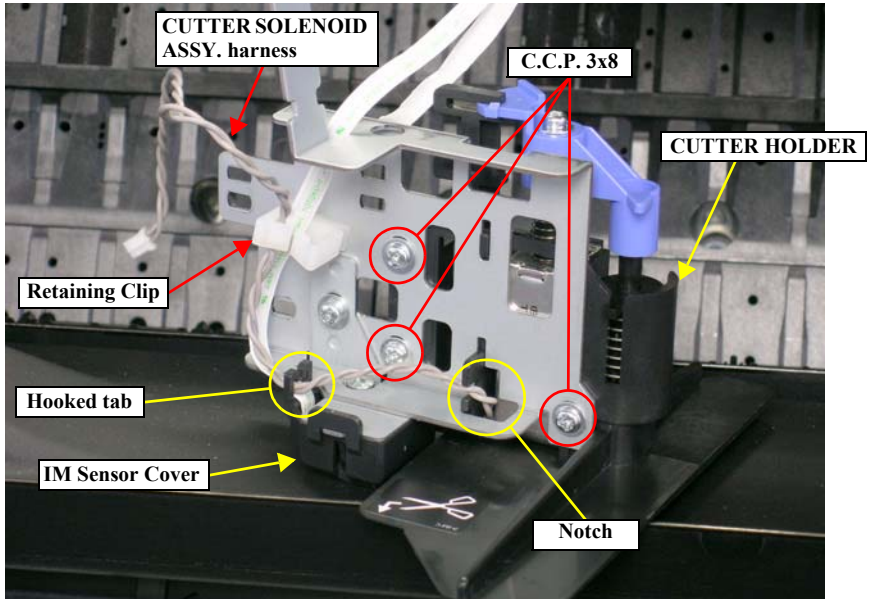

Figure 4-70. Removing the CUTTER HOLDER

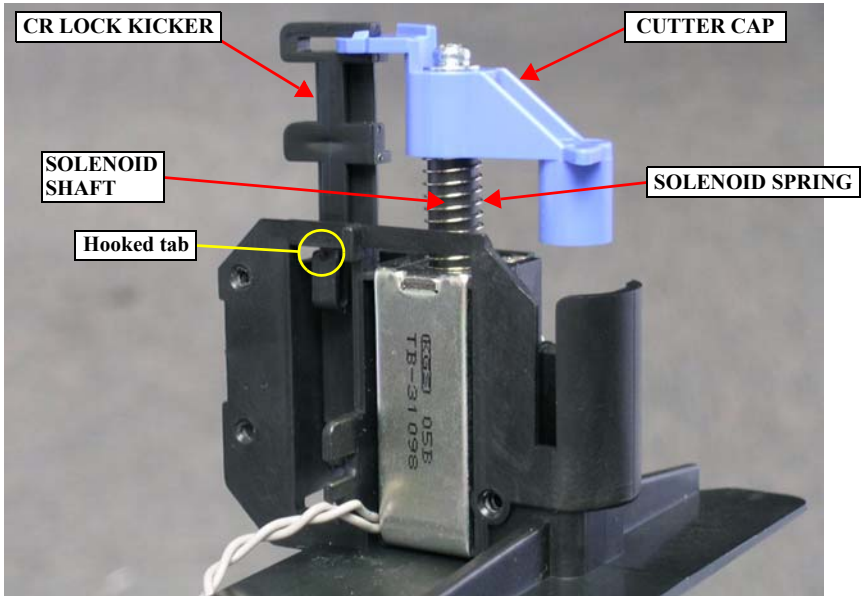

Figure 4-71. Removing the CR LOCK KICKER

11. Remove the two screws that secure the CUTTER SOLENOID ASSY. and remove it.
    - Two C.P.S.(S-P2) M2.6 x 6 screws

ADJUSTMENT REQUIRED

Whenever the CUTTER SOLENOID ASSY. is reinstalled or replaced, the corresponding adjustment must be carried out. ***See Chapter 5 on page 292.***

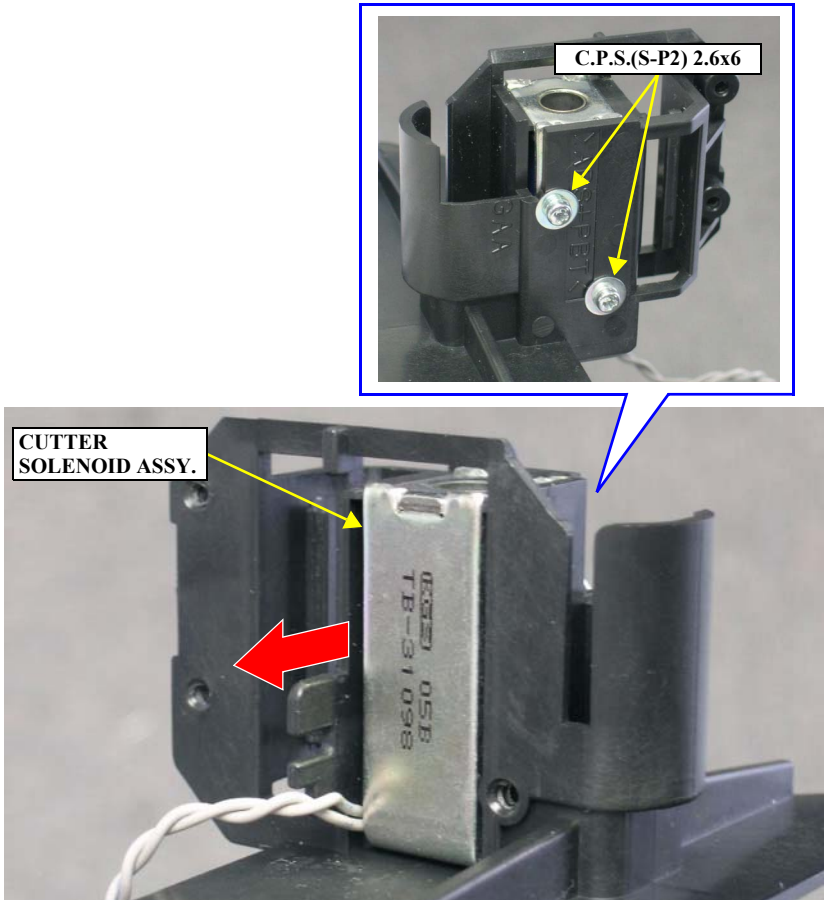

Figure 4-72. Removing the CUTTER SOLENOID ASSY.

4.2.5.7 SCALE, CR

1. Remove the L Side Cover Assy. *See Section 4.2.3.5 on page 224.*
2. Unlock the CARRIAGE ASSY. and move the unit to the center. *See Section on page 215.*

CAUTION

When performing the following steps, be careful not to touch the SCALE, CR with bare hands or get it soiled with ink. Also be extremely careful not to scratch it by, for example, hitting it against frames. Any dirt or scratches on the SCALE, CR may cause a malfunction of the CR Encoder Sensor.

3. Remove the CR SCALE SPRING from the notch of the frame, and remove the spring from the hole of the SCALE, CR.
4. Release the SCALE, CR from the hooked tab each on the three SCALE CENTER GUIDE C, and carefully pull out the SCALE, CR rightward from the inner side of the CARRIAGE ASSY.

CHECK POINT

When removing the SCALE, CR of the Stylus Pro 7400/7800, release it from a hooked tab on the left SCALE CENTER GUIDE C, then follow the same procedure described above.

5. Release the right edge of the SCALE, CR from the hooked tab on the frame, and pull out the SCALE, CR from the FENCE GUIDE R.

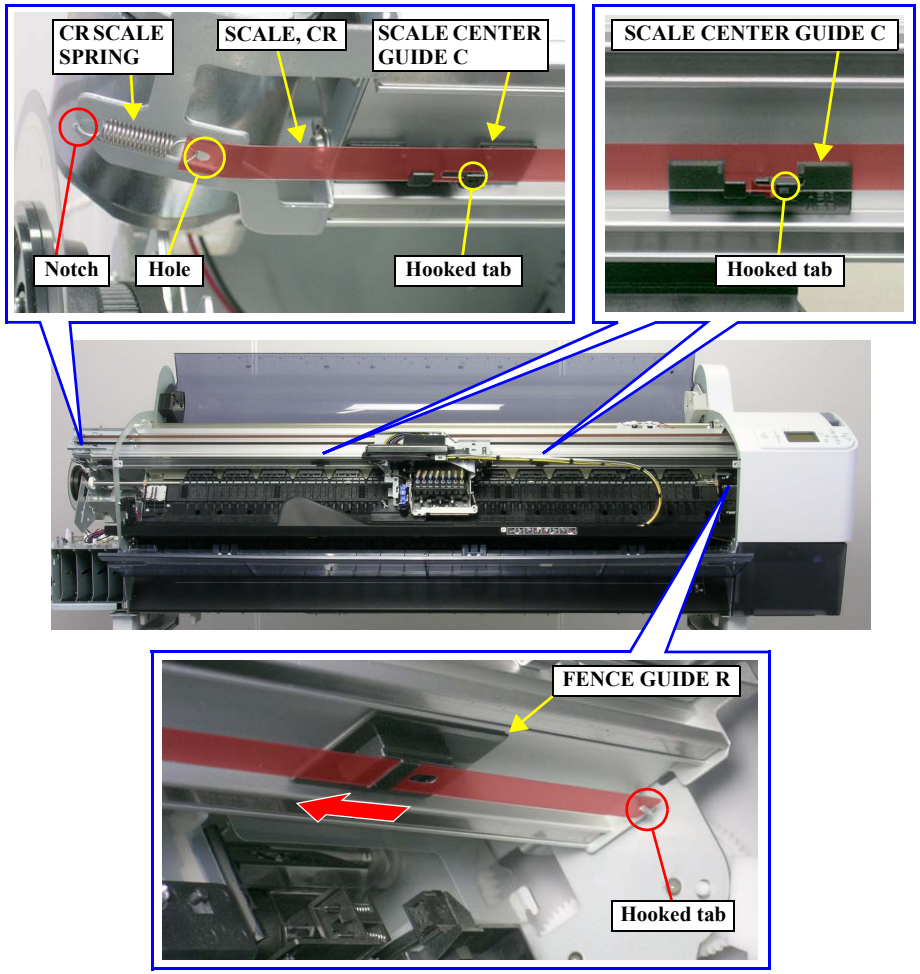

Figure 4-73. Removing the SCALE, CR

4.2.6 Removing the Paper Feed Mechanism

4.2.6.1 VACUUM FAN ASSY.

1. Remove the P GUIDE L ASSY. *See Section 4.2.3.7 on page 227.*
2. Remove the FRONT COVER ASSY. *See Section 4.2.3.9 on page 230.*

CAUTION

When performing the next step, use a screwdriver whose length is shorter than 15 cm.

3. Remove the screw that secures the TUBE COVER. *See Figure 4-74.*
   - One C.P.S.(S-P2) M3 x 8 screw
4. Slide the TUBE COVER leftward to release it from the two hooked tabs, and remove the TUBE COVER. *See Figure 4-74.*

CAUTION

When reinstalling the TUBE COVER, be careful not to trap TUBE, SUPPLY, INK under the cover.

5. Release the two hooked tabs on each of the seven PAPER OUTLET ROLLER Assies, and remove them. *See Figure 4-75.*

CHECK POINT

The Stylus Pro 7400/7800 have four PAPER OUTLET ROLLER Assies.

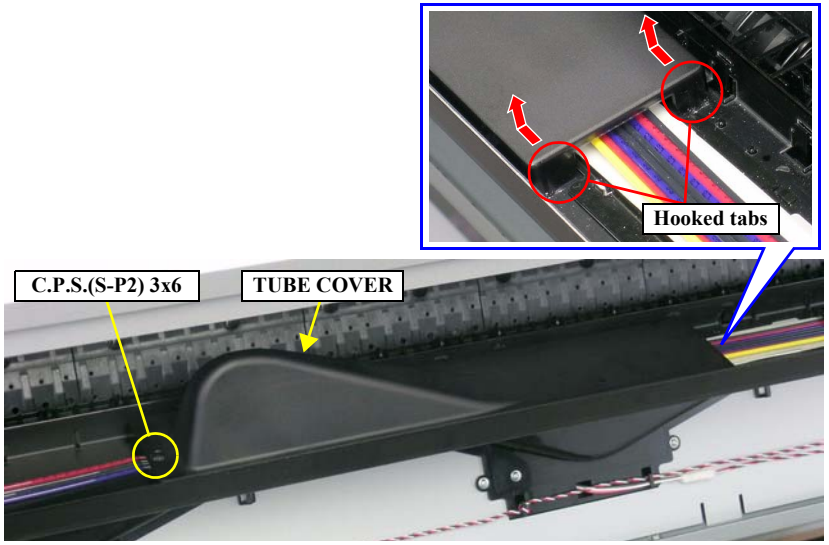

Figure 4-74. Removing the TUBE COVER

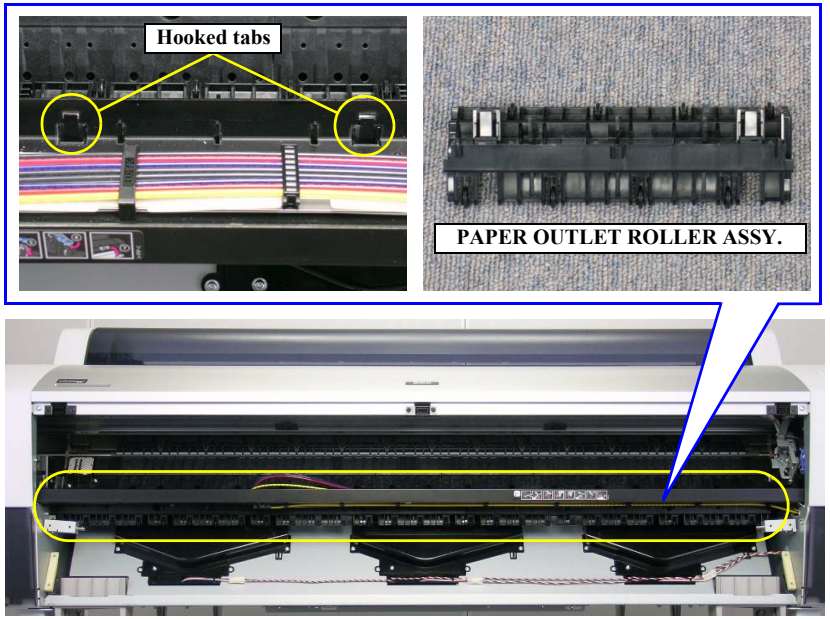

Figure 4-75. Removing the PAPER OUTLET ROLLER ASSY.

6. Remove the screw that secures each of the two SEAL, HOLDs, and remove them. *See Figure 4-77.*
   - Two C.C.S. M3 x 8 screws

CHECK POINT

The SEAL, HOLD is not included in the Stylus Pro 7400/7800.

7. Disconnect the three connectors of the VACUUM FAN ASSY. from the relay connectors. *See Figure 4-78.*
8. Release the two relay harnesses from the five retaining clips (two clips on the center, and three clips on the right side) of the VACUUM FAN ASSY. *See Figure 4-78.*

REASSEMBLY

Route the two relay harnesses as shown in the figure below.

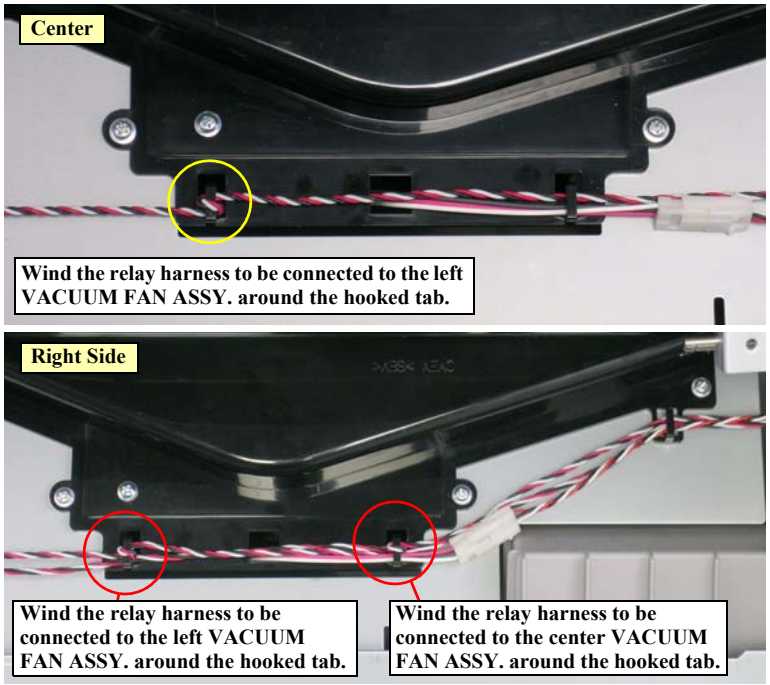

Figure 4-76. Releasing the Relay Harnesses

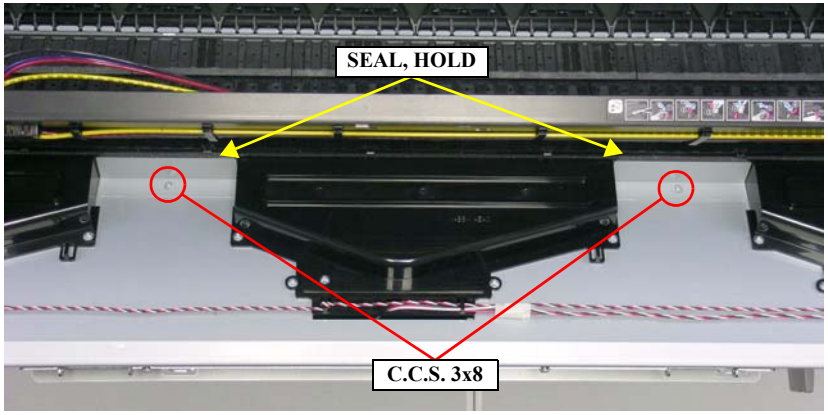

Figure 4-77. Removing the SEAL, HOLD

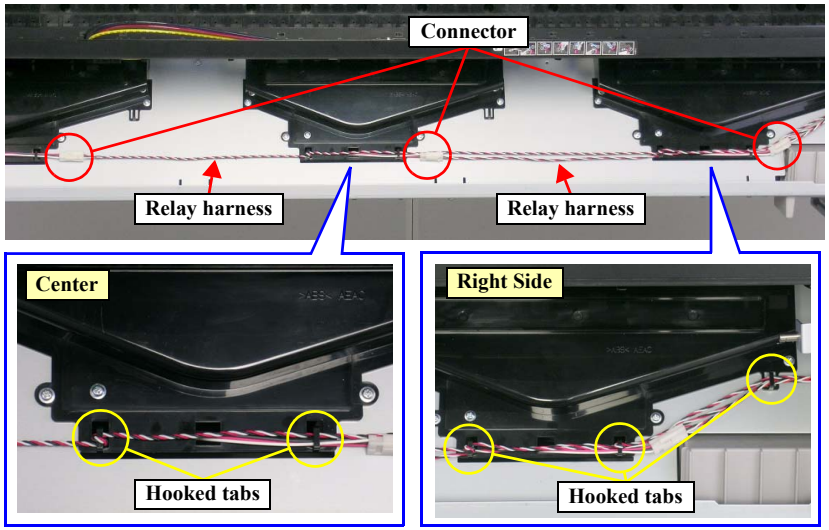

Figure 4-78. Releasing the Relay Harnesses

9. Remove the four screws that secure each of the three VACUUM FAN Assies. *See Figure 4-79.*
   - 12 (4 pcs. x 3) C.C.S. M3 x 8 screws
10. To remove the left and right VACUUM FAN Assies, pull them toward you and then downward as far as they go to pull out their rear, and raise the rear toward you without raising the front to remove them from the rear. *See Figure 4-80.*
11. Pull the right VACUUM FAN ASSY. downward and pull out its rear toward you. *See Figure 4-81.*
12. Turn the FRONT COVER, HINGE, R toward the inner side to release the right side of the right VACUUM FAN ASSY., and then raise the rear of the assy. toward you to remove it from the rear. *See Figure 4-81.*

CHECK POINT

The Stylus Pro 7400/7800 have two VACUUM FAN Assies.

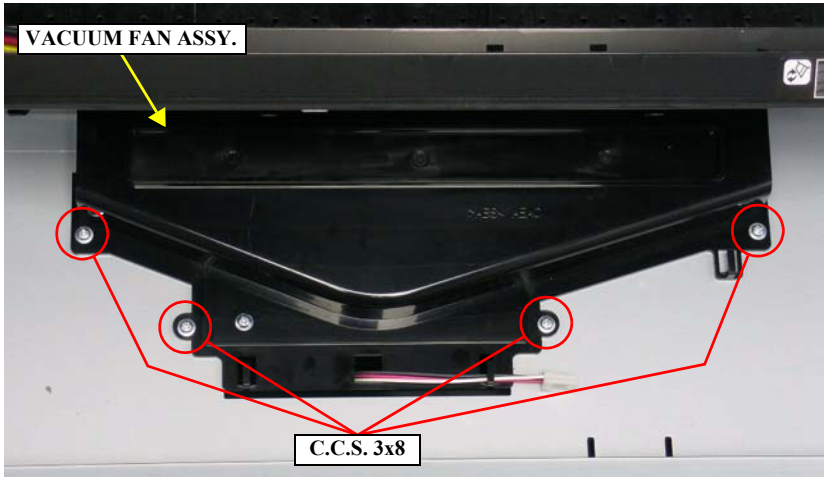

Figure 4-79. Screws Securing the VACUUM FAN ASSY.

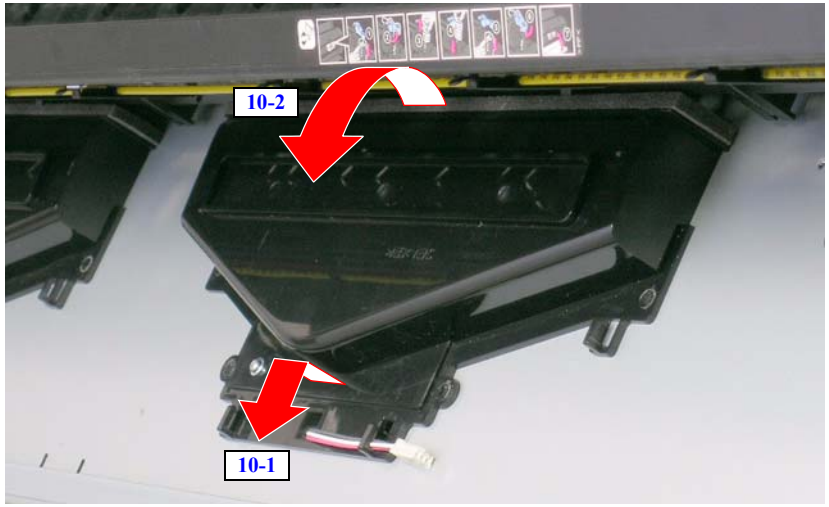

Figure 4-80. Removing the Left and Center VACUUM FAN Assies

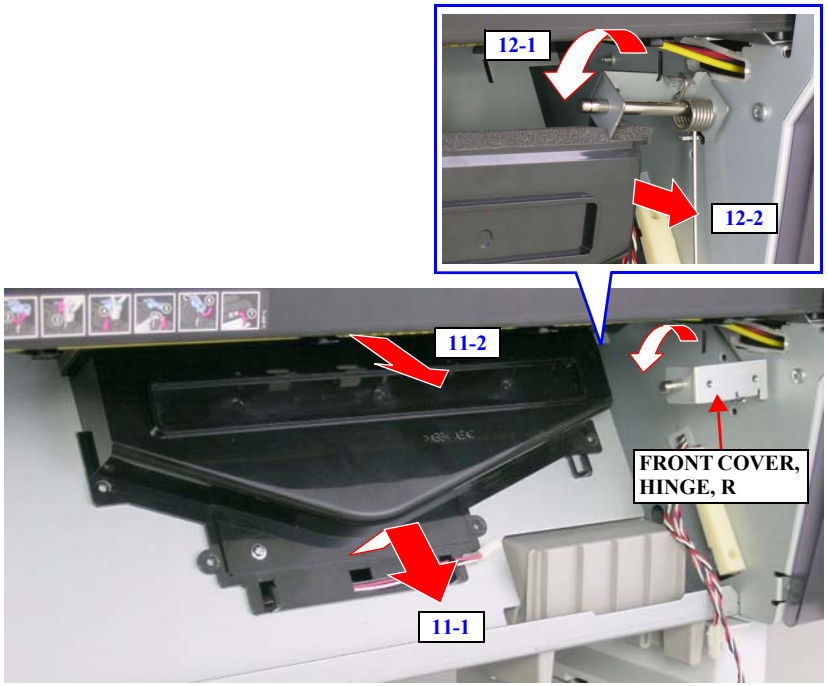

Figure 4-81. Removing the Right VACUUM FAN ASSY.

4.2.6.2 PF MOTOR ASSY.

1. Remove the L Side Cover Assy. *See Section 4.2.3.5 on page 224.*

CAUTION

When performing the next step, be careful not to deform or damage the SCALE, PF. *See Figure 4-83.*

2. Remove the three screws that secure the PF ENC COVER B. *See Figure 4-82.*
   - Three C.B.P. M3 x 8 screws
3. Release the three tabs that secure the PF ENC COVER B and remove it. *See Figure 4-82.*
4. Disconnect the connector of the PF Encoder Sensor from the BOARD ASSY., SUB; C. *See Figure 4-83.*
5. Remove the two screws that secure the PF Encoder Mounting Plate and remove it. *See Figure 4-83.*
   - Two C.P.S.(S-P2) M3 x 8 screws

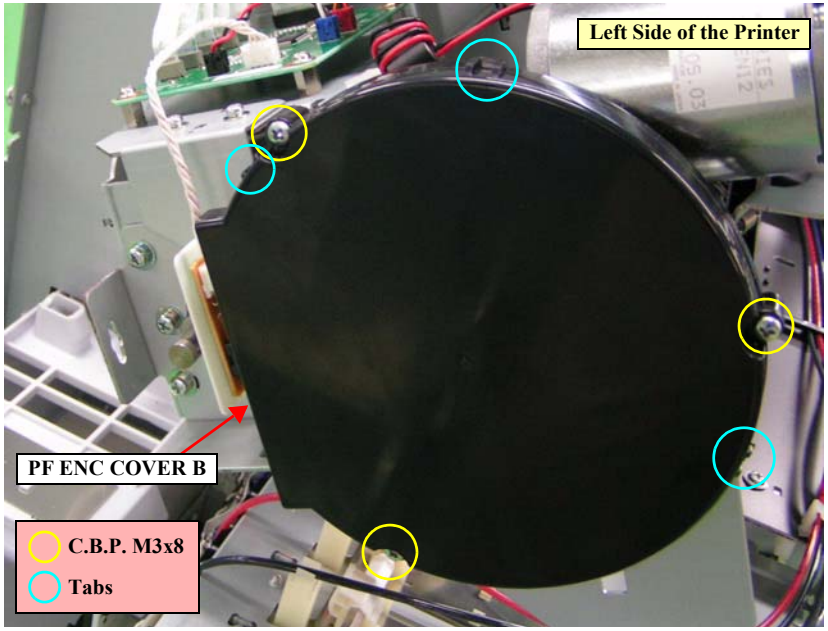

Figure 4-82. Removing the PF ENC COVER B

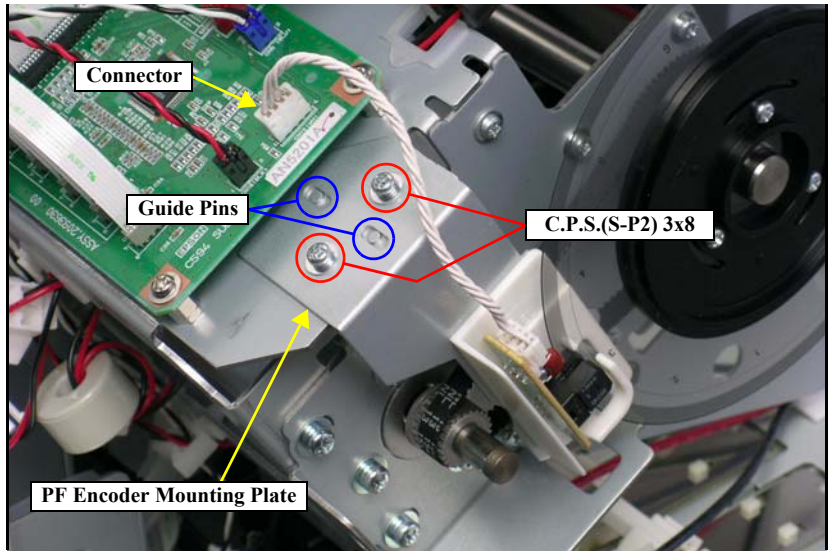

Figure 4-83. Removing the PF Encoder Mounting Plate

- **Set the two positioning holes of the PF Encoder Mounting Plate onto the two guide pins.** ***See Figure 4-83.***
- **After installing the PF Encoder Mounting Plate, make sure that the SCALE, PF is properly inserted into the slit of the PF Encoder Sensor.**

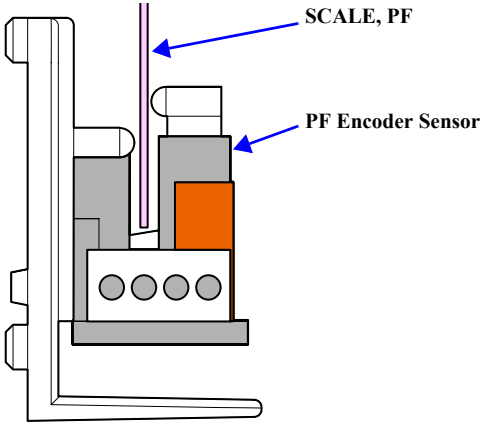

Figure 4-84. Reinstalling the PF Encoder Mounting Plate

- **Before screwing the SCALE, PF, adjust its position to the center of the slit so that the scale does not contact with the sensor.**

6. Disconnect the connector of the PF MOTOR ASSY. from the relay connector, and release the PF MOTOR ASSY. harness from the retaining clip. *See Figure 4-85.*
7. Remove the four screws that secure the PF Motor Mounting Plate. *See Figure 4-85.*
   - Four C.P.S.(S-P2) M4 x 8 screws
8. Release the hooked tab of the PF Motor Mounting Plate, remove the X REDUCTION BELT from the pinion gear of the PF MOTOR ASSY., and then remove the PF Motor Mounting Plate together with the PF MOTOR ASSY. *See Figure 4-86.*

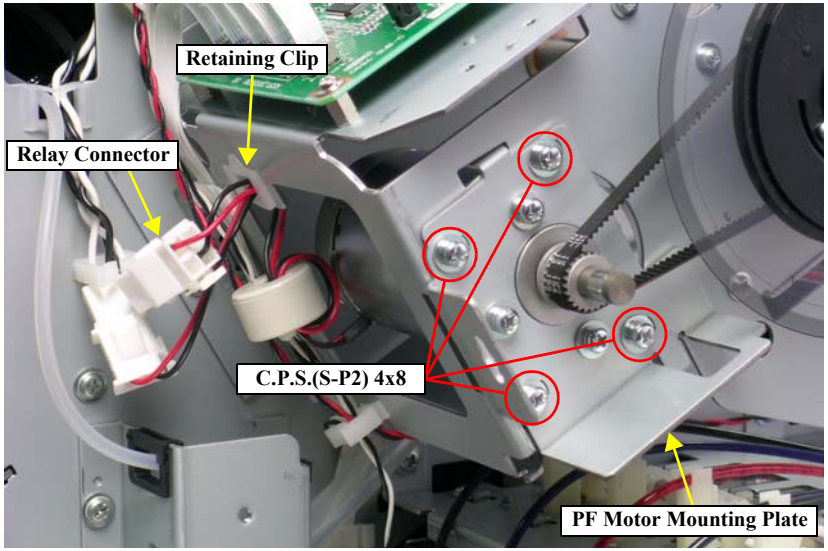

Figure 4-85. Screws Securing the PF Motor Mounting Plate

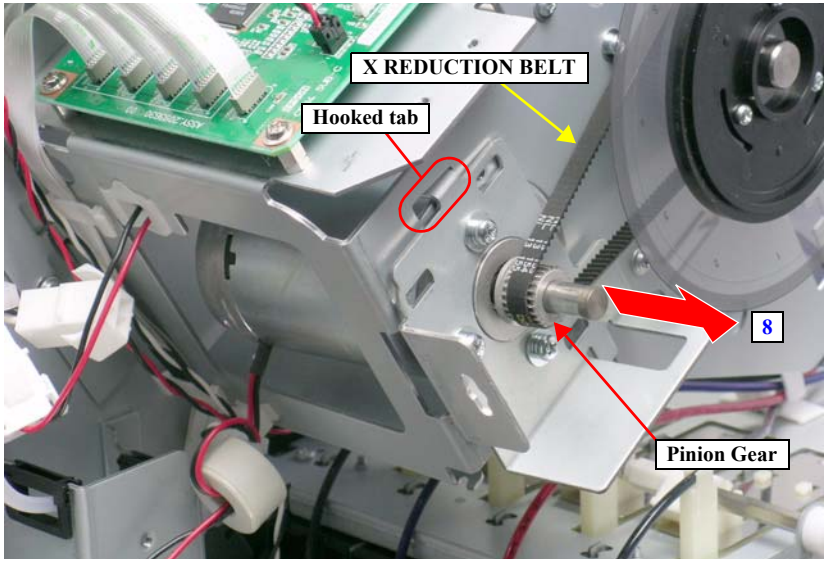

Figure 4-86. Removing the PF Motor Mounting Plate

9. Remove the three screws that secure the PF MOTOR ASSY. and remove it. *See Figure 4-87.*
   - Three C.P.S.(S-P2) M4 x 8 screws

REASSEMBLY

Reinstall the PF MOTOR ASSY. so that the harness outlet of the assy. faces toward the rear side of the printer. *See Figure 4-87.*

ADJUSTMENT REQUIRED

Whenever the PF MOTOR ASSY. is reinstalled or replaced, the corresponding adjustment must be carried out. See Chapter 5 on page 292.

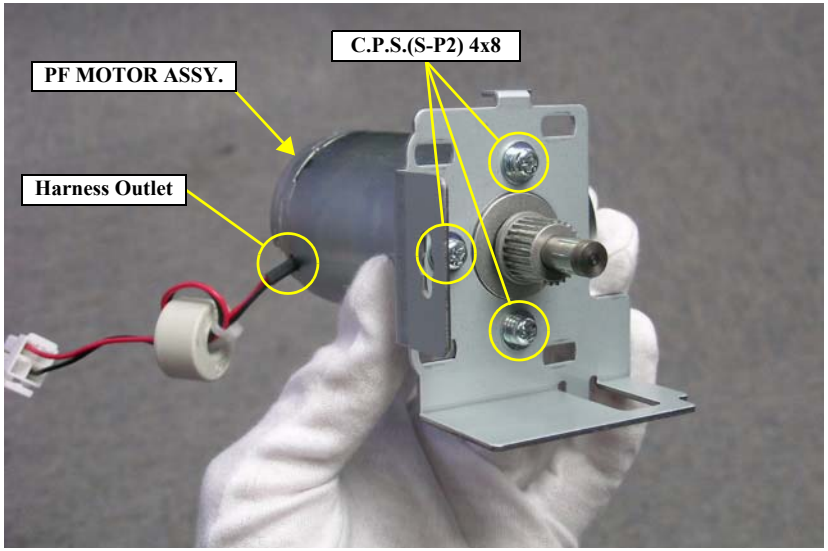

Figure 4-87. Removing the PF MOTOR ASSY.

4.2.6.3 PF Encoder Sensor

1. Remove the L SIDE COVER ASSY. *See Section 4.2.3.5 on page 224.*

CAUTION

When removing the SCALE, PF, be careful not to deform or damage it. *See Figure 4-89.*

2. Remove the three screws that secure the PF ENC COVER B. *See Figure 4-88.*
   - Three C.B.S. M3 x 8 screws
3. Release the three tabs that secure the PF ENC COVER B and remove it. *See Figure 4-88.*

CAUTION

When removing the PF Encoder Sensor, be careful not to bend the capacitor on the sensor. *See Figure 4-89.*

4. Remove the connector from the PF Encoder Sensor. *See Figure 4-89.*
5. Remove the two screws that secure the PF Encoder Sensor and remove it. *See Figure 4-89.*
   - Two C.P.P. M2.6 x 6 screws

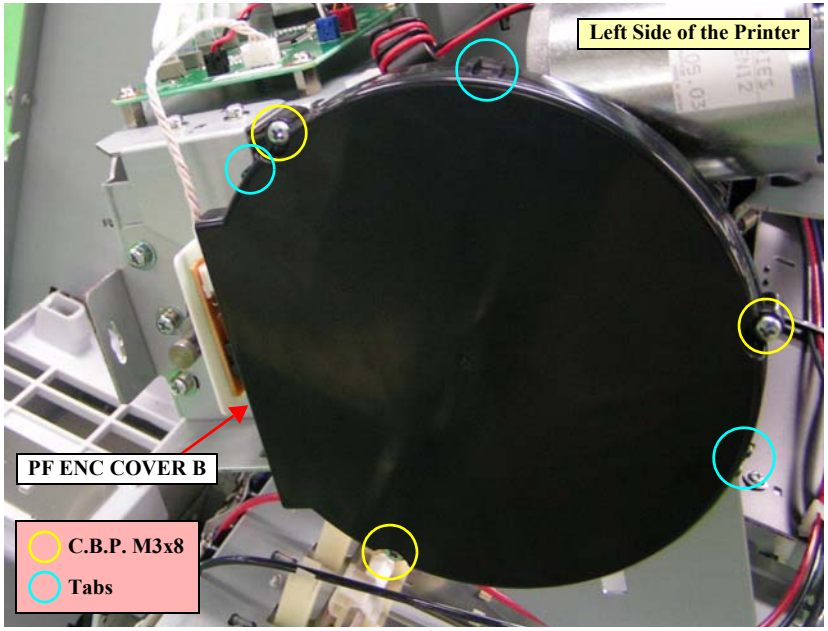

Figure 4-88. Removing the PF ENC COVER B

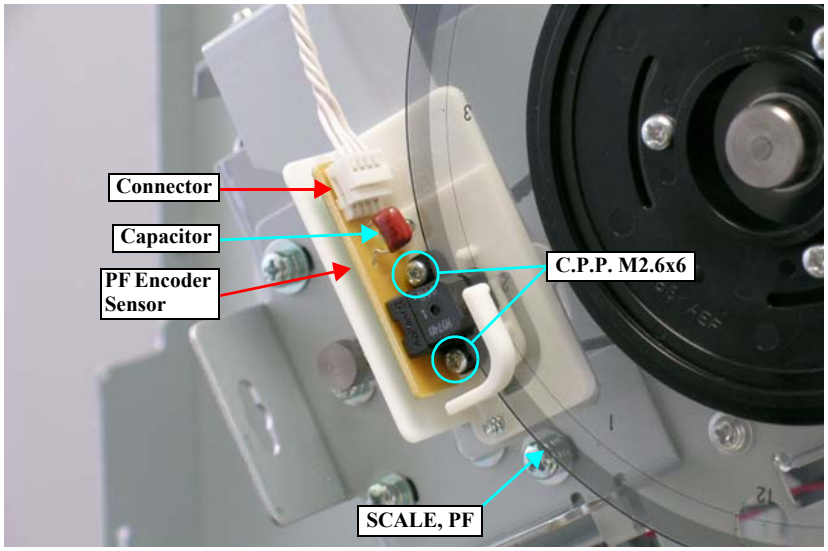

Figure 4-89. Removing the PF Encoder Sensor

REASSEMBLY

- Make sure that the two positioning pins on the PF Encoder Sensor match up with the positioning holes on the holder.

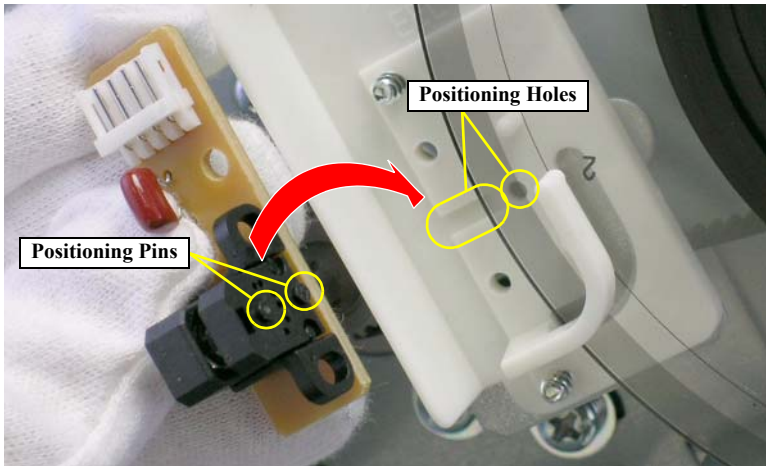

Figure 4-90. Reinstalling the PF Encoder Sensor (1)

- When reinstalling the PF Encoder Sensor, check that the SCALE, PF is positioned correctly: between the sides of the Sensor, but not touching either side.

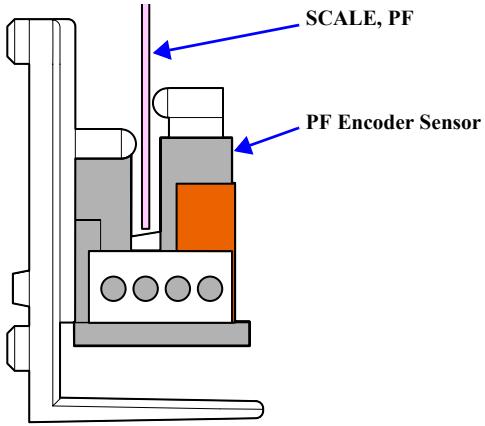

Figure 4-91. Reinstalling the PF Encoder Sensor (2)

- Make sure that the SCALE, PF is not touching either side of the Sensor.

ADJUSTMENT REQUIRED

Whenever the PF Encoder Sensor is reinstalled or replaced, the corresponding adjustment must be carried out. See Chapter 5 on page 292.

4.2.6.4 SCALE, PF

1. Remove the PF Encoder Mounting Plate. *See Section 4.2.6.2 on page 255.*
2. Remove the three screws that secure the PF Encoder Retainer and remove it together with the SCALE, PF.
   - Three C.C.P. M3 x 6 screws

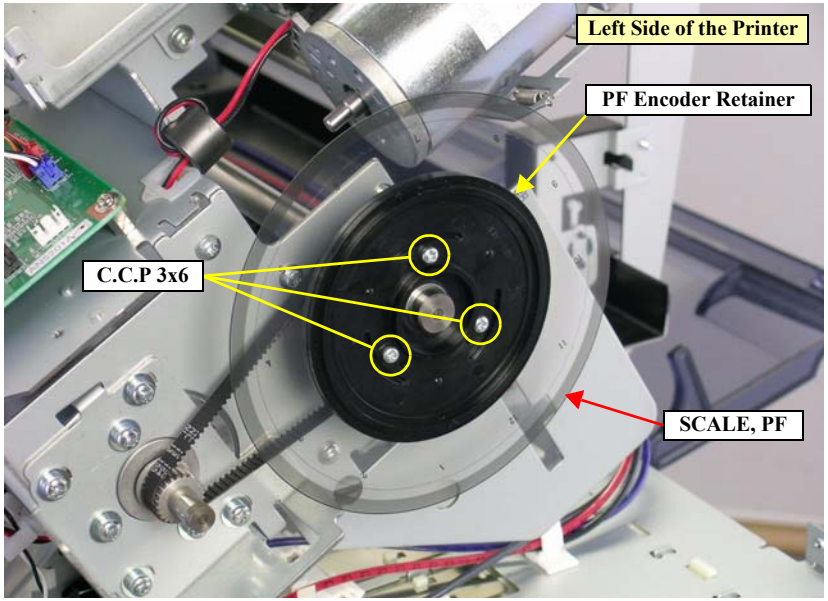

Figure 4-92. Removing the SCALE, PF

4.2.6.5 P Thick1 Sensor, P Thick2 Sensor

1. Remove the H TOP COVER ASSY. *See Section 4.2.3.2 on page 221.*
2. Remove the screw that secures the P Thick Sensor Mounting Plate and remove it. *See Figure 4-93.*
   - One C.C.S. M3 x 8 screw

REASSEMBLY

When reinstalling the P Thick Sensor Mounting Plate, make sure the two guide pins on the Mounting Plate are set in the mounting holes. *See Figure 4-93.*

3. Release the three tabs that secure each of the P Thick1 Sensor and the P Thick2 Sensor and remove the two Sensors. *See Figure 4-94.*
4. Remove the connector both from the P Thick1 Sensor and the P Thick2 Sensor. *See Figure 4-94.*

ADJUSTMENT REQUIRED

Whenever either or both of the P Thick1 Sensor and the P Thick2 Sensor is/are reinstalled or replaced, the corresponding adjustment must be carried out. See Chapter 5 on page 292.

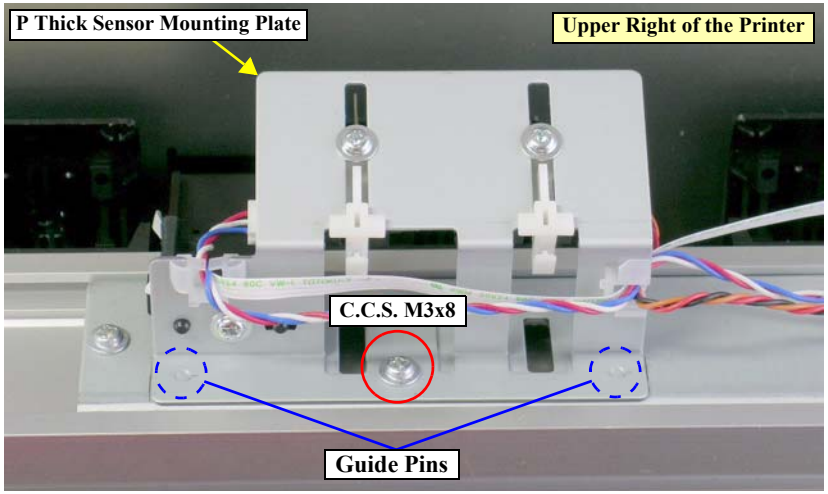

Figure 4-93. Screws Securing the P Thick Sensor Mounting Plate

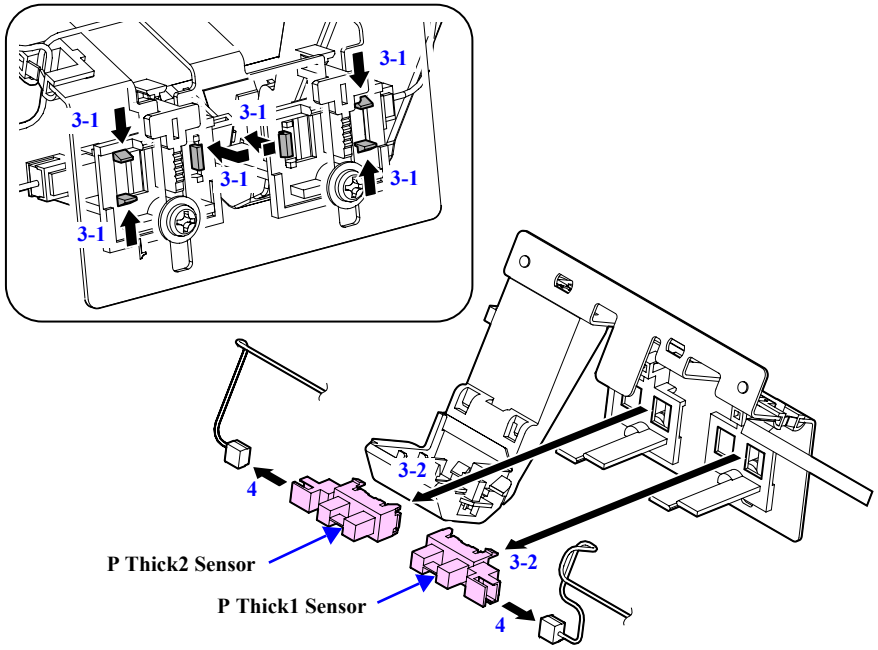

Figure 4-94. Removing the P Thick1 Sensor and P Thick2 Sensor

4.2.6.6 P Rear Sensor

1. Remove the P Thick Sensor Mounting Plate. *See Section 4.2.6.5 on page 261.*
2. Disconnect the FFC from the connector.
3. Release the two tabs that secure the P Rear Sensor and remove it.

ADJUSTMENT REQUIRED

Whenever the P Rear Sensor is reinstalled or replaced, the corresponding adjustment must be carried out. ***See Chapter 5 on page 292.***

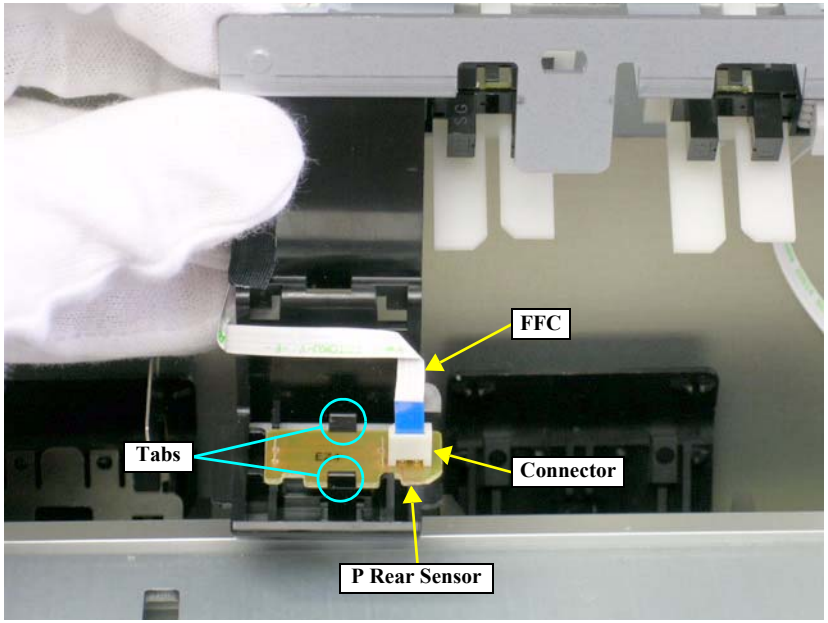

Figure 4-95. Removing the P Rear Sensor

4.2.6.7 IM (Ink Mark) Sensor

1. Remove the L SIDE COVER ASSY. *See Section 4.2.3.5 on page 224.*
2. Unlock the CARRIAGE ASSY. and move the unit to the center. *See Section 4.2.1.2 on page 215.*
3. Release the FFC and harnesses from the retaining clip on the IM SENSOR COVER. *See Figure 4-96.*
4. Remove the screw that secures the IM SENSOR HOLDER. *See Figure 4-96.*
   - One C.P.S.(S-P2) M3 x 5 screw

REASSEMBLY

When reinstalling the IM Sensor Holder, make sure the two guide pins on the Holder are set in the positioning holes. *See Figure 4-96.*

5. Move the CARRIAGE ASSY. to the left while holding the IM Sensor Holder with your fingers so that it does not touch the Platen.
6. Pull the IM Sensor Holder out through the hole on the bracket. *See Figure 4-97.*
7. Remove the screw that secures the IM Sensor Holder and remove it. *See Figure 4-97.*
   - One C.B.P. M3 x 6 screw

REASSEMBLY

When reinstalling the IM Sensor Holder, make sure the positioning tab of the Holder is set in the positioning slot on the IM SENSOR COVER. *See Figure 4-97.*

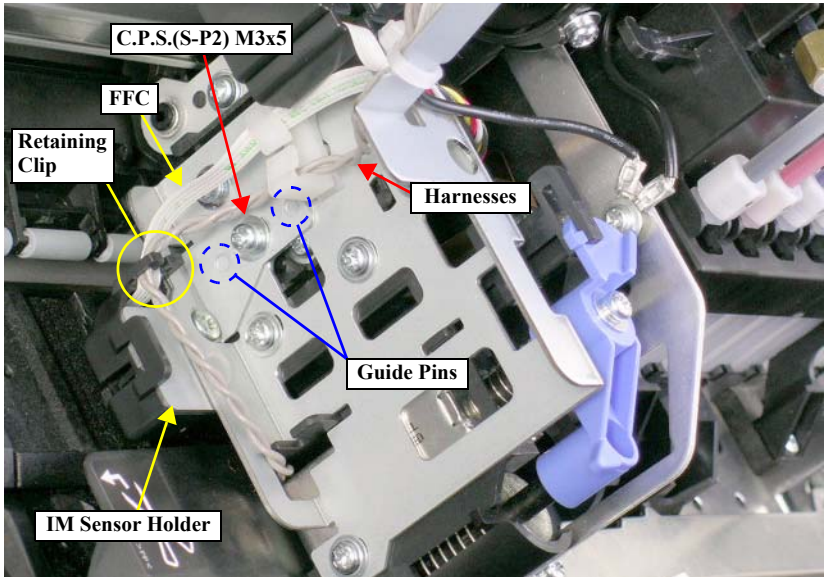

Figure 4-96. Screw Securing the IM Sensor Holder

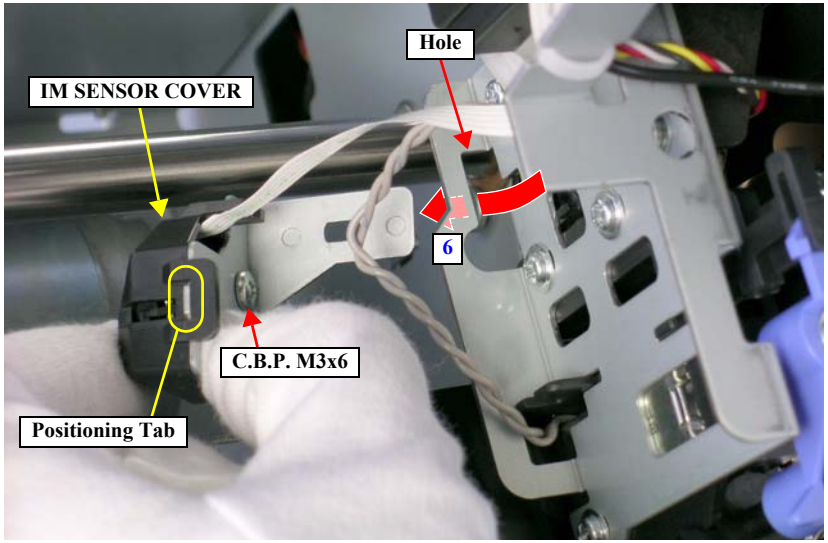

Figure 4-97. Removing the IM Sensor Holder

8. Remove the screw that secures the IM Sensor and remove it.
   - One C.P.P. M1.4 x 5 screw

REASSEMBLY

Put the protrusion of the IM Sensor into the hole located under the tab.

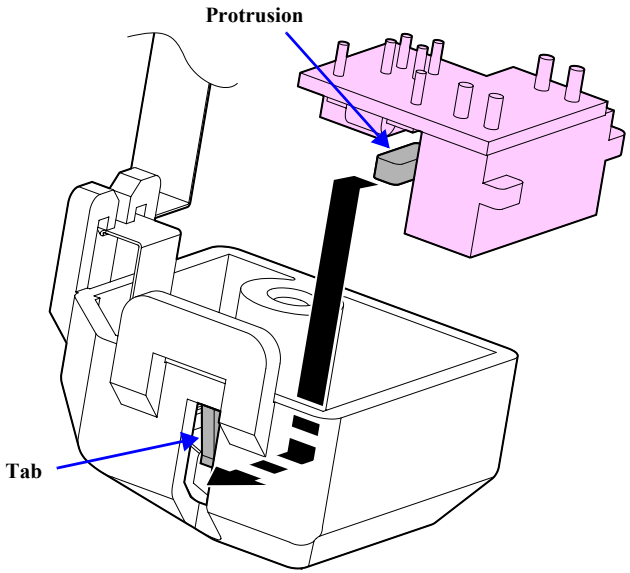

Figure 4-98. Reinstalling the IM Sensor

9. Disconnect the FFC from the connector.

ADJUSTMENT REQUIRED

Whenever the IM Sensor is reinstalled or replaced, the corresponding adjustment must be carried out. ***See Chapter 5 on page 292.***

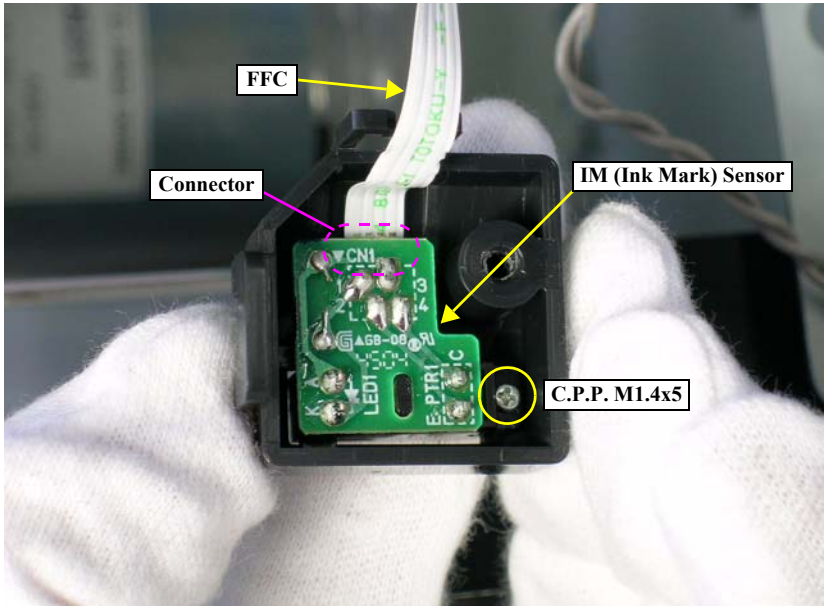

Figure 4-99. Removing the IM Sensor

4.2.6.8 P Edge Sensor

1. Disconnect the connector of the P Edge Sensor from the BOARD ASSY., SUB. *See Section 4.2.4.4 on page 236.*
2. Pull out the harness of the P Edge Sensor through the notch of the CR BOARD HOLDER, and release the harness from the retaining clip.*See Figure 4-100.*
3. Remove the CUTTER HOLDER ASSY. *See Section 4.2.5.6 on page 248.*
4. Remove the screw that secures the Edge Sensor Holder and remove it. *See Figure 4-101.*
   - One C.C.P. M3 x 8 screw

REASSEMBLY

Set the two guide pins of the Edge Sensor Holder in the positioning holes. *See Figure 4-101.*

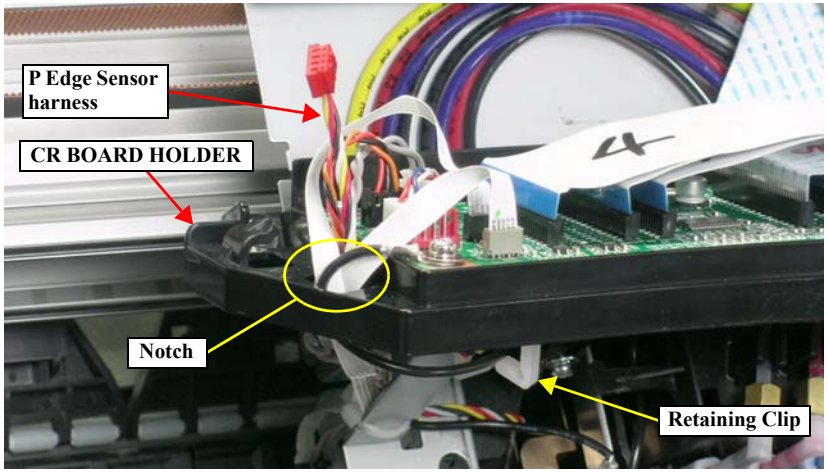

Figure 4-100. Releasing the P Edge Sensor Harness

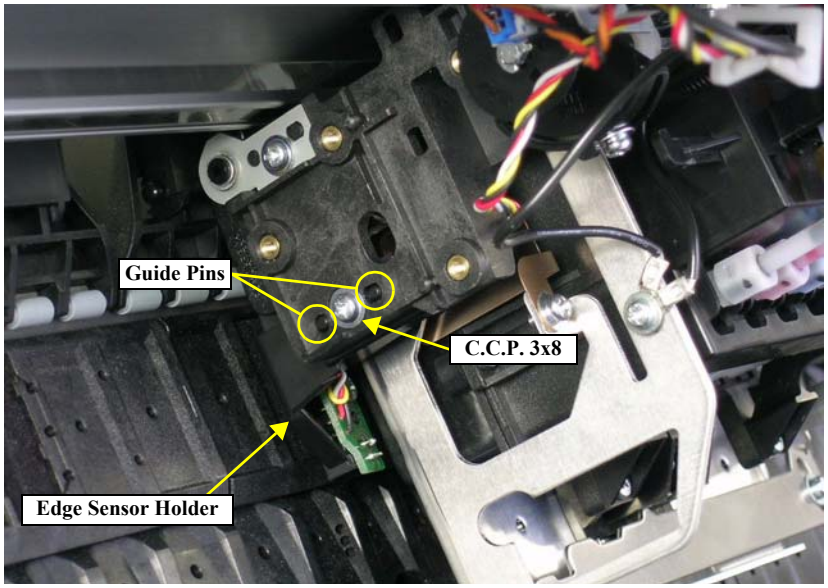

Figure 4-101. Removing the Edge Sensor Holder

5. Cut the cable tie and release the P Edge Sensor harness.
6. Remove the screw that secures the P Edge Sensor and remove it.
   - One C.B.P. M3 x 6 screw

REASSEMBLY

Set the positioning hole of the P Edge Sensor onto the guide pin. ***See Figure 4-102.***

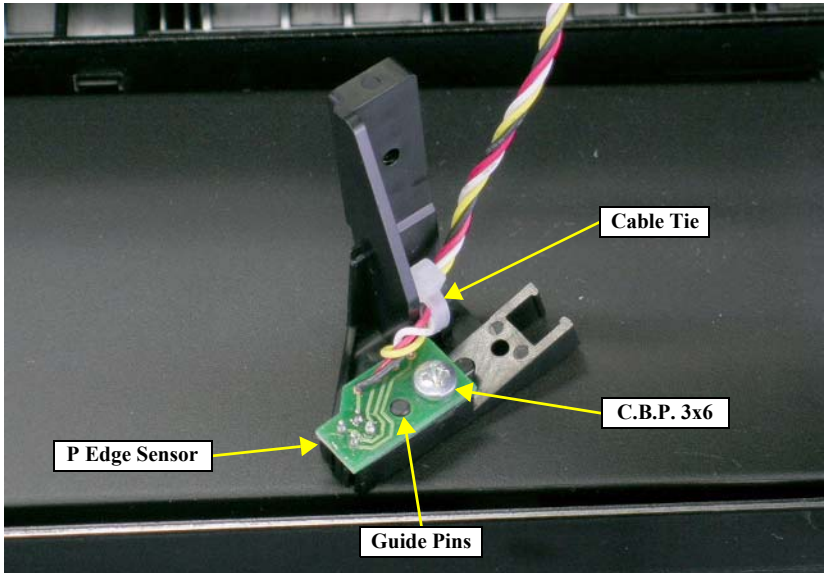

Figure 4-102. Removing the P Edge Sensor

4.2.7 Removing the Ink System Mechanism

4.2.7.1 PRINT HEAD

1. Remove the H TOP COVER ASSY. *See Section 4.2.3.2 on page 221.*
2. Unlock the CARRIAGE ASSY. and move the unit to the center. *See Section 4.2.1.2 on page 215.*
3. Remove the two screws that secure the Damper Unit.
   - Two C.B.S. M3 x 10 screws
4. Remove the screw that secures the HEAD FG PLATE; C.
   - One C.P.S.(S-P2) M3 x 8 screw
5. Pull the Damper Unit toward you and pull the tab out of the hole and remove the Damper Unit.

REASSEMBLY

- **When reinstalling the Damper Unit, make sure the two guide pins on the Unit are set in the positioning holes.**
- **Make sure that the Damper Unit is in close contact with the HOLDER, HEAD (PRINT HEAD) before screwing the Unit.**

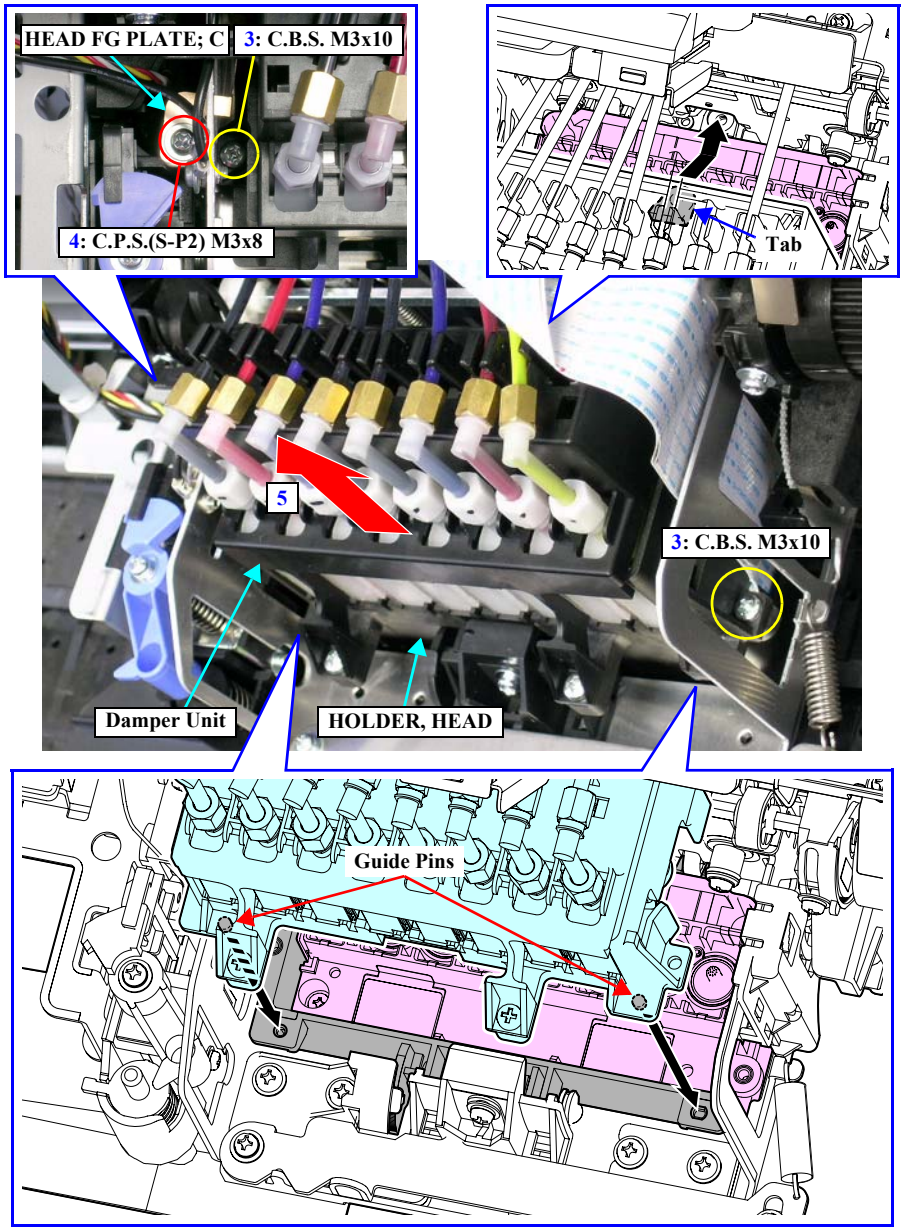

Figure 4-103. Removing the Damper Unit

6. Put the left retaining hook of the Damper Unit on the hole on the left bottom of the CR COVER ASSY. to hang the Unit on the Assy. *See Figure 4-104.*
7. Loosen the right screw and remove the left screw that secure the HEAD FIXING PLATE. *See Figure 4-105.*
   - Two C.P.S.(S-P2) M3 x 6 screws
8. Release the HEAD FIXING PLATE from the tab and slide the right side of the Plate toward you. *See Figure 4-105.*

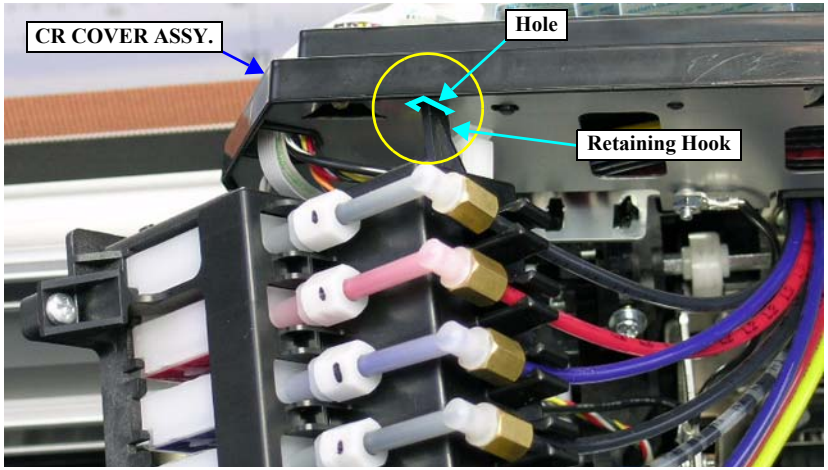

Figure 4-104. Hanging the Damper Unit

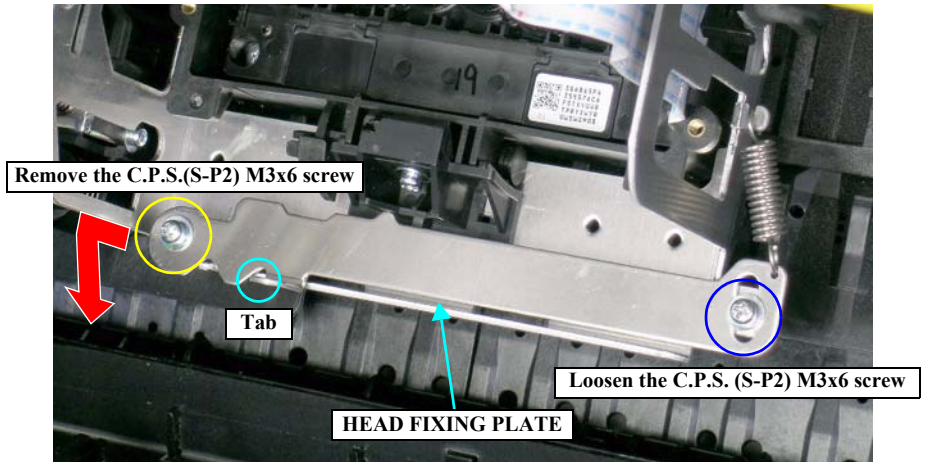

Figure 4-105. Releasing the HEAD FIXING PLATE

CAUTION

When removing the PRINT HEAD, be careful not to touch and damage the nozzles and Ink Supply Needles.

9. Slide the HOLDER, HEAD downward and then pull it toward you releasing the two lower tabs and one upper tab and pulling out the two rails. And remove the HOLDER, HEAD while being careful not to let the HEAD FG PLATE; C contact with the frame.

REASSEMBLY

- **Insert the two rails of the HOLDER, HEAD under the two ball bearings.**
- **Make sure the positioning tab is set in the upper left groove of the HOLDER, HEAD.**

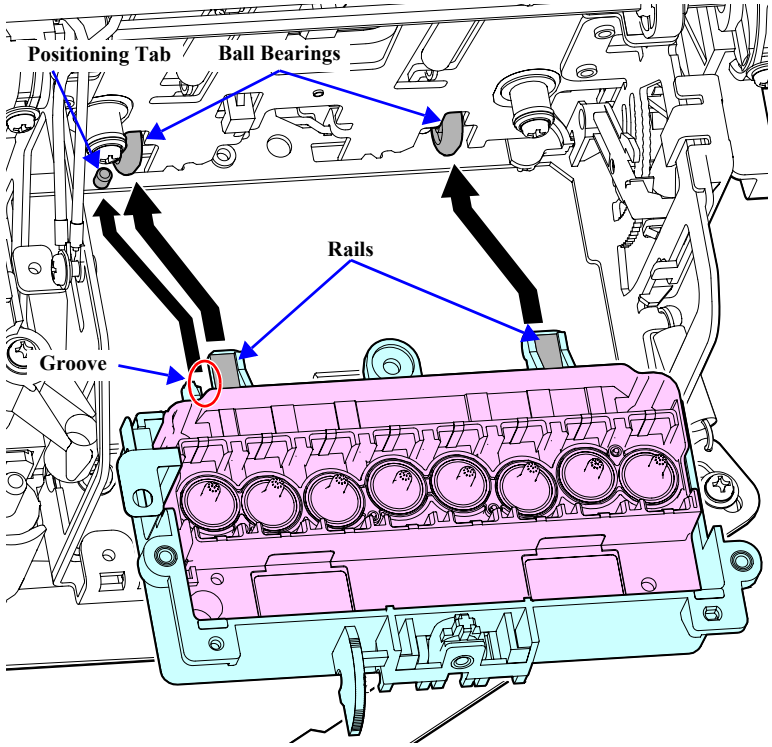

Figure 4-106. Reinstalling the HOLDER, HEAD

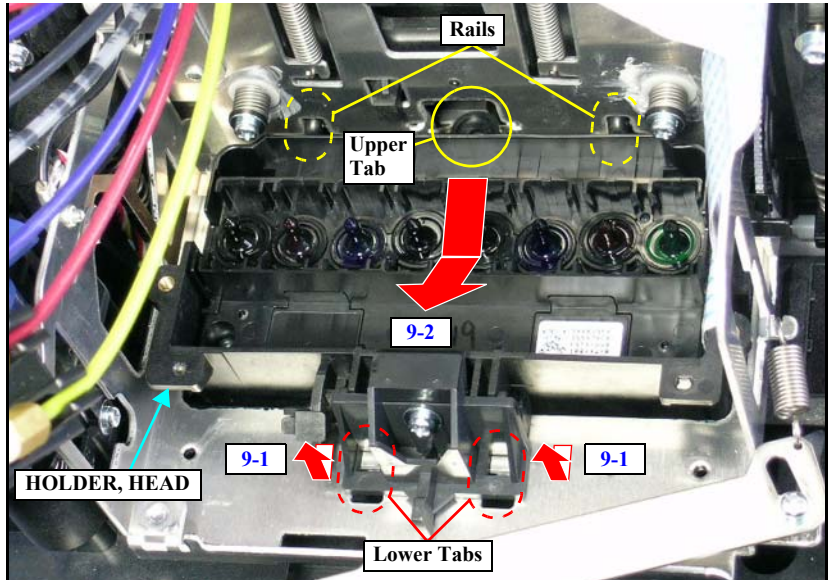

Figure 4-107. Removing the HOLDER, HEAD

10. Remove the three screws that secure the PRINT HEAD and remove it. *See Figure 4-109.*
    - Three C.B.P. M2.6 x 6 screws

REASSEMBLY

When removing the PRINT HEAD, the ABSORBER, CR may come off the HOLDER, HEAD. If this occurs, attach the ABSORBER, CR as shown in the figure below.

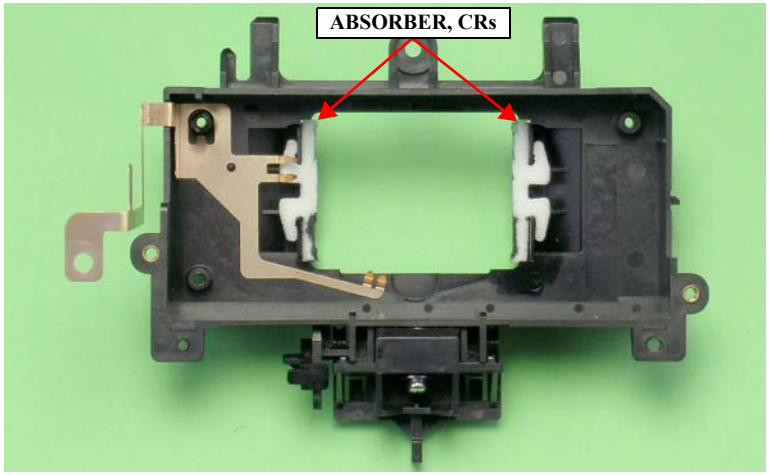

Figure 4-108. Reinstalling the ABSORBER, CRs

11. Peel off the two Head FFCs secured to the PRINT HEAD with two-sided tape, and then disconnect the FFCs from the PRINT HEAD. *See Figure 4-110.*

ADJUSTMENT REQUIRED

Whenever the PRINT HEAD is reinstalled or replaced, the corresponding adjustment must be carried out. *See Chapter 5 on page 292.* When replacing the PRINT HEAD with a new one, note down the 40-digit Head Rank ID indicated on the ID label affixed to the new PRINT HEAD. *See Figure 4-109.*

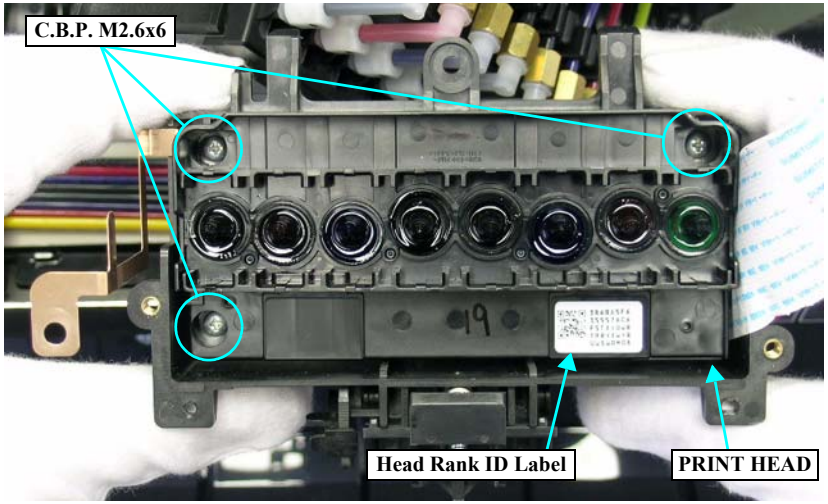

Figure 4-109. Screws Securing the PRINT HEAD

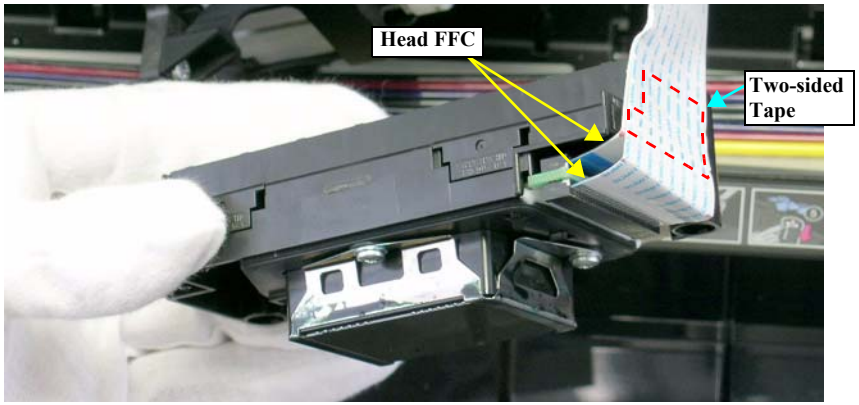

Figure 4-110. Disconnecting the Head FFC

4.2.7.2 VALVE ASSY., HEAD; C

1. Remove the Damper Unit. *See Section 4.2.7.1 on page 267.*

CAUTION

Beware of the following items when performing the next step.
- **As remaining ink may leak or spatter, have a waste cloth beforehand to wipe out it.**
- **Exercise care to avoid letting the dust or any foreign materials get inside the TUBE, SUPPLY, INK.**
- **Be careful not to fold the TUBU, SUPPLY, INK or damage it by hitting it against frame edges.**

2. Loosen the eight screws that secure the TUBE, SUPPLY, INK.
   - CONNECTING SCREW, M7: 8 pcs.
3. Pull out the eight TUBE, SUPPLY, INK from the VALVE ASSY., HEAD; C and release them from the retaining tabs.

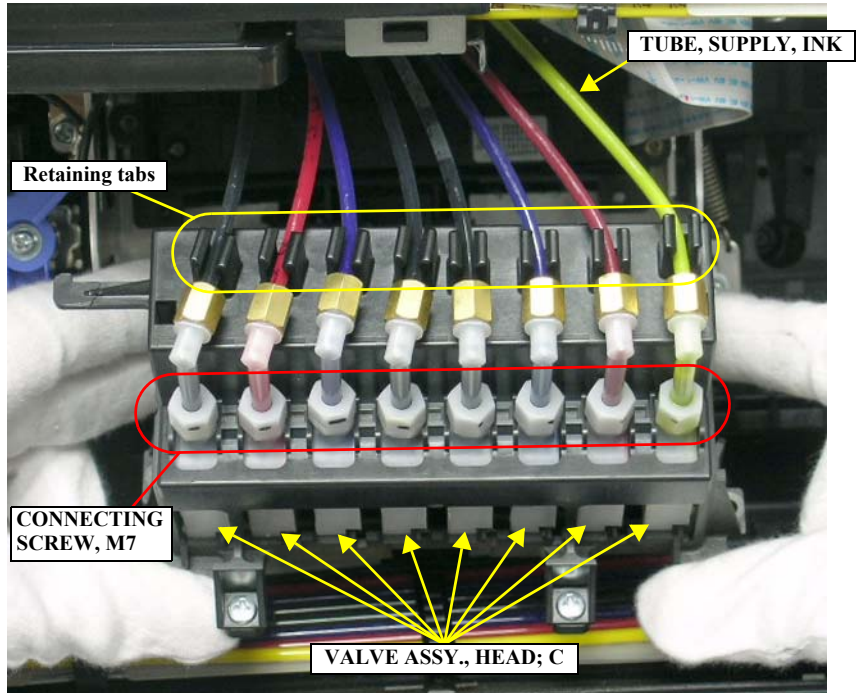

Figure 4-111. Removing the TUBE, SUPPLY, INK

REASSEMBLY

- **Make sure that the O-RING, CONNECTER, M7 is attached to the leading end of each one of the four TUBE, SUPPLY, INK.**

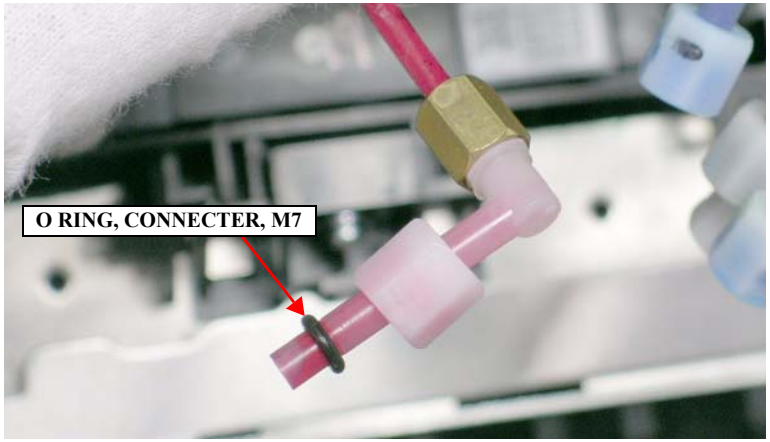

Figure 4-112. Reinstalling the TUBE, SUPPLY, INK (1)

REASSEMBLY

- **Markings (a character "L" or "R" followed by a number) are printed on the surface of the all TUBE, SUPPLY, INK to identify the tubes connecting location. Make sure to connect them to their correct position as shown in the figure below.**

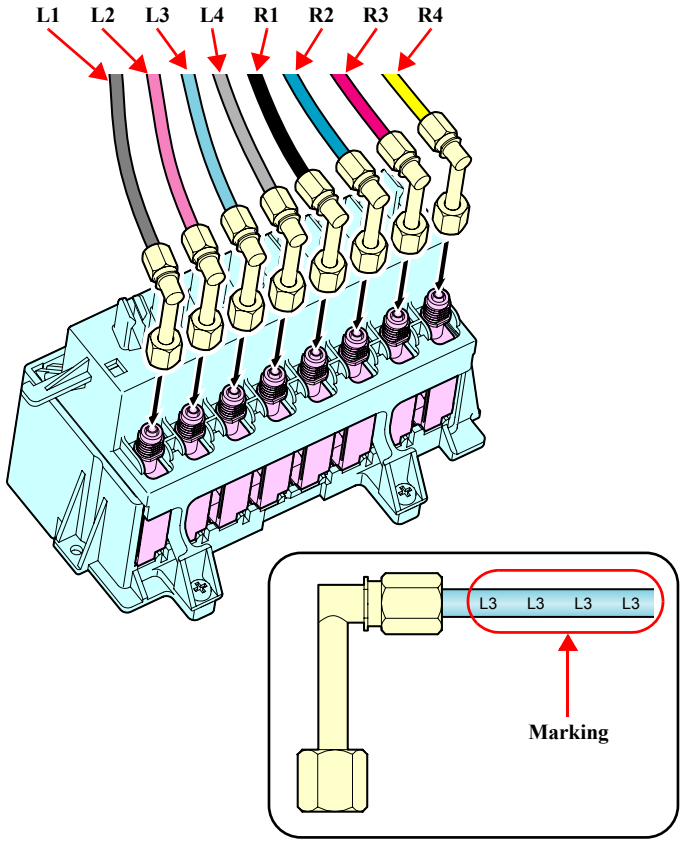

Figure 4-113. Reinstalling the TUBE, SUPPLY, INK (2)

4. Remove the two screws that secure the HOLDER, DAMPER and remove the HOLDER DAMPER turning it.
   - Two C.B.P. M3 x 8 screws

Engage the two coupling tabs of the HOLDER, DAMPER with the coupling pins of the COVER, DUMPER.

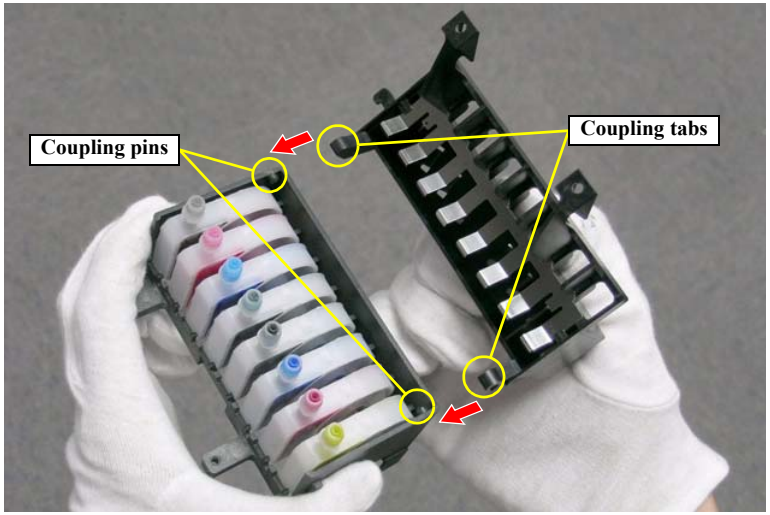

Figure 4-114. Reinstalling the HOLDER, DAMPER

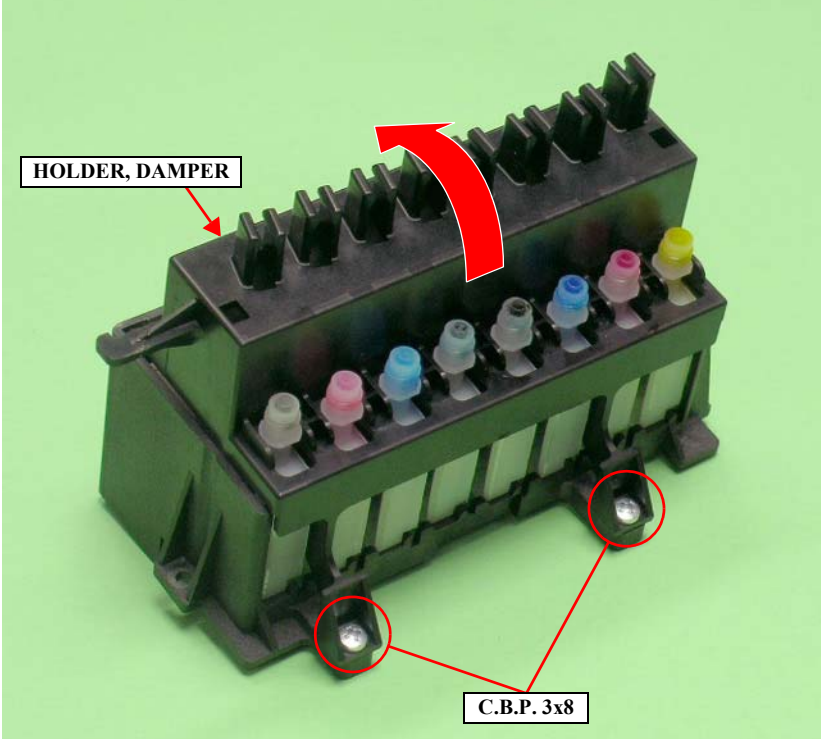

Figure 4-115. Removing the HOLDER, DAMPER

CAUTION

Beware of the following items when performing the next step.

- **Never touch the film part of the VALVE ASSY., HEAD; C.**
- **Be careful not to damage or deform the joint part of the VALVE ASSY., HEAD; C to be connected to the TUBE, SUPPLY, INK.**

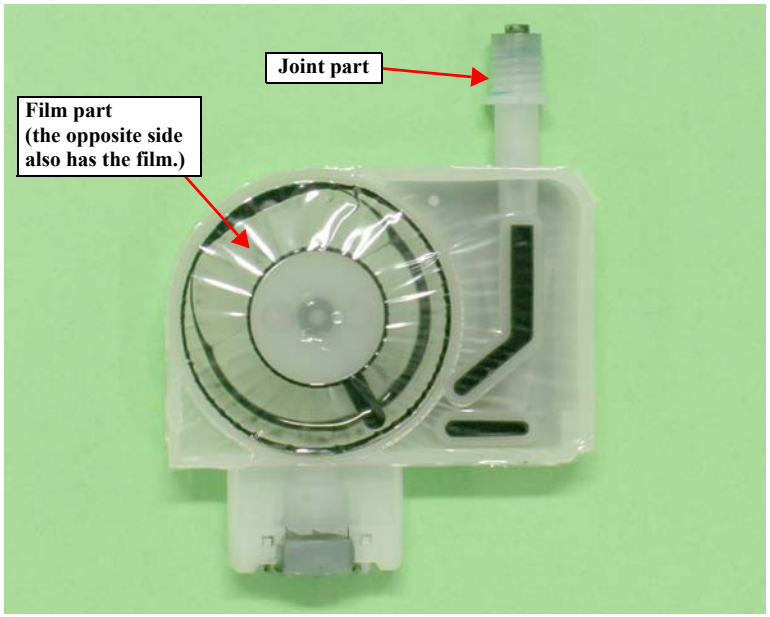

Figure 4-116. Handling the VALVE ASSY., HEAD; C

5. Remove the eight VALVE ASSY., HEAD; C from the COVER, DUMPER.

ADJUSTMENT REQUIRED

Whenever the VALVE ASSY., HEAD; C is reinstalled or replaced, the corresponding adjustment must be carried out. ***See Chapter 5 on page 292.***

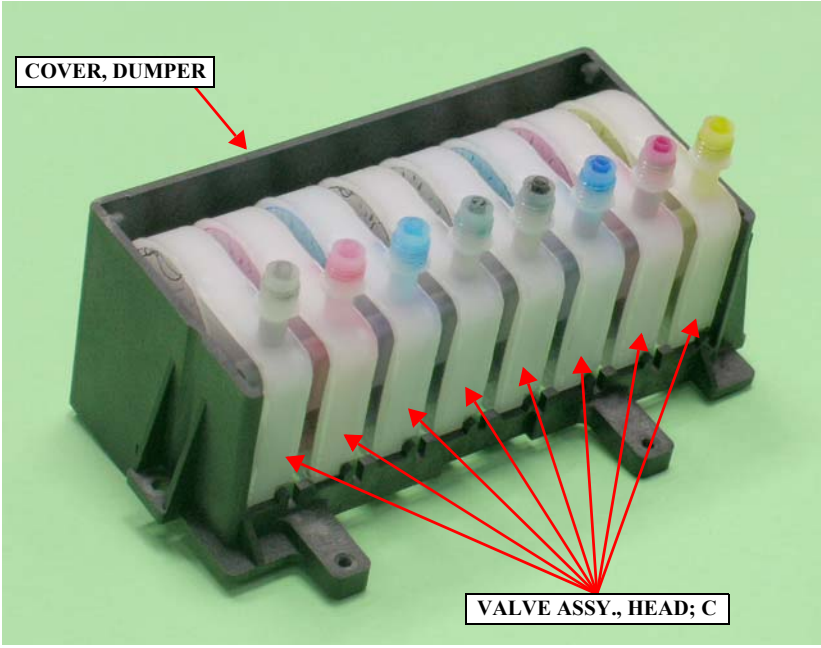

Figure 4-117. Removing the VALVE ASSY., HEAD; C

4.2.7.3 HOLDER ASSY., IC, RIGHT, HOLDER ASSY., IC, LEFT

HOLDER ASSY., IC, RIGHT

1. Remove the R SIDE COVER ASSY. *See Section 4.2.3.4 on page 223.*
2. Release the four TUBE, SUPPLY, INK from the four retaining tabs and the retaining clip.

REASSEMBLY

Make sure that the four TUBE, SUPPLY, INK are routed behind the screwed tab.

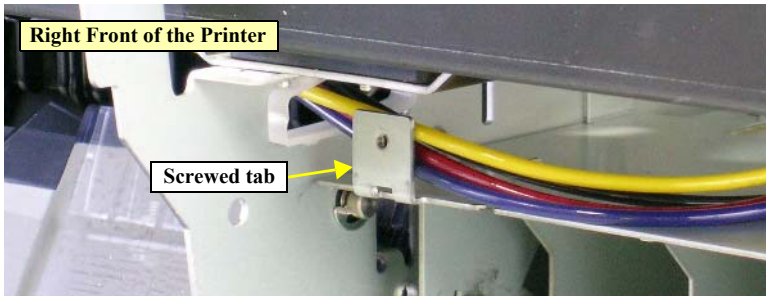

Figure 4-118. Routing the TUBE, SUPPLY, INK

3. Disconnect the four FFCs from the CSIC RELAY BOARD.
4. Lower the I/C, LOCK LEVER.
5. Remove the piece of the acetate tape that secures the harness of the I/C LEVER SENSOR R.
6. Release the two tabs that secure the I/C LEVER SENSOR R and remove it.
7. Remove the connector from the I/C LEVER SENSOR R.

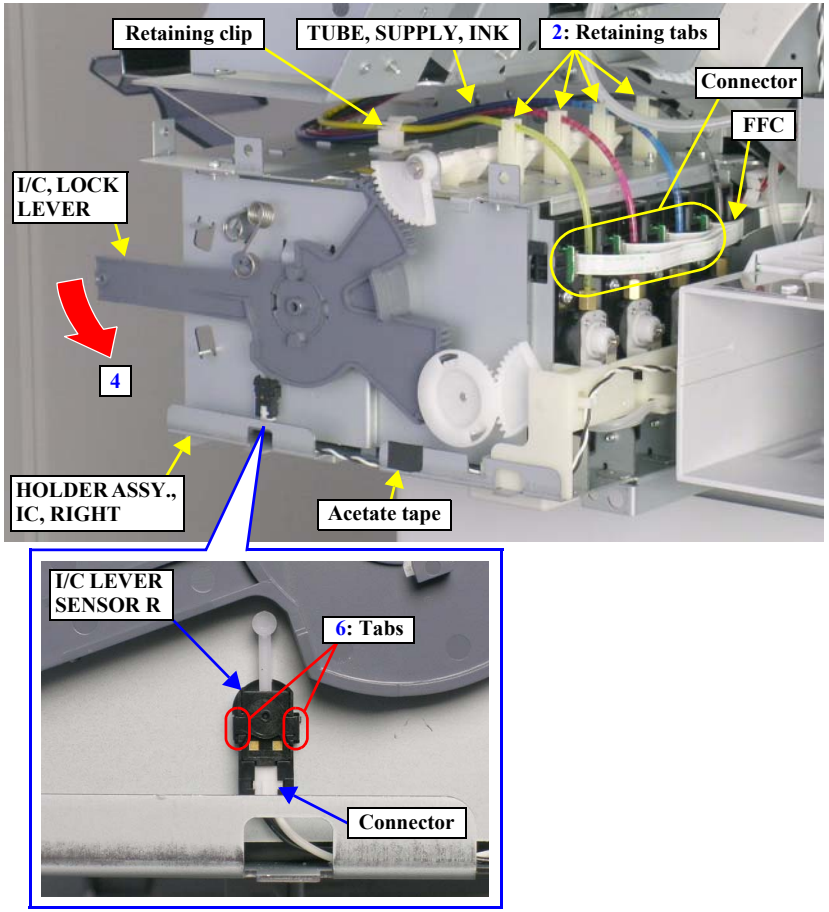

Figure 4-119. Releasing the TUBE, SUPPLY, INK and Removing the I/C LEVER SENSOR R

8. Release the harness of the I/C LEVER SENSOR R from the three hooked tabs of the HARNESS/TUBE STOPPER and pull out the harness.
9. Pull out the TUBE, PRESSURIZING from the HOLDER ASSY., IC, RIGHT, and release it from the three retaining clips of the HARNESS/TUBE STOPPER.

REASSEMBLY

- **Make sure that the joint of the TUBE, PRESSURIZING is located at the retaining clip as shown in the figure below.**

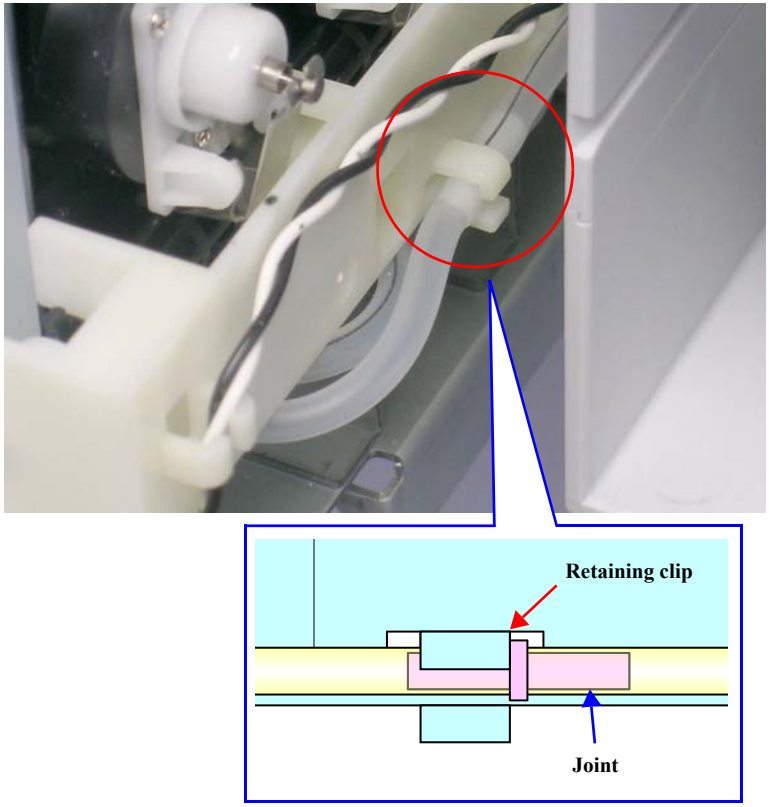

Figure 4-120. Routing the TUBE, PRESSURIZING

- **Insert the TUBE, PRESSURIZING all the way.**

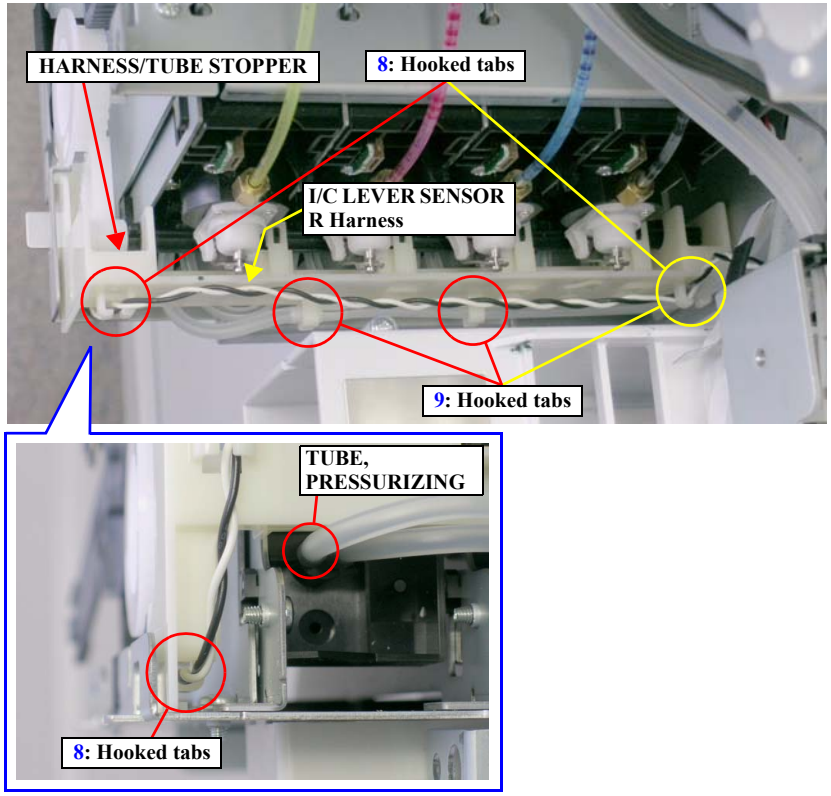

Figure 4-121. Releasing the I/C LEVER SENSOR R Harness and the TUBE, PRESSURIZING

10. Remove the four screws that secure the HOLDER ASSY., IC, RIGHT.
    - Four C.C.S. M4 x 8 screws

CAUTION

When performing the next step, be careful not to pull the HOLDER ASSY., IC, RIGHT too much as it is still connected to the printer with the TUBE, SUPPLY INK.

11. Release the hooked tab that secures the HOLDER ASSY., IC, RIGHT, and remove it.

REASSEMBLY

Make sure to insert the two tabs of the HOLDER ASSY., IC, RIGHT into the two slots.

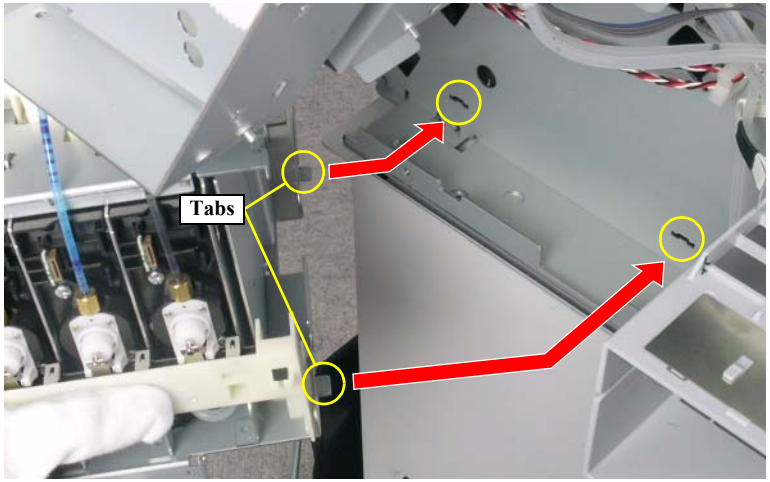

Figure 4-122. Reinstalling the HOLDER ASSY., IC, RIGHT

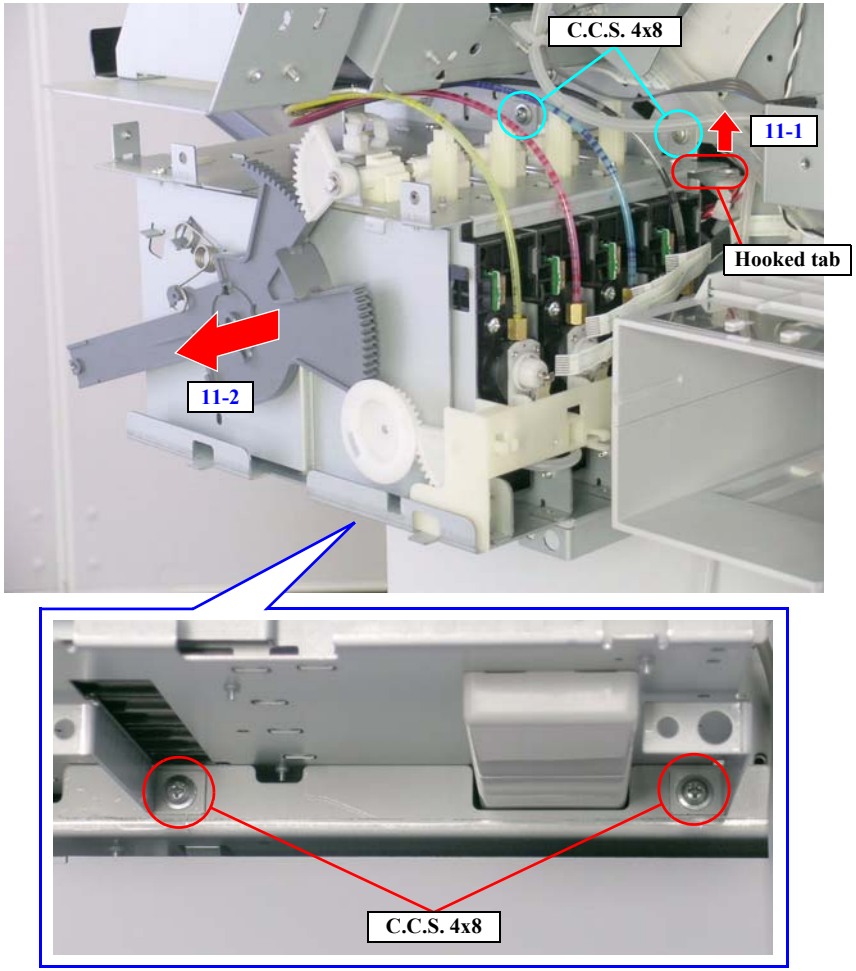

Figure 4-123. Removing the HOLDER ASSY., IC, RIGHT (1)

CAUTION

Beware of the following items when performing the next step.

- **As remaining ink may leak or spatter, have a waste cloth beforehand to wipe out it.**
- **Exercise care to avoid letting the dust or any foreign materials get inside the TUBE, SUPPLY, INK.**

12. Loosen the four screws that secure the four TUBE, SUPPLY, INK, and remove them from the HOLDER ASSY., IC, RIGHT.
    - Four Coupling Screws

REASSEMBLY

- **Make sure that the O-RING is attached to the leading end of each one of the four TUBE, SUPPLY, INK.**

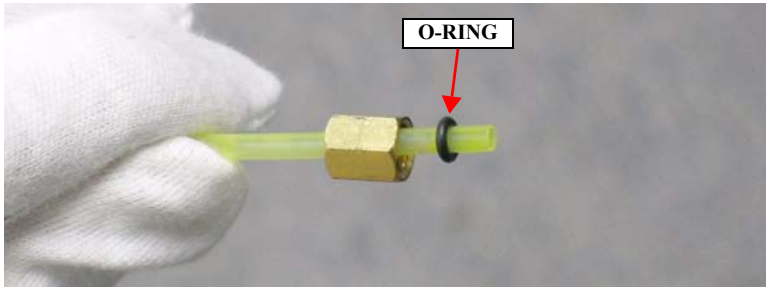

Figure 4-124. Reinstalling the TUBE, SUPPLY, INK

ADJUSTMENT REQUIRED

Whenever the HOLDER ASSY., IC, RIGHT is reinstalled or replaced, the corresponding adjustment must be carried out. ***See Chapter 5 on page 292.***

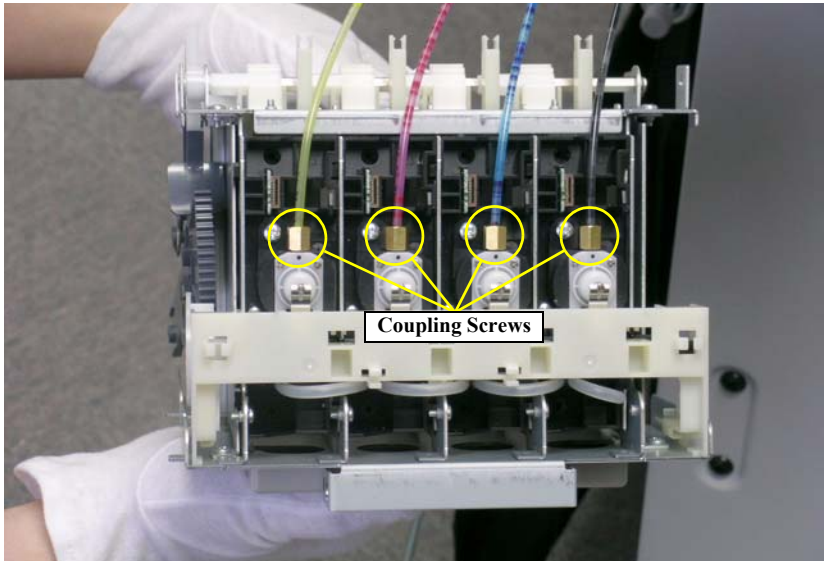

Figure 4-125. Removing the HOLDER ASSY., IC, RIGHT (2)

HOLDER ASSY., IC, LEFT

1. Remove the L SIDE COVER ASSY. *See Section 4.2.3.5 on page 224.*
2. Release the four TUBE, SUPPLY, INK from the four retaining tabs and the retaining clip.
3. Release the four FFCs from the three hooked tabs and disconnect them from the CSIC RELAY BOARD.
4. Lower the I/C, LOCK LEVER.
5. Remove the piece of the acetate tape that secures the harness of the I/C LEVER SENSOR L.
6. Release the two tabs that secure the I/C LEVER SENSOR L and remove it.
7. Remove the connector from the I/C LEVER SENSOR L.

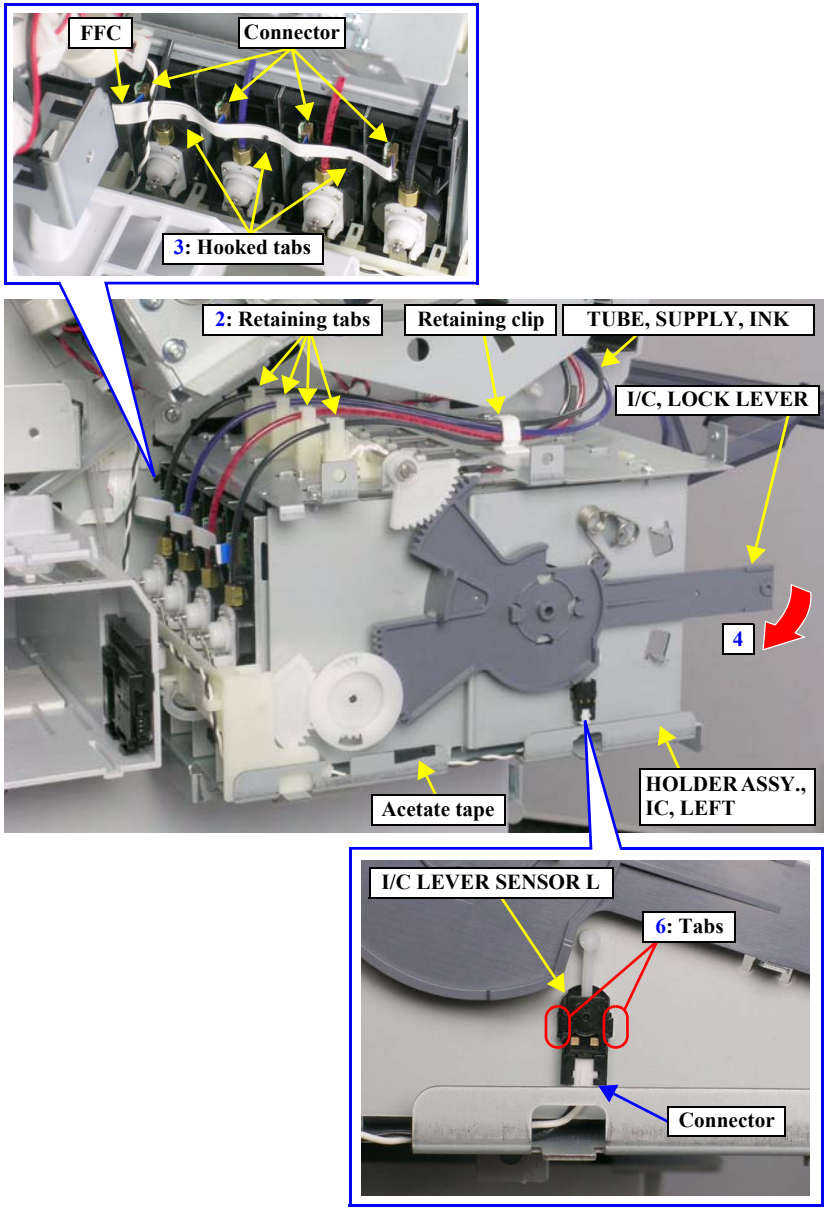

Figure 4-126. Releasing the TUBE, SUPPLY, INK and Removing the I/C LEVER SENSOR L

8. Release the harness of the I/C LEVER SENSOR L from the three hooked tabs of the HARNESS/TUBE STOPPER and pull out the harness.

REASSEMBLY

Route the harness of the I/C LEVER SENSOR L winding one turn of it around the hooked tab of the HARNESS/TUBE STOPPER.
See Figure 4-128.

9. Pull out the TUBE, PRESSURIZING from the HOLDER ASSY., IC, LEFT, and release it from the three retaining clips of the HARNESS/TUBE STOPPER.

REASSEMBLY

- **Make sure that the joint of the TUBE, PRESSURIZING is located at the retaining clip as shown in the figure below.**

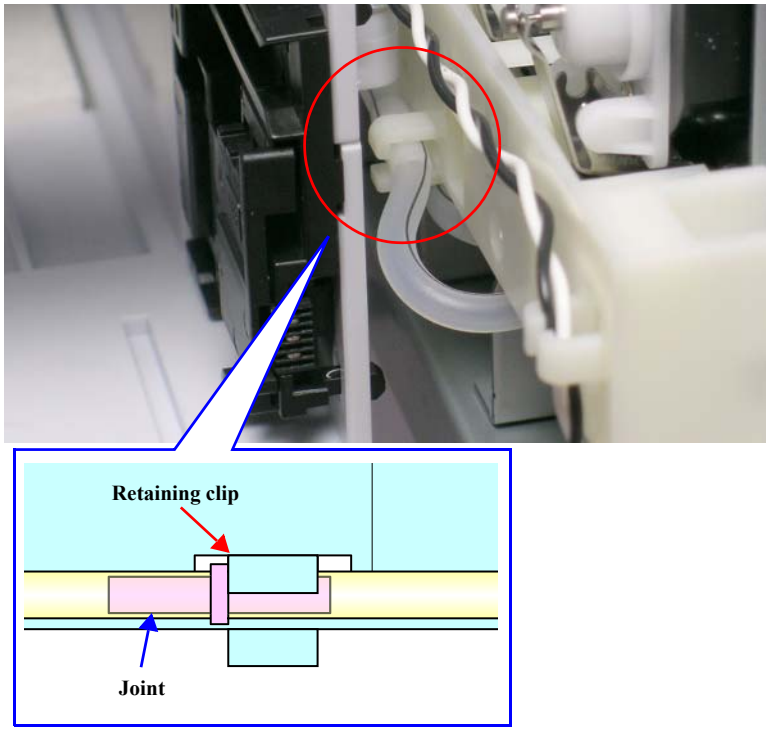

Figure 4-127. Routing the TUBE, PRESSURIZING

- **Insert the TUBE, PRESSURIZING all the way.**

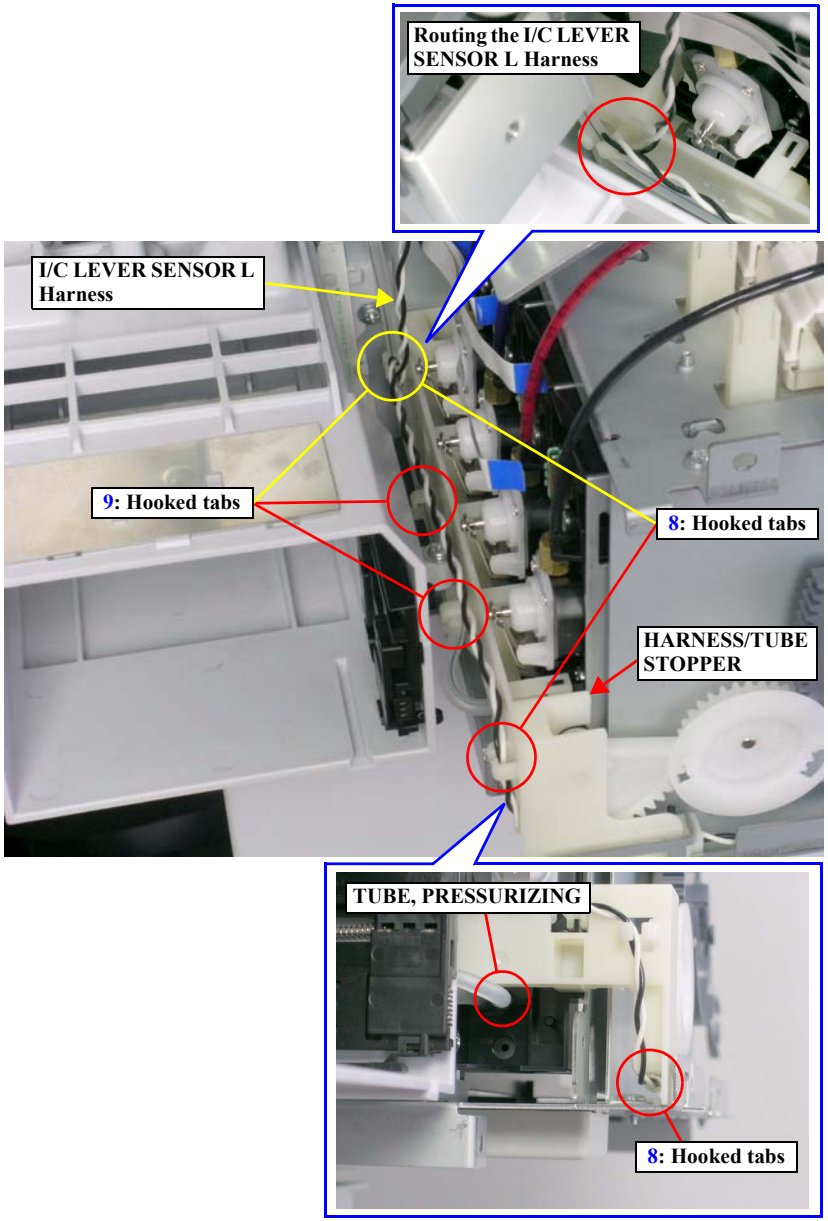

Figure 4-128. Releasing the I/C LEVER SENSOR L Harness and the TUBE, PRESSURIZING

10. Remove the four screws that secure the HOLDER ASSY., IC, LEFT.
    - Four C.C.S. M4 x 8 screws

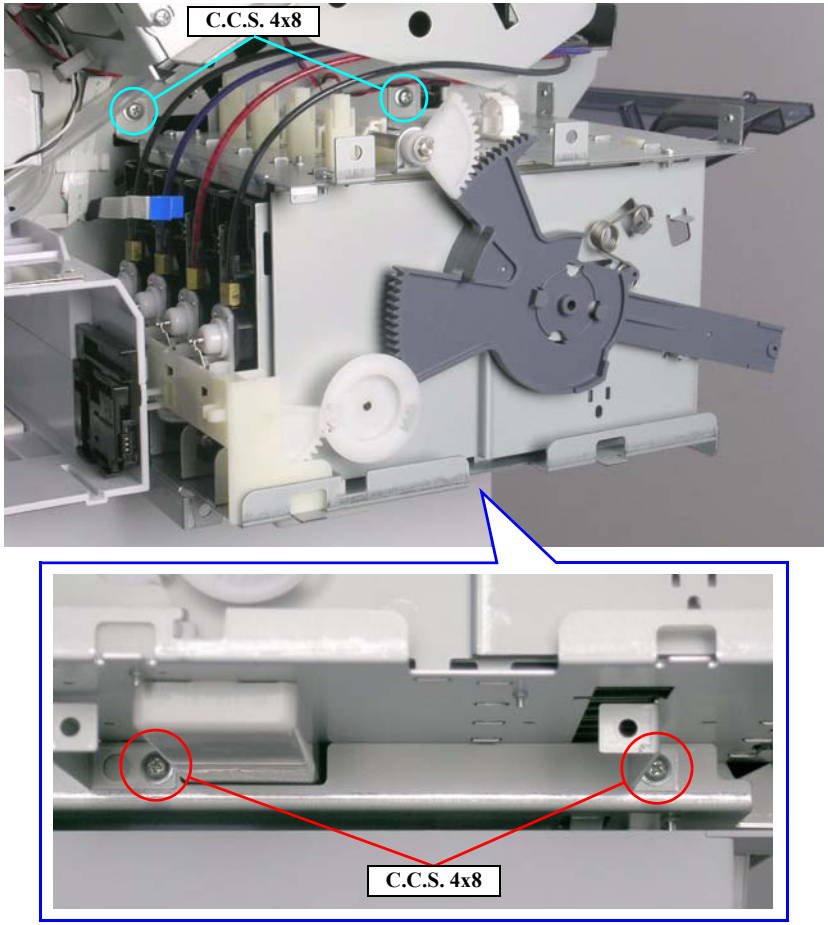

Figure 4-129. Screws Securing the HOLDER ASSY., IC, LEFT

CAUTION

When performing the next step, be careful not to pull the HOLDER ASSY., IC, LEFT too much as it is still connected to the printer with the TUBE, SUPPLY INK.

11. Release the hooked tab that secures the HOLDER ASSY., IC, LEFT, and remove it.

CAUTION

When reinstalling the HOLDER ASSY., IC LEFT, be careful not to trap the Front Sensor harness and the TUBE, INK, WASTE; L between the two screwed tabs and the frame.

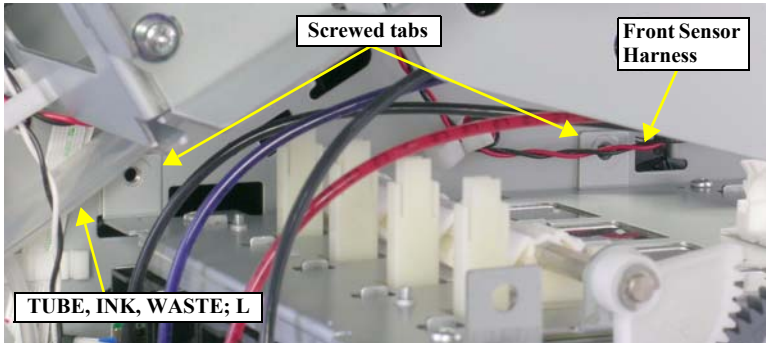

Figure 4-130. Screwed Tabs located at Upper Side of the HOLDER ASSY., IC, LEFT

REASSEMBLY

Make sure to insert the two tabs of the HOLDER ASSY., IC, LEFT into the two slots.

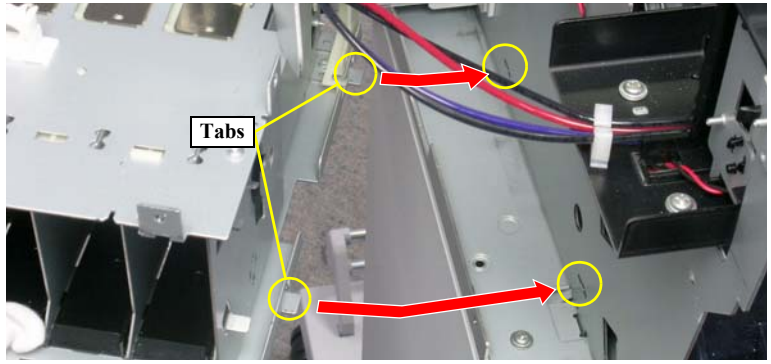

Figure 4-131. Reinstalling the HOLDER ASSY., IC, LEFT

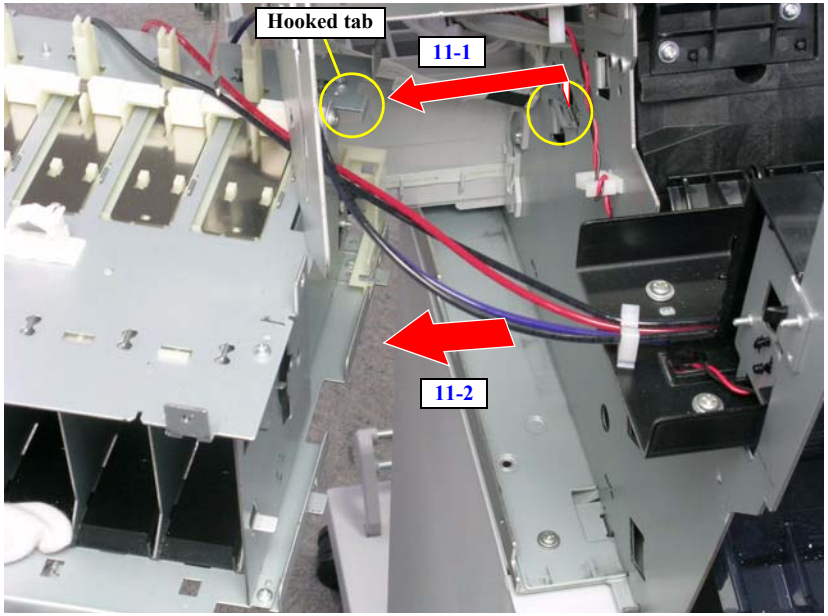

Figure 4-132. Removing the HOLDER ASSY., IC, LEFT (1)

CAUTION

Beware of the following items when performing the next step.

- **As remaining ink may leak or spatter, have a waste cloth beforehand to wipe out it.**
- **Exercise care to avoid letting the dust or any foreign materials get inside the TUBE, SUPPLY, INK.**

12. Loosen the four screws that secure the four TUBE, SUPPLY, INK, and remove them from the HOLDER ASSY., IC, LEFT.
    - Four Coupling Screws

REASSEMBLY

- **Make sure that the O-RING is attached to the leading end of each one of the four TUBE, SUPPLY, INK.**

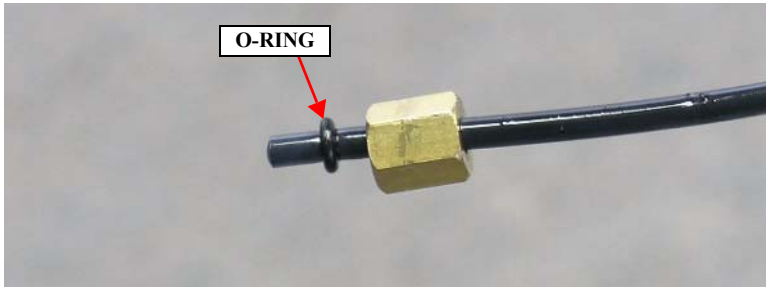

Figure 4-133. Reinstalling the TUBE, SUPPLY, INK

ADJUSTMENT REQUIRED

Whenever the HOLDER ASSY., IC, LEFT is reinstalled or replaced, the corresponding adjustment must be carried out. ***See Chapter 5 on page 292.***

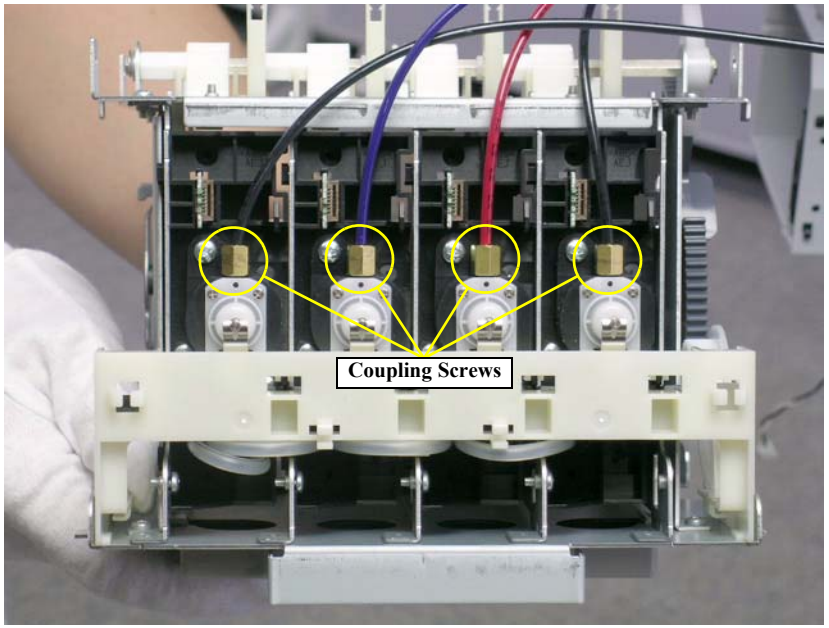

Figure 4-134. Removing the HOLDER ASSY., IC, LEFT (2)

4.2.7.4 PUMP CAP ASSY.

CAUTION

When removing the PUMP CAP ASSY., ink may leak out of the Waste Ink Tubes and the Ink Exhaust. Have a waste cloth beforehand to clean up.

1. Remove the R SIDE COVER ASSY. *See Section 4.2.3.4 on page 223.*
2. Release the harnesses of the Pump Motor from the retaining clip.
3. Disconnect the Pump Motor connector from the relay connector.
4. Pull the Waste Ink Tubes out of the Ink Exhaust.

CAUTION

When reinstalling the Waste Ink Tube, make sure to insert it correctly into the waste ink outlet and route the tubes as shown in the figure right, or ink may leak.

5. Release the two locks of each of the two retaining clips with locks that secure the Pump Motor harnesses and the Waste Ink Tubes and release them from the clips.

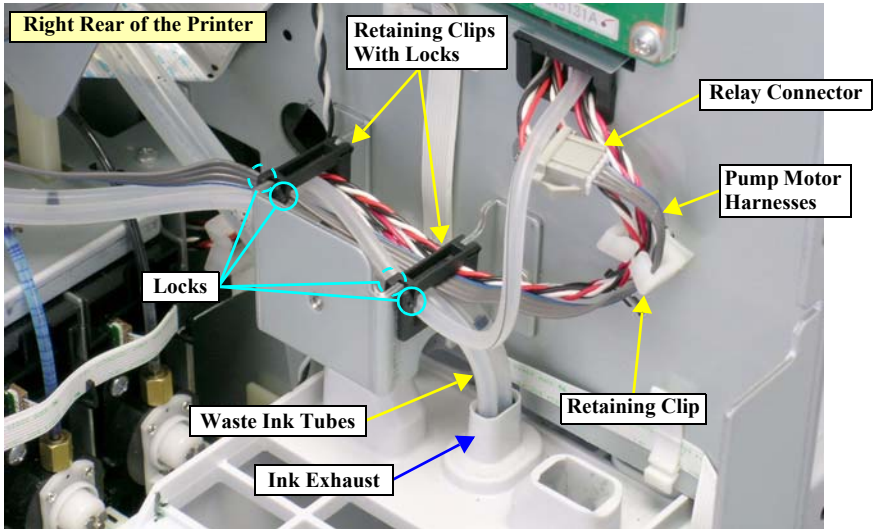

Figure 4-135. Releasing the Pump Motor Harnesses and Waste Ink Tubes

6. Release the harness of the Pump Phase Sensor from the notch.

CAUTION

When removing the PUMP CAP ASSY., the following precautions must be followed.

- **Be careful not to damage the gears engaged with the PUMP CAP ASSY.** ***See Figure 4-137.***
- **Never touch the CLEANER, HEAD, A, ASP nor put it contact with any other parts. Doing so may deteriorate its performance to wipe ink off, and cause poor print quality.**

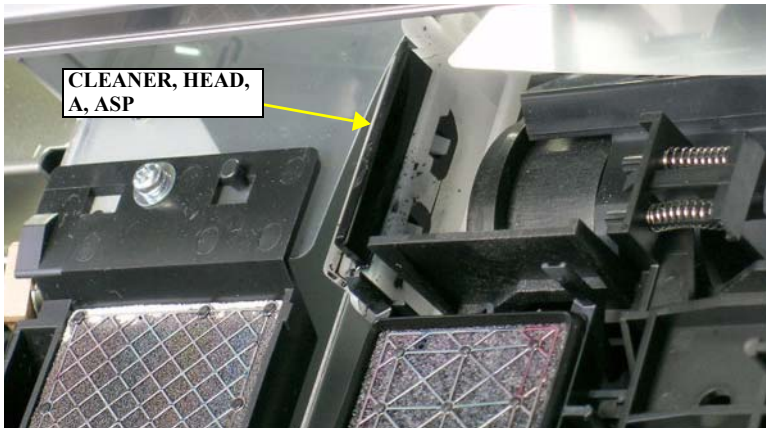

Figure 4-136. Handling the CLEANER, HEAD, A, ASP

7. Remove the four screws that secure the PUMP CAP ASSY., and remove it from rear side of the printer.
   - Four C.C.S. M3 x 8 screws

REASSEMBLY

- **When reinstalling the PUMP CAP ASSY., make sure the positioning tab of the Assy. is set in the positioning slot.**
- **Make sure the two positioning holes of the PUMP CAP ASSY. is set on the guide pins.**

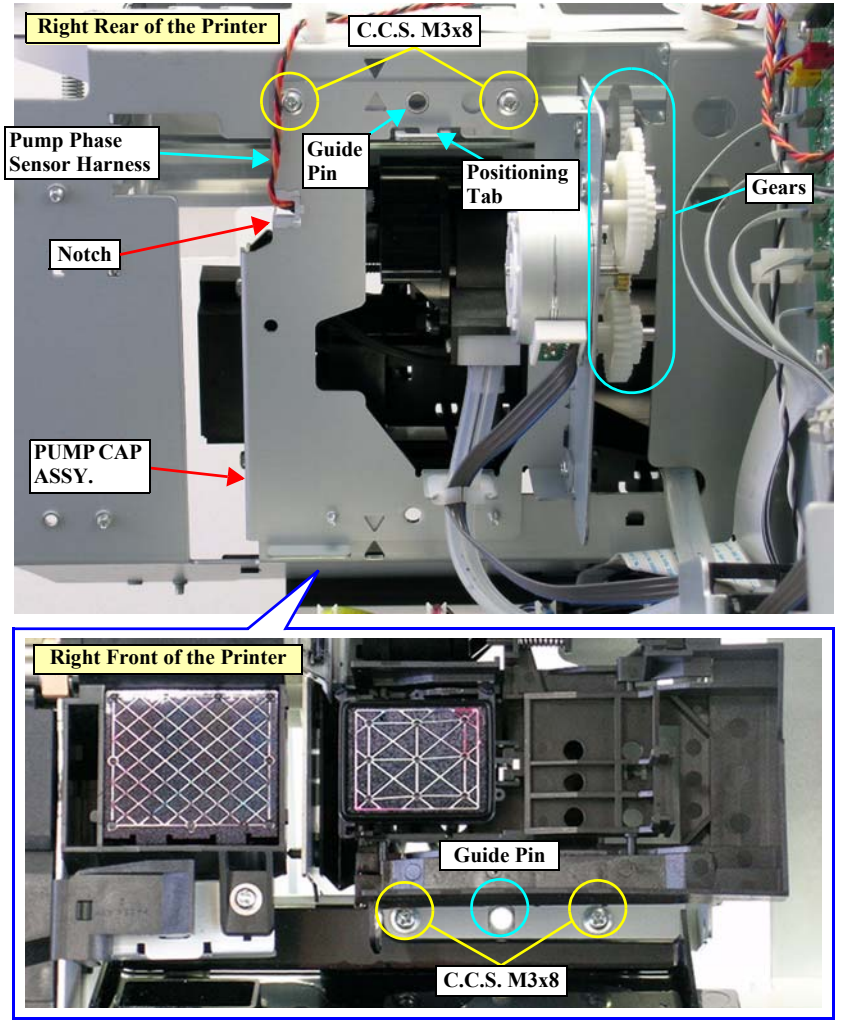

Figure 4-137. Removing the PUMP CAP ASSY. (1)

CAUTION

Follow the procedure below to replace the POROUS PAD, INK EJECT, TRAY. It must be replaced when the PUMP CAP ASSY. has reached its end of life, or the POROUS PAD, INK EJECT, TRAY has absorbed an excess amount of waste ink.

1. **Remove the POROUS PAD, INK EJECT, TRAY from the INK EJECT TRAY.**
2. **If paper dust has accumulated on the INK EJECT TRAY, remove the paper dust.**
   *** Do not use an airbrush to blow the dust off as the dust can get inside the printer.**
3. **Attach a new POROUS PAD, INK EJECT, TRAY setting its four positioning holes onto the ribs on the Waste Ink Tray.**

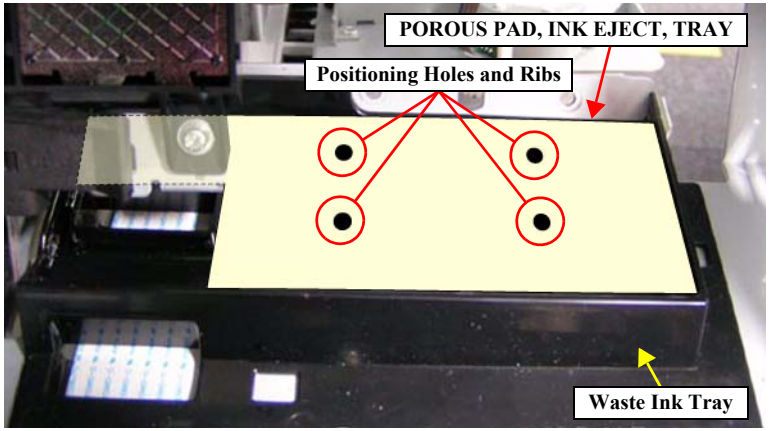

Figure 4-138. Replacing the POROUS PAD, INK EJECT, TRAY

4. Disconnect the connector from the Pump Phase Sensor.

ADJUSTMENT REQUIRED

Whenever the PUMP CAP ASSY. is replaced, the corresponding adjustment must be carried out. *See Chapter 5 on page 292.*

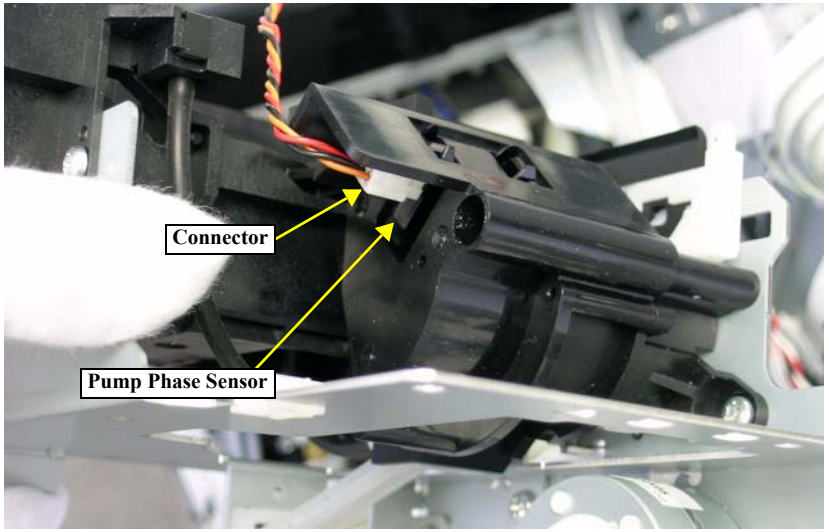

Figure 4-139. Removing the PUMP CAP ASSY. (2)

4.2.7.5 CLEANER, HEAD, A, ASP

1. Remove the PUMP CAP ASSY. *See Section 4.2.7.4 on page 284.*

CAUTION

Never touch the CLEANER, HEAD, A, ASP with bare hands as the oil of your hand remained on the cleaner surface may repel ink and cause partial dot omission. Use a pair of tweezers cleaned by a cleaner or etc. to handle the CLEANER, HEAD, A, ASP.

2. Release the CLEANER, HEAD, A, ASP from the two hooked tabs, and remove it from the PUMP CAP ASSY.

REASSEMBLY

Make sure to install the CLEANER, HEAD, A, ASP in the correct orientation as shown in the figure below.

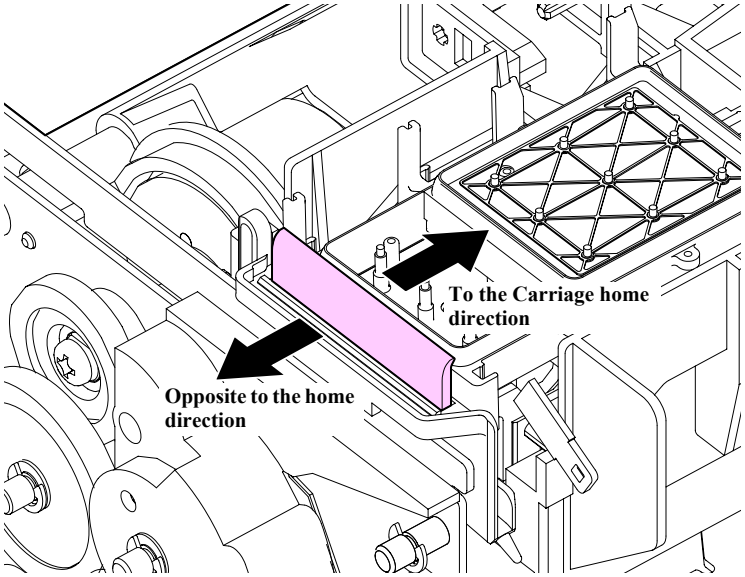

Figure 4-140. Orientation of the CLEANER, HEAD, A, ASP

ADJUSTMENT REQUIRED

Whenever the CLEANER, HEAD, A, ASP is replaced, the corresponding adjustment must be carried out. ***See Chapter 5 on page 292.***

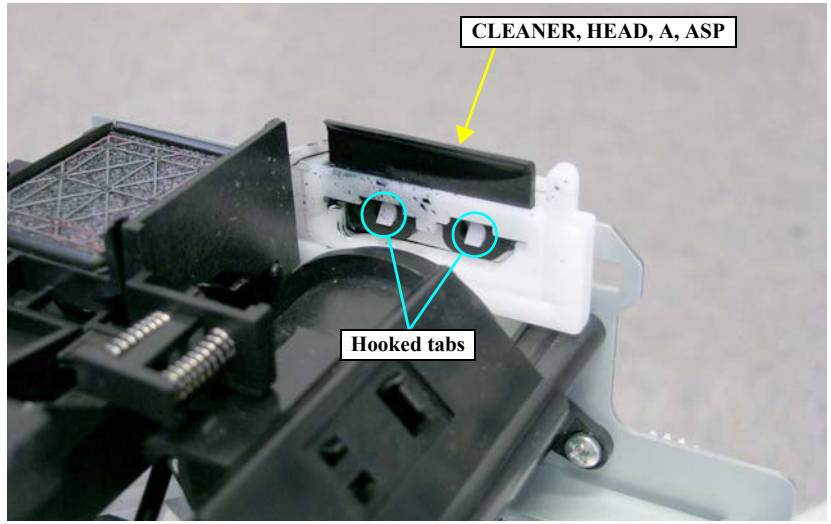

Figure 4-141. Removing the CLEANER, HEAD, A, ASP

4.2.7.6 BOX ASSY., FLUSHING (R, L)

CAUTION

When removing the BOX ASSY., FLUSHING (R/L), ink may leak out of the Waste Ink Tubes and the Ink Exhaust. Have a waste cloth beforehand to wipe out the leaked ink.

BOX ASSY., FLUSHING (R)

1. Remove the R SIDE COVER ASSY. *See Section 4.2.3.4 on page 223.*

CAUTION

When performing the next step, be careful not to damage the SCALE, CR.

2. Remove the 2 screws that secure the BOX ASSY., FLUSHING (R).
   - Two C.P.S.(S-P2) M3 x 8 screws
3. Pull out the TUBE, INK, WASTE; R from the Ink Exhaust through the two holes of the frame, and remove the BOX ASSY., FLUSHING (R).

CAUTION

When reinstalling the TUBE, INK, WASTE; R, make sure to insert it correctly into the waste ink outlet and route the tubes as shown in the figure right, or ink may leak.

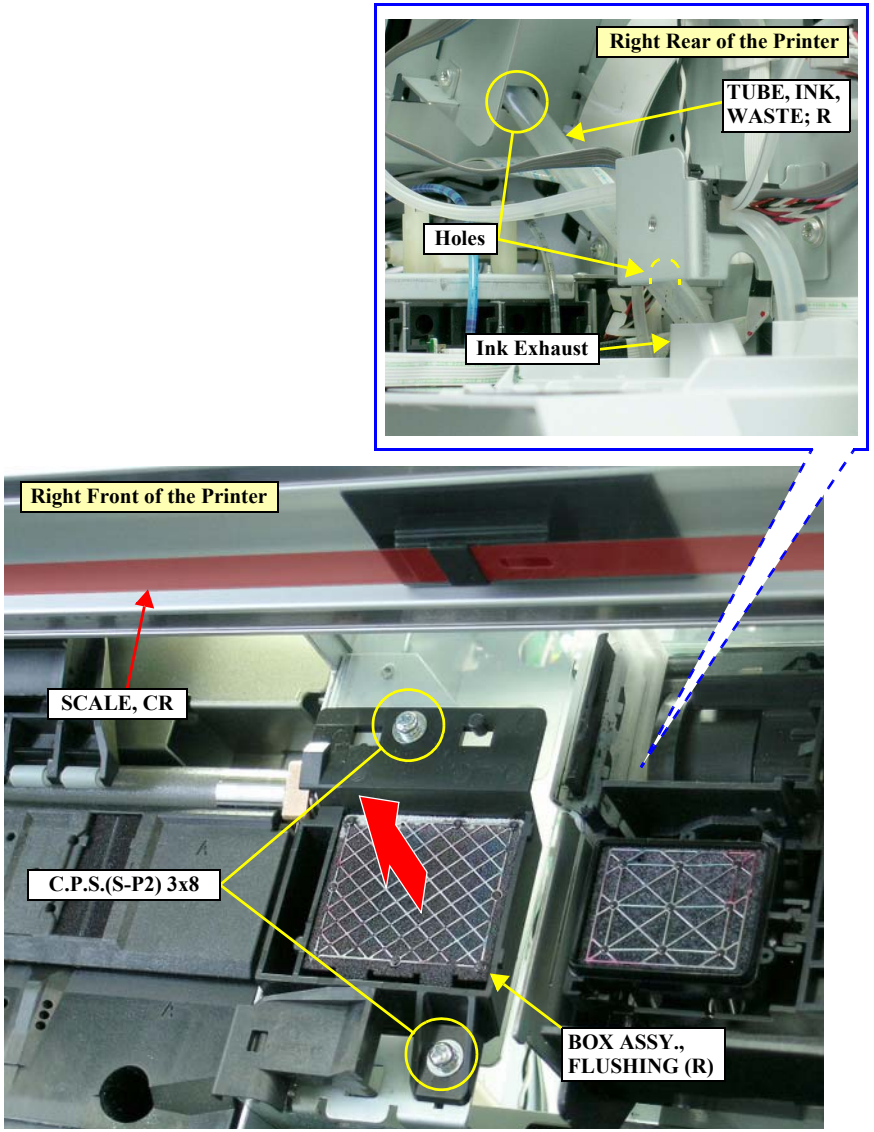

Figure 4-142. Removing the BOX ASSY., FLUSHING (R)

CAUTION

The COVER, MIST may come off the frame after removing the BOX ASSY., FLUSHING (R). If the COVER, MIST come off, reattach them on the frame matching up their holes with the three tabs and one guide pin as shown in the figure below.

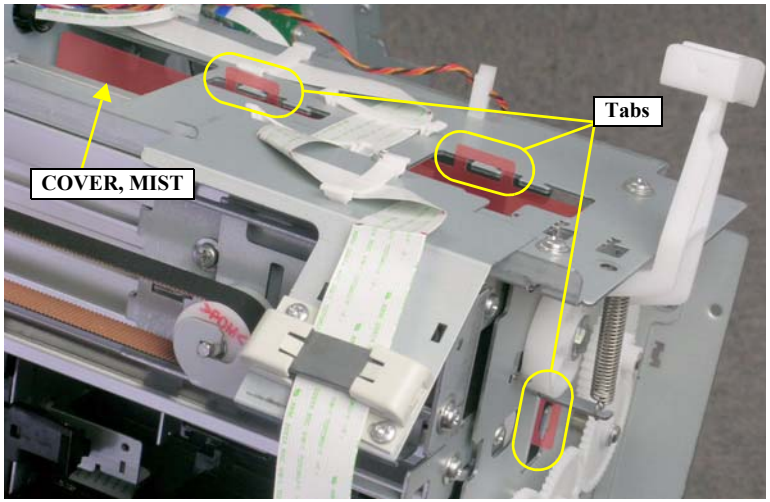

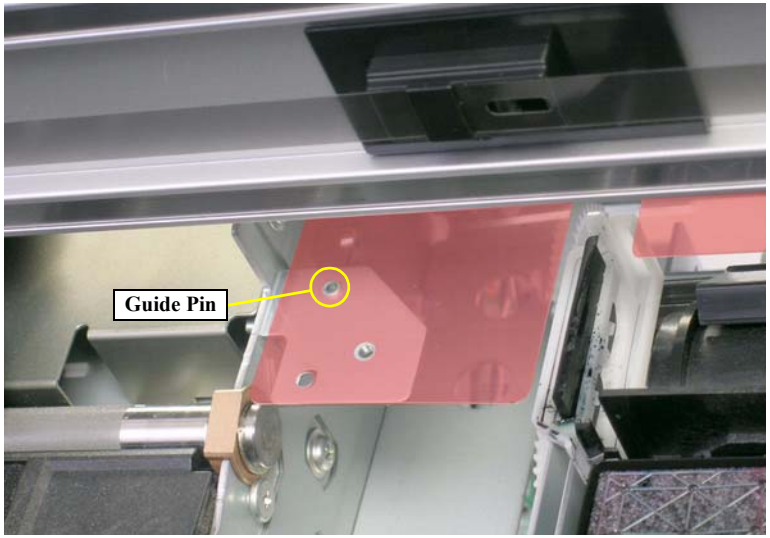

Figure 4-143. Reattaching the COVER, MIST

REASSEMBLY

Set the two guide pins of the BOX ASSY., FLUSHING (R) in the positioning holes on the frame.

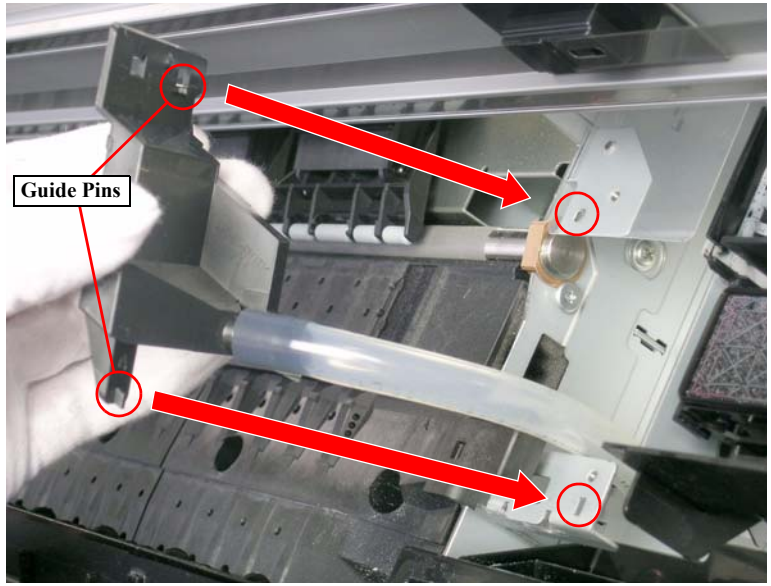

Figure 4-144. Reinstalling the BOX ASSY., FLUSHING (R)

ADJUSTMENT REQUIRED

Whenever the BOX ASSY., FLUSHING (R) is replaced, the corresponding adjustment must be carried out. *See Chapter 5 on page 292.*

BOX ASSY., FLUSHING (L)

1. Remove the L SIDE COVER ASSY. *See Section 4.2.3.5 on page 224.*
2. Remove the 2 screws that secure the BOX ASSY., FLUSHING (L).
   - Two C.C.P. M3 x 8 screws
3. Pull out the TUBE, INK, WASTE; L from the Ink Exhaust through the two holes of the frame, and remove the BOX ASSY., FLUSHING (L).

CAUTION

When reinstalling the TUBE, INK, WASTE; L, make sure to insert it correctly into the waste ink outlet and route the tubes as shown in the figure right, or ink may leak.

REASSEMBLY

- **Set the two positioning holes of the BOX ASSY., FLUSHING (L) onto the guide pins on the frame.**
- **Before screwing the BOX ASSY., FLUSHING (L), make sure that its upper edge is not in contact with the ROLLER, PF.**

ADJUSTMENT REQUIRED

Whenever the BOX ASSY., FLUSHING (L) is replaced, the corresponding adjustment must be carried out. ***See Chapter 5 on page 292.***

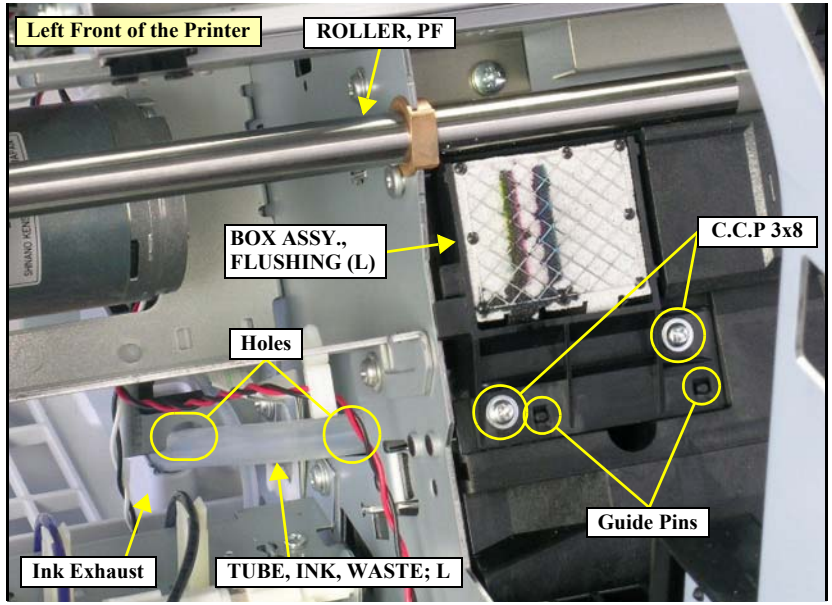

Figure 4-145. Removing the BOX ASSY., FLUSHING (L)

4.2.7.7 PUMP ASSY., SUPPLY

1. Remove the COVER, REAR. *See Section 4.2.3.6 on page 225.*
2. Disconnect the connector both of the Pressure Motor and the Regulator Solenoid from the relay connectors. *See Figure 4-146.*
3. Release the harnesses both of the Pressure Motor and the Regulator Solenoid from the eight retaining clips. *See Figure 4-146.*

CHECK POINT

The Stylus Pro 7400/7800 has 6 retaining clips for the Pressure Motor and the Regulator Solenoid.

4. Disconnect the connector from the Pressure Sensor. *See Figure 4-147.*
5. Pull the two TUBE, PRESSURIZINGs shown in Figure 4-147 out of the PUMP ASSY., SUPPLY.

CAUTION

When inserting the two TUBE, PRESSURIZINGs into the PUMP ASSY., SUPPLY, pay attention to the followings. ***See Figure 4-147.***

- **Be careful not to insert them on wrong shafts.**
  One tube come from the direction of the carriage home position should be inserted on the lower shaft, and the other tube that comes from the opposite direction should be inserted on the upper shaft.
- **Make sure to insert them on the shaft as far as they will go.**

6. Remove the two screws that secure the PUMP ASSY., SUPPLY. *See Figure 4-147.*
   - Two C.C.S. M3 x 8 screws
7. Lift the PUMP ASSY., SUPPLY obliquely upward to release the tab, and remove the PUMP ASSY., SUPPLY. *See Figure 4-147.*

ADJUSTMENT REQUIRED

Whenever the PUMP ASSY., SUPPLY is replaced, the corresponding adjustment must be carried out. ***See Chapter 5 on page 292.***

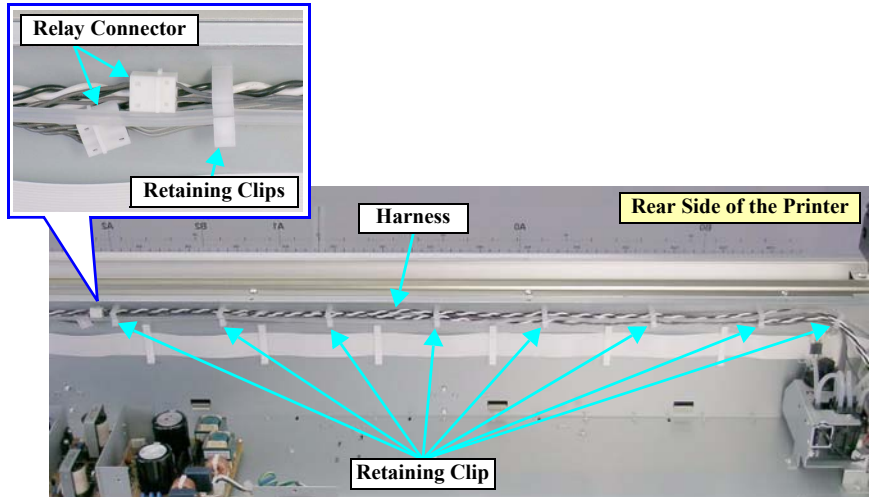

Figure 4-146. Releasing the Harnesses

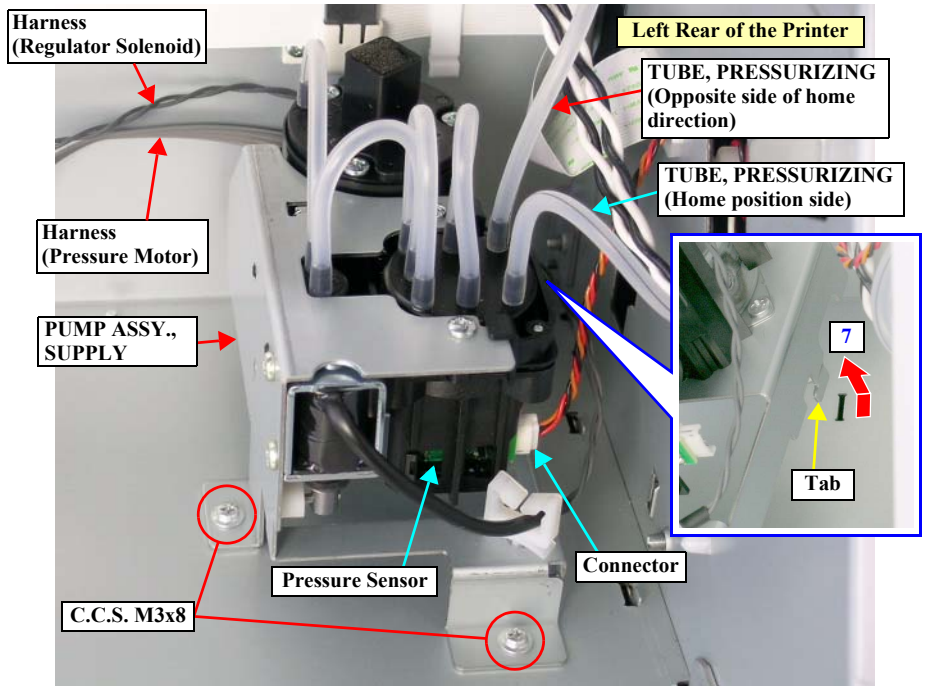

Figure 4-147. Removing the PUMP ASSY., SUPPLY

CHAPTER

5

ADJUSTMENT

5.1 Overview

This chapter describes the Adjustment Program software utility and the adjustment procedures required after repairing or replacing certain parts in the Stylus Pro 7400/7800/9400/9800.

5.1.1 Precautions

Always observe the following cautions whenever make an adjustment on the printer.

- **Always refer to "5.1.4 Required Adjustments by Part or Unit" *(p.294)* and make sure to perform all adjustments listed in the table in the given order.**
- **Always read and follow the precautions given in each section that explains each adjustment. Ignoring the precautions can result in malfunction of the printer.**

5.1.2 Adjustment Workflow

See "5.1.3 Parts and Units that Require Adjustments" *(p.293)* to check whether the part you repaired or replaced is included in the list. And, if it is, see "5.1.4 Required Adjustments by Part or Unit" *(p.294)* to make sure what adjustments must be made. Be sure to perform the all required adjustments in the specified order given in the table.

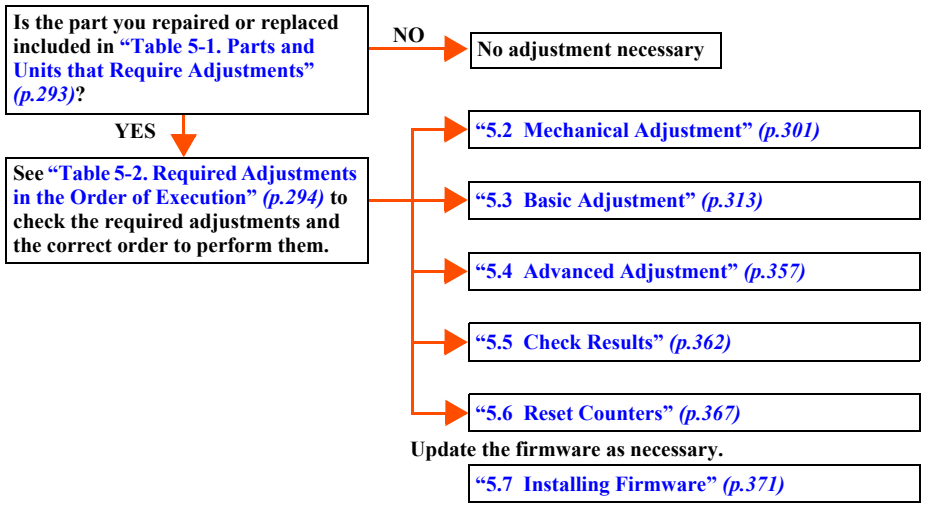

5.1.3 Parts and Units that Require Adjustments

The following parts and units require adjustments after they are repaired or replaced.

Table 5-1. Parts and Units that Require Adjustments

Part or Unit Name (Disassembly/Reassembly reference page)	
Main Board* (BOARD ASSY., MAIN *(p.232)*)	
Power Supply Board (P/S BOARD ASSY. *(p.234)*)	
Relay Board (BOARD ASSY., SUB *(p.236)*)	
Cleaning Unit (PUMP CAP ASSY. *(p.284)*, CLEANER, HEAD, A, ASP *(p.287)*, BOX ASSY., FLUSHING (R, L) *(p.288)*)	
Pressure Pump Unit (PUMP ASSY., SUPPLY *(p.291)*)	
Printhead *(p.267)*	
Damper (VALVE ASSY., HEAD; C *(p.271)*)	
Motor	CR Motor (CR MOTOR ASSY. *(p.243)*)
	PF Motor (PF MOTOR ASSY. *(p.255)*)
Sensor	Paper Thickness Sensor (P Thick1 Sensor, P Thick2 Sensor *(p.261)*)
	Ink Mark Sensor *(p.263)*
	CR Encoder Sensor *(p.246)*
	Rear Sensor (P Rear Sensor *(p.262)*)
	PF Encoder Sensor *(p.258)*
Ink Cartridge Slot (HOLDER ASSY., IC, RIGHT, HOLDER ASSY., IC, LEFT *(p.275)*)	
Cutter Solenoid (CUTTER SOLENOID ASSY. *(p.248)*)	
CR Timing Belt (CR BELT *(p.240)*)	

Note "*": Required adjustments after repairing or replacing the Main Board differs according to whether parameters stored on the NVRAM can be backed up or not.

5.1.4 Required Adjustments by Part or Unit

The following tables list adjustments required after each part or unit is repaired or replaced. The adjustments are listed in the order of executing them.

Note "*1": RP = After replacing the part with a new one.

"*2": RM = After repairing the part (includes when it is just removed and reinstalled)

Table 5-2. Required Adjustments in the Order of Execution

Part Name		Required Adjustment	RP*1	RM*2	Page
Main Board (Backup = OK)	1	Installing Firmware	○	---	p.371
	2	NVRAM Back Up and Write	○	---	p.338
	3	Colorimetric Calibration (Color ID)	○	---	p.341
Main Board (Backup = NG)	1	Installing Firmware	○	---	p.371
	2	Initial Ink Charge Flag ON/OFF	○	---	p.337
	3	RTC&USB ID&IEEE1394 ID	○	---	p.313
	4	Head Rank ID	○	---	p.314
	5	Input Serial Number	○	---	p.315
	6	Rear Sensor Adjustment	○	---	p.340
	7	Check Nozzle	○	---	p.362
	8	Check Alignment	○	---	p.363
	9	980mm Band Feed Adjustment	○	---	p.336
	10	Nozzle Bi-D Adjustment	○	---	p.321
	11	Print Head Slant Adjustment (PF)	○	---	p.322
	12	Print Head Slant Adjustment (CR)	○	---	p.325
	13	Ink Mark Sensor Level Adjustment	○	---	p.328
	14	T&B&S (Roll Paper)	○	---	p.316
	15	Platen Position Adjustment	○	---	p.334
	16	Ink Mark Sensor Adjustment for Auto Nozzle Check	○	---	p.331
	17	Auto Uni-D Adjustment	○	---	p.329
	18	Auto Bi-D Adjustment	○	---	p.357
	19	Cutter Pressure Adjustment	○	---	p.320
	20	Colorimetric Calibration (Color ID)	○	---	p.341

Table 5-2. Required Adjustments in the Order of Execution (continued)

Part Name		Required Adjustment	RP*1	RM*2	Page
Power Supply Board	1	Colorimetric Calibration (Color ID)	○	---	p.341
Relay Board	1	Colorimetric Calibration (Color ID)	○	---	p.341
Cleaning Unit	1	Reset When Cleaning Unit Change	○	---	p.368
	2	Reset PG Switching Counter	○	---	p.367
Pressure Pump Unit	1	Reset Pump Counter	○	---	p.370
Printhead	1	Cleaning	○	---	p.339
	2	Head Rank ID	○	---	p.314
	3	Check Nozzle	○	---	p.362
	4	Check Alignment	○	○	p.363
	5	Nozzle Bi-D Adjustment	○	○	p.321
	6	Print Head Slant Adjustment (PF)	○	○	p.322
	7	Print Head Slant Adjustment (CR)	○	○	p.325
	8	Auto Uni-D Adjustment	○	○	p.329
	9	Auto Bi-D Adjustment	○	○	p.357
	10	Print Image	○	○	p.366
	11	Reset When PrintHead Change	○	---	p.369
	12	Colorimetric Calibration (Color ID)	○	---	p.341
Damper	1	Initial Ink Charge	○	○	p.339
	2	Check Nozzle	○	---	p.362
	3	Air leak check	○	○	p.310
CR Motor (or CR Timing Belt)	1	CR Timing Belt Tension Adjustment	○	○	p.306
	2	Nozzle Bi-D Adjustment	○	○	p.321
	3	T&B&S (Roll Paper)	○	○	p.316
	4	Platen Position Adjustment	○	○	p.334
	5	Auto Uni-D Adjustment	○	○	p.329
	6	Auto Bi-D Adjustment	○	○	p.357
	7	Reset When CR Unit Change	○	---	p.368

Table 5-2. Required Adjustments in the Order of Execution (continued)

Part Name		Required Adjustment	RP*1	RM*2	Page
PF Motor	1	PF Timing Belt Tension Adjustment	○	○	p.307
	2	T&B&S + 980mm Band Feed	○	○	p.318
	3	Reset PF Motor Counter	○	---	p.367
Paper Thickness Sensor	1	Paper Thickness Sensor Position Adjustment	○	○	p.304
Ink Mark Sensor	1	Ink Mark Sensor Height Adjustment	○	○	p.301
	2	Ink Mark Sensor Level Adjustment	○	○	p.328
	3	T&B&S (Roll Paper)	○	---	p.316
	4	Platen Position Adjustment	○	○	p.334
	5	Ink Mark Sensor Adjustment for Auto Nozzle Check	○	○	p.331
	6	Auto Uni-D Adjustment	○	○	p.329
	7	Auto Bi-D Adjustment	○	○	p.357
CR Encoder Sensor	1	CR Encoder Sensor Adjustment	○	---	p.308
Rear Sensor	1	Rear Sensor Adjustment	○	---	p.340
PF Encoder Sensor	1	PF Encoder Sensor Adjustment	○	---	p.309
	2	T&B&S + 980mm Band Feed	○	---	p.318
Ink Tube	1	Air leak check	○	○	p.310
Ink Cartridge Slot	1	Air leak check	○	○	p.310
Cutter Solenoid	1	Cutter Position/Height Adjustment	○	○	p.302
	2	Cutter Pressure Adjustment	○	○	p.320

5.1.5 Description of Adjustments

The following tables describes the general outline of the adjustments.

Note "*1": AU = Adjustment Program

"*2": SM = Serviceman Mode (See "1.4.6 SERVICEMAN MODE" *(p.105)*.)

"*3": AT = Jig or Tool for the adjustment (does not include the program tool)

MECHANICAL ADJUSTMENT

Adjustment	General Overview	Tool			Page
		AU*1	SM*2	AT*3	
Ink Mark Sensor Height Adjustment	Adjusts the position of the Ink Mark Sensor so that the gap between the sensor and the platen becomes properly.	---	---	○	p.301
Cutter Position/Height Adjustment	Adjusts the Cutter position and checks the paper cutoff position to optimize the gap between the cutter and the bumps for the cutter.	---	---	○	p.302
Paper Thickness Sensor Position Adjustment	Adjusts the attaching positions of the Paper Thick Sensor 1 and 2 so that the sensors can detect paper thickness accurately.	---	○	○	p.304
CR Timing Belt Tension Adjustment	Adjusts the tension of the CR Timing Belt to a specified level.	---	---	---	p.306
PF Timing Belt Tension Adjustment	Adjusts the tension of the PF Timing Belt to a specified level.	---	---	○	p.307
CR Encoder Sensor Adjustment	Adjusts the position of the CR Scale in relation to that of the CR Encoder Sensor.	---	---	---	p.308
PF Encoder Sensor Adjustment	Adjusts the position of the PF Loop Scale in relation to that of the PF Encoder Sensor.	---	---	---	p.309
Air Leak Check	Checks if air leak is occurring or not in the ink path after replacing the Ink Tube, Ink Cartridge Holder or Dampers, or after adjusting the Ink Cartridge Holder or Damper joints.	---	---	○	p.310

BASIC ADJUSTMENT

Adjustment	General Overview	Tool			Page
		AU*1	SM*2	AT*3	
RTC&USB ID&IEEE1394 ID	Initializes the RTC and writes USB ID and IEEE 1394 ID.	○	---	---	p.313
Head Rank ID	Writes a Head Rank ID.	○	---	---	p.314
Input Serial Number	Writes and reads the serial number.	○	---	---	p.315
T&B&S (Roll Paper)	Adjusts the print area on roll paper.	○	---	---	p.316
T&B&S + 980mm Band Feed	Corrects a paper feeding amount and adjusts the left, right, top and bottom margins.	○	---	---	p.318
Cutter Pressure Adjustment	Adjusts the paper cutting pressure.	○	○	---	p.320
Nozzle Bi-D Adjustment	Makes Bi-D adjustment for matte black nozzles, which can be used as a benchmark when making Bi-D adjustment for the other color nozzles.	○	---	---	p.321
Print Head Slant Adjustment (PF)	Prints an adjustment pattern to check if the Printhead is slanted in the PF direction and corrects the head angle.	○	---	---	p.322
Print Head Slant Adjustment (CR)	Prints an adjustment pattern to check if the Printhead is slanted in the CR direction and corrects the head angle.	○	---	---	p.325
Ink Mark Sensor Level Adjustment	Adjusts the light emitting amount of the Ink Mark Sensor.	○	---	---	p.328
Auto Uni-D Adjustment	Performs an automatic Uni-D adjustment by the Ink Mark Sensor.	○	---	---	p.329
Auto Bi-d Adjustment (P.G. 0.8/1.6)	Performs an automatic Bi-D adjustment by the Ink Mark Sensor. The platen gap to print an adjustment pattern can be selected between 0.8 and 1.6.	○	---	---	p.330
Ink Mark Sensor Adjustment for Auto Nozzle Check	Corrects the reading timing of the Ink Mark Sensor to detect dot missing status in main and sub scanning direction.	○	---	---	p.331
Skew Check	Feeds paper to check skew level of the paper.	○	---	---	p.333
Platen Position Adjustment	Adjusts the printing position for borderless printing.	○	---	---	p.334
980mm Band Feed Adjustment	Prints a 980-mm-length pattern to check the band-feed amount.	○	---	○	p.336
Initial Ink Charge Flag ON/OFF	A flag for initial ink charge can be set or cleared as necessary after replacing the Main Board.	○	---	---	p.337
NVRAM Back Up and Write	Backs up parameters stored on the NVRAM on the previous board, and writes them into the NVRAM on a new board.	○	---	---	p.338
Initial Ink Charge	Performs an initial ink charge.	○	---	---	p.339
Cleaning	Runs a cleaning.	○	---	---	p.339
Rear Sensor Adjustment	Gets AD values of a newly attached Rear Sensor to store them onto the Main Board as a standard of reading operation of the sensor.	---	○	○	p.340
Colorimetric Calibration (Color ID)	Adjusts the amount of ink droplets	○	---	○	p.341

ADVANCED ADJUSTMENT

Adjustment	General Overview	Tool			Page
		AU*1	SM*2	AT*3	
Auto Bi-D Adjustment	Performs an automatic Bi-D adjustment by the Ink Mark Sensor. The adjustment patterns are printed out with the platen gap set at 0.8 and 1.6.	○	---	---	p.357
Manual Bi-D Adjustment	Makes Bi-D adjustments for all nozzles.	○	---	---	p.358
Destination Setting	Makes the destination settings.	○	---	---	p.360
PF Micro Feed Adjustment (Bi-D)	Adjusts a paper feed amount to reduce bands appear on prints.	○	---	---	p.361

CHECK RESULTS

Adjustment	General Overview	Tool			Page
		AU*1	SM*2	AT*3	
Check Nozzle	Checks the nozzles for clogging.	○	---	---	p.362
Check Alignment	Checks the print alignment.	○	---	---	p.363
Print Adjustment Check Pattern	Prints all adjustment parameters and patterns.	○	---	---	p.364
Check Cutting	Performs a roll paper cutting operation. The cutter performance can be checked.	○	---	---	p.365
Print Image	Prints a sample image. Print quality can be checked.	○	---	---	p.366

RESET COUNTERS

Adjustment	General Overview	Tool			Page
		AU*1	SM*2	AT*3	
Reset PG Switching Counter	Resets the PG switching counter.	○	---	---	p.367
Reset PF Motor Counter	Resets the cumulative travel distance of the PF Motor.	○	---	---	p.367
Reset When CR Unit Change	Resets the cumulative number of “Pass” times of the CR Motor.	○	---	---	p.368
Reset When Cleaning Unit Change	Resets the life counter of the Cleaning Unit.	○	---	---	p.368
Reset When PrintHead Change	Resets the life counter of the Printhead.	○	---	---	p.369
Reset When Cutter Solenoid Change	Resets the counter of the Cutter Solenoid Unit.	○	---	---	p.369
Reset Pump Counter	Resets the counter of the Pump Unit.	○	---	---	p.370
Reset Ink Information	Resets ink information set for each nozzle column.	○	---	---	p.370

5.1.6 Tools for Adjustments

The table below shows the tools required for adjusting the Stylus Pro 7400/7800/9400/9800.

Table 5-3. Tools for Adjustments

Type	Name		Part Number	Remarks
Hard Tool	Ink Mark Sensor Position Jig *1		1424365	For adjusting, checking
	P THICK Sensor Position Jig *1		1424364	Thickness: 0.2/0.3/0.5/0.6
	Cutter Position Jig		1424366	---
	Air leak measurement jig		TBD	---
	Kimoto, Micro Trace #300		1057723	---
	Tension Gauge F770		1060744	---
	Tension Gauge (10N)		1401952	---
	Ink Cartridges (8 pcs.)*2		See Table 5-4	Consumables
	Maintenance Tank*2		C12C890191	Option
	Premium Glossy Photo Paper	24” (610 mm) (Stylus Pro 7400/7800)	S041638	EPSON genuine
		44” (1118 mm) (Stylus Pro 9400/9800)	S041640	EPSON genuine
	Doubleweight Matte Paper	24” (610 mm) (Stylus Pro 7400/7800)	S041385	EPSON genuine
		44” (1118 mm) (Stylus Pro 9400/9800)	S041387	EPSON genuine
Soft-ware	Adjustment Program		---	Supplies
	NVRAM backup utility		---	Supplies
	EPSON LFP Remote Panel tool		---	Supplies

Note "*1": The jig comes in a kit with multiple parts.

"*2": Use when make test prints for adjustment.

Table 5-4. Ink Cartridge

Ink Name	Part No. (Stylus Pro 7800/9800)	Part No. (Stylus Pro 7400/9400)
Photo Black	C13T562130	---
Matte Black	C13T566830	C13T566830
Cyan	C13T562230	C13T566230
Magenta	C13T562330	C13T566330
Yellow	C13T562430	C13T566430
Light Black	C13T562730	---
Light Cyan	C13T562530	---
Light Magenta	C13T562630	---
Light Light Black	C13T562930	---

5.1.7 Adjustment Program Basic Operations

This section describes the basic operations of the Adjustment Program.

CAUTION

The Adjustment Program includes some adjustment items which should not be performed at on-site service. Be sure not to perform any adjustments that are not described in this manual at on-site service.

☐ System Requirements

- OS: Windows 98SE, Me, 2000, XP
- Interface: USB
- The printer driver and EPW3 must have been installed.

☐ Startup

1. Double-click on “adjwiz2.exe” to start the Adjustment Program.
2. A startup screen will appear. Select the printer name and the port.
   - Printer Name (and the port)
     Stylus Pro 7400, Stylus Pro 7800, Stylus Pro 9400, Stylus Pro 9800
   - Mode
     Select the mode between the sequential and individual modes.
3. Click the [Start] button.

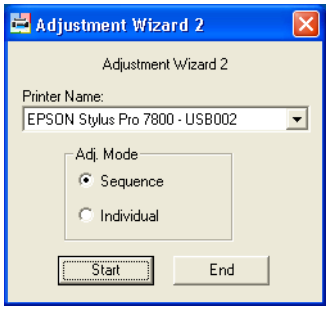

Figure 5-1. Adjustment Program Startup Screen

☐ Sequential mode

By selecting a part you replaced or repaired, this mode guides you to perform all the required adjustments in a predetermined sequence.

1. Highlight the part you replaced or repaired in the left box and click the [Add] button.
2. Click the [OK] button.

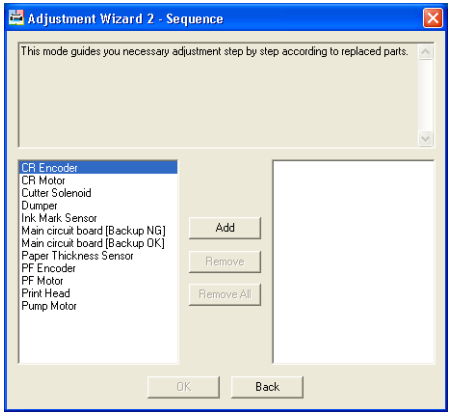

Figure 5-2. Sequential Mode

☐ Individual mode

This mode allows you to select and perform an adjustment individually.

1. Highlight the target adjustment item and click the [OK] button.

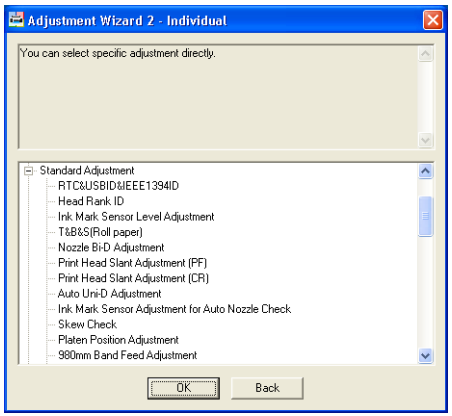

Figure 5-3. Individual Mode

5.2 Mechanical Adjustment

5.2.1 Ink Mark Sensor Height Adjustment

This adjustment is intended to adjust the gap between the Ink Mark Sensor and the platen.

- Required Tool

  Ink Mark Sensor Position Jig (for the adjustment and verification)

- Procedure

  1. Set the adjustment jig on the platen at home side by putting the four legs of the jig into the paper suction holes as shown in Figure 5-4. Then move the Carriage Unit slowly until the Ink Mark Sensor comes on the jig.
  2. Loosen the screw that secures the Ink Mark Sensor to the Carriage Unit as shown in Figure 5-5, and adjust the position of the sensor so that it contacts with the jig. Then tighten the screw.
  3. Set the jig for verification to the position shown in Figure 5-4, and move the Carriage Unit slowly until the Ink Mark Sensor comes on the jig. Then check that the sensor slightly contacts with the elevated portion of the jig.

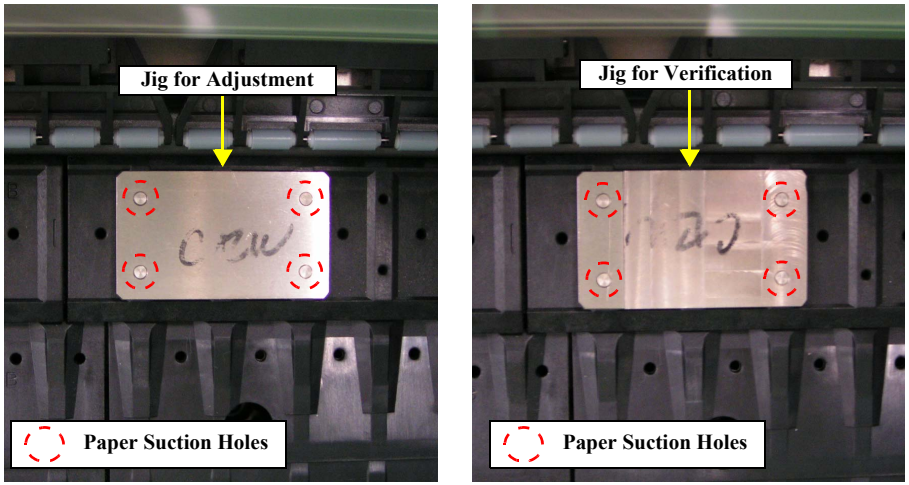

Figure 5-4. Jig Setting Positions

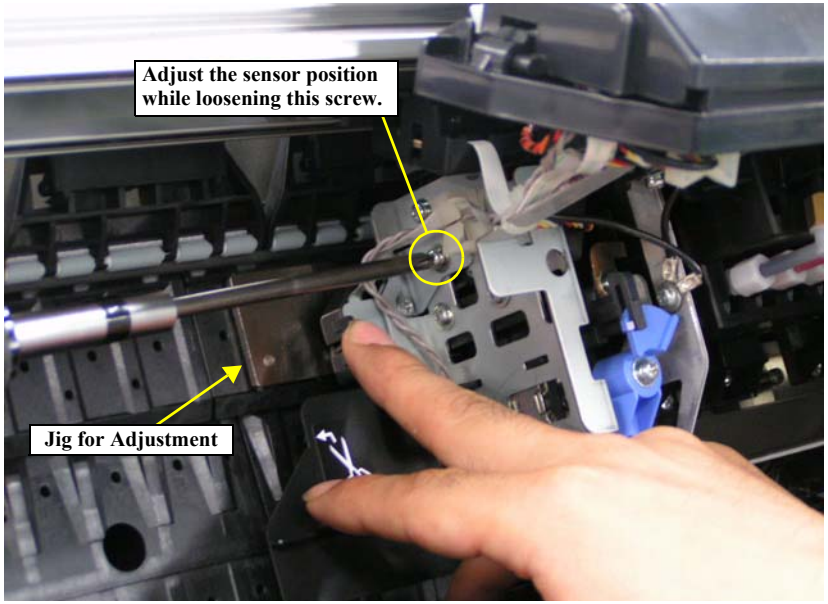

Figure 5-5. Ink Mark Sensor Height Adjustment (1)

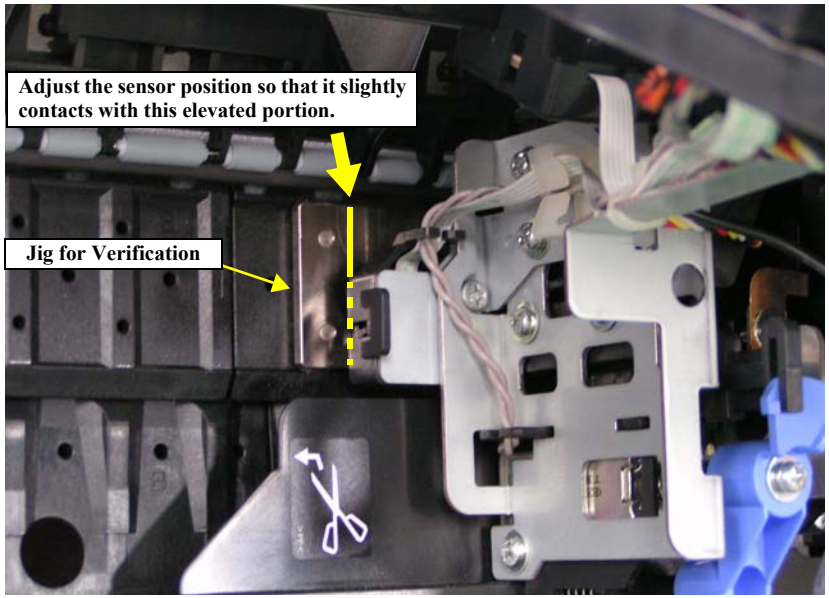

Figure 5-6. Ink Mark Sensor Height Adjustment (2)

5.2.2 Cutter Position/Height Adjustment

This adjustment allows you to adjust the position and height of the cutter in relation to the elevated portions on the platen provided for the cutter.

- Required Tool

  Cutter Position Jig

- Procedure

  1. Set the cutter position jig on the sub-platen at home side by putting the two legs of the jig into the paper suction holes as shown in Figure 5-7. Then move the Carriage Unit slowly until the Cutter Unit comes on the jig.
  2. Loosen the five screws shown in Figure 5-8 that secure the Cutter Unit to the Carriage Unit so that the Cutter Unit position can be adjusted.
  3. Adjust the position of the Cutter Unit so that its bottom and left edges align with those of the positioning jig, and press the unit against the jig to make them in absolute contact with one another as shown in Figure 5-9. Then secure the Cutter Unit with the screw loosened in Step 2.

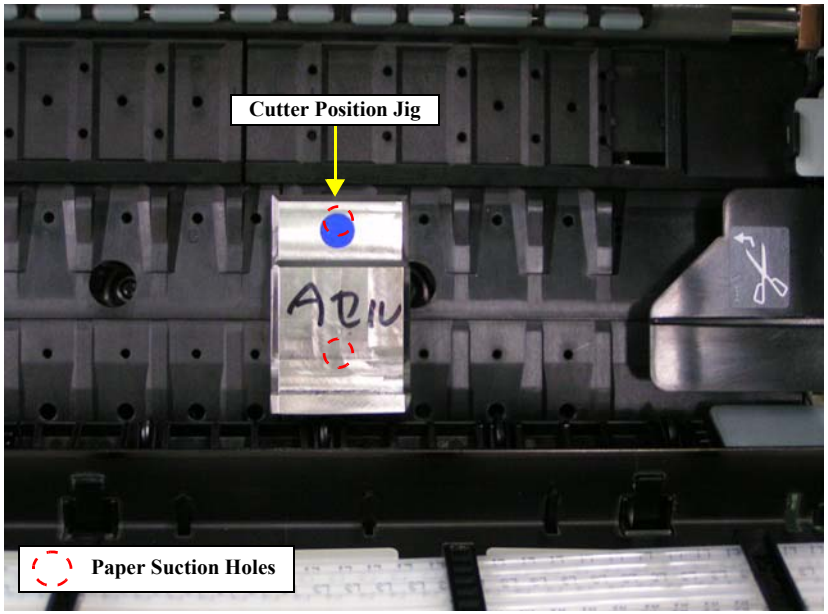

Figure 5-7. Jig Setting Position

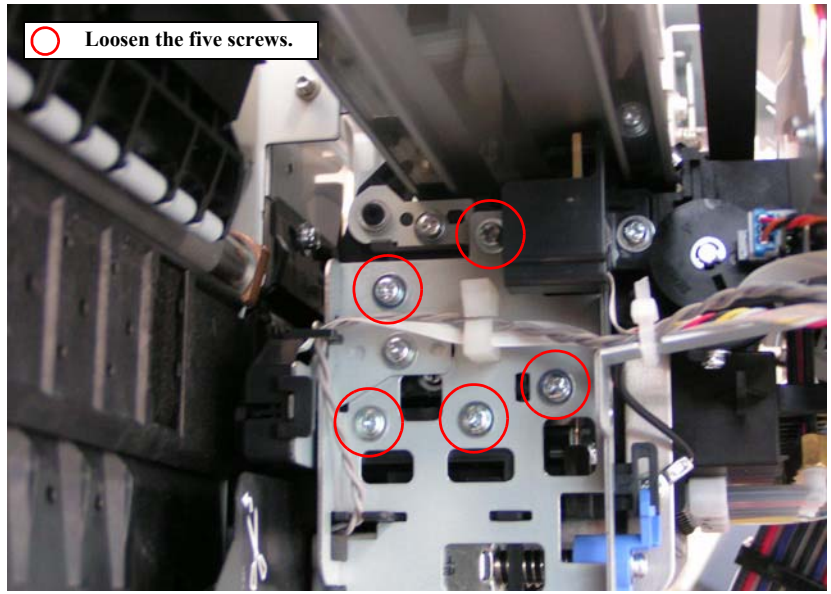

Figure 5-8. Cutter Position/Height Adjustment (1)

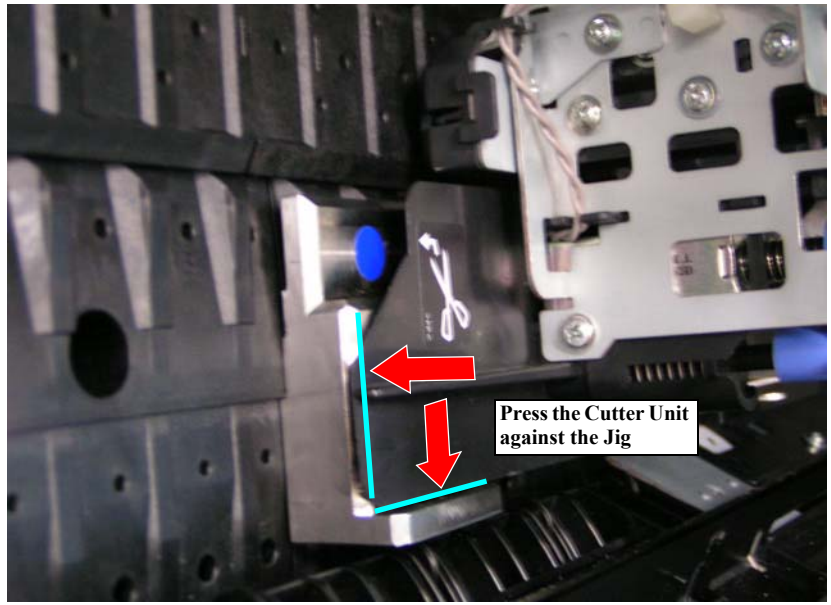

Figure 5-9. Cutter Position/Height Adjustment (2)

5.2.2.1 Paper Cutting Position Check

You can verify whether the cutter position adjustment described in the previous section was made properly or not by actually cutting paper with the cutter.

- ■ Cutter position verification

☐ Procedure

1. Load a cut sheet of plain paper (A4 size or smaller; minimum allowable size is 10 (W) x 20 (H) cm) on the home side along with the paper setting position, and press the Paper Set Lever down to secure the sheet.
2. Move the Carriage Unit with your hand to the right edge of the loaded sheet, and press the Cutter down manually.
3. While holding down the bottom edge of the sheet with your hand, cut the sheet with the cutter.
4. Place the gauge whose minimum measurement unit is 0.5 mm on the edge of the elevated portion for the cutter on the sub-platen and verify that the gap between the edge and the actual cut line is within 0.5 mm (with a tolerance of -0.3 to +0.2 mm).
5. If the gap is out of the specified range, readjust the cutter position using the cutter position jig.

CHECK POINT

The distance from the edge of the elevated portion for the cutter on the sub platen to the actual cut line of paper should be within 0.5 mm with tolerance of -0.3 to +0.2 mm.

6. Perform the same verification at the anti-home side. Load a cut sheet on the anti-home side, cut it by manually moving the cutter and measure the gap between the edge of the elevated portion for the cutter and the actual cut line. If the gap is out of the specified range, readjust the cutter position using the cutter position jig.

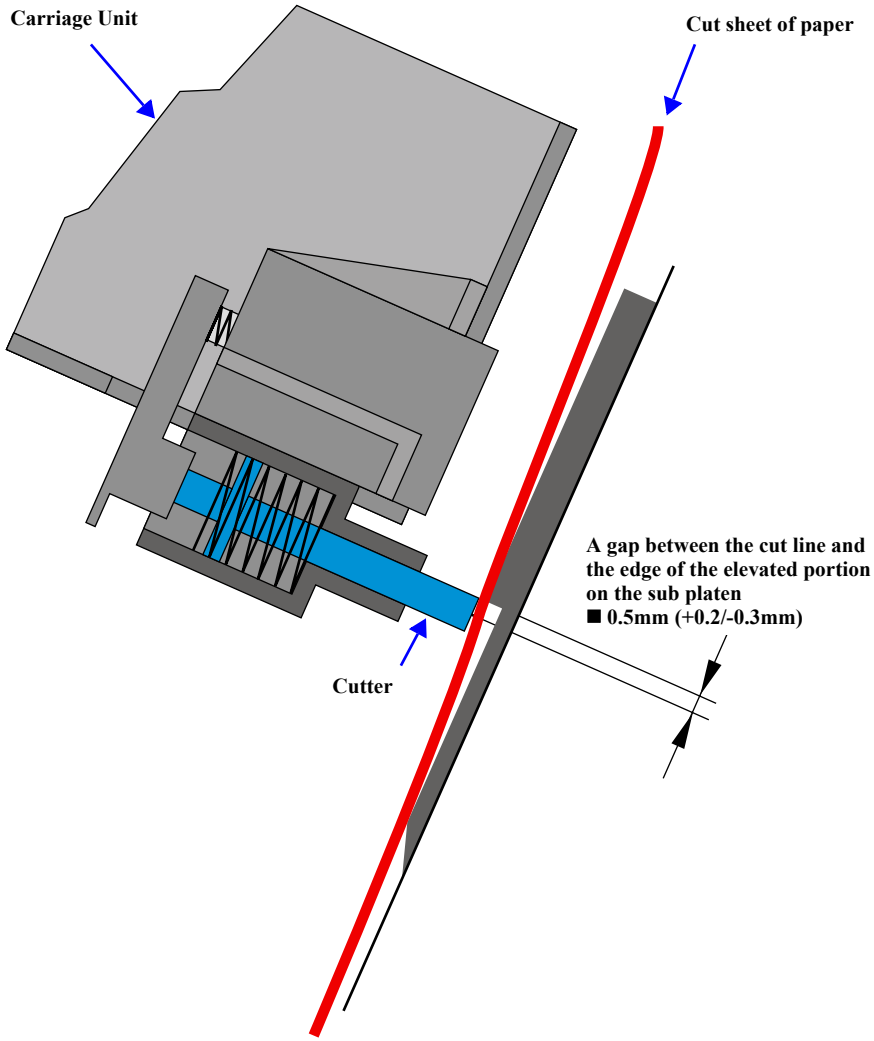

Cut_posi01.eps

Figure 5-10. Paper Cutting Position Check

5.2.3 Paper Thickness Sensor Position Adjustment

After the P THICK 1 and 2 sensors are replaced, the newly attached sensors must be checked for their detection accuracy as it varies depending on the attaching position. The sensor attaching position can be checked by the Self Testing menu and conduct this adjustment only when the test result is NG.

☐ Required Tool

P THICK Sensor Position Jig (0.2/0.3/0.5/0.6)

☐ Check Procedure

CAUTION !

The following tests must be conducted with the Paper Set Lever pressed down.

1. Enter into the Serviceman Mode.

   Turn the printer ON while holding down the **[Paper Source ◀], [Menu ▶], and [Paper Feed ▼]**.
2. Select "SELF TESTING: Test" to enter the Self Testing menu.

   [Menu ▶]
3. Select "Test: Sensor".

   [Paper Feed ▼] twice → [Menu ▶] → [Paper Feed ▼] once
4. Make sure that the Paper Set Lever is pressed down and check that "Sensor: Paper 00" is displayed on the LCD panel. If the displayed value is other than the "00", the sensor position adjustment must be carried out.
   →Adjustment Procedure
5. Release the Paper Set Lever to set the P THICK Sensor Position Jig (0.2) to the position shown in Figure 5-11, and press the Paper Set Lever down. Check that "Sensor: Paper 00" is displayed on the LCD panel.
   If the displayed value is other than the "00", the sensor position adjustment must be carried out.
   →Adjustment Procedure
6. Release the Paper Set Lever to set the P THICK Sensor Position Jig (0.3) to the position shown in Figure 5-11, and press the Paper Set Lever down. Check that "Sensor: Paper 10" is displayed on the LCD panel.
   If the displayed value is other than the "10", the sensor position adjustment must be carried out.
   →Adjustment Procedure
7. Release the Paper Set Lever to set the P THICK Sensor Position Jig (0.5) to the position shown in Figure 5-11, and press the Paper Set Lever down. Check that "Sensor: Paper 10" is displayed on the LCD panel.
   If the displayed value is other than the "10", the sensor position adjustment must be carried out.
   →Adjustment Procedure
8. Release the Paper Set Lever to set the P THICK Sensor Position Jig (0.6) to the position shown in Figure 5-11, and press the Paper Set Lever down. Check that "Sensor: Paper 11" is displayed on the LCD panel.
   If the displayed value is other than the "11", the sensor position adjustment must be carried out.
   →Adjustment Procedure
9. Release the Paper Set Lever and check that "Sensor. Paper 01" is displayed on the LCD panel.
10. After all the checking and adjustment are completed, perform the sensor self testing again to ensure that the sensor position is set properly.

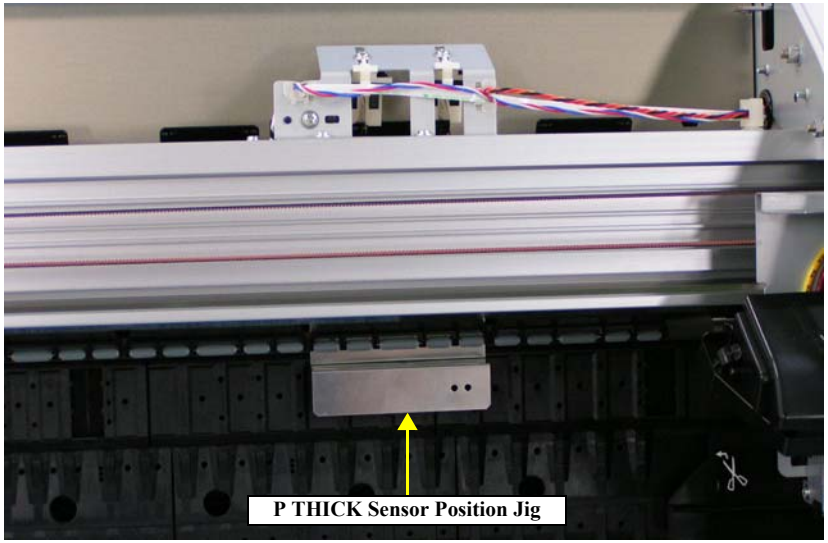

Figure 5-11. Paper Thickness Sensor Position Adjustment (1)

☐ Adjustment Procedure

Adjust the position of the P THICK Sensor 1 holder when the self testing with the 0.2 or 0.3 jig resulted in NG, or when you do not have the 0.2 and 0.3 jigs. Adjust the position of the P THICK Sensor 2 holder when the self testing with 0.5 or 0.6 jig resulted in NG, or when you do not have the 0.5 and 0.6 jigs.

1. Loosen the screw that secures the P THICK Sensor Holder.
2. Slightly slide the holder back and forth while watching the value displayed on the LCD panel. Stop the holder immediately after the target value is displayed.

CHECK POINT

Slide the holder toward you to increase the value and slide it backward to decrease the value.

3. Secure the holder by tightening the screw.

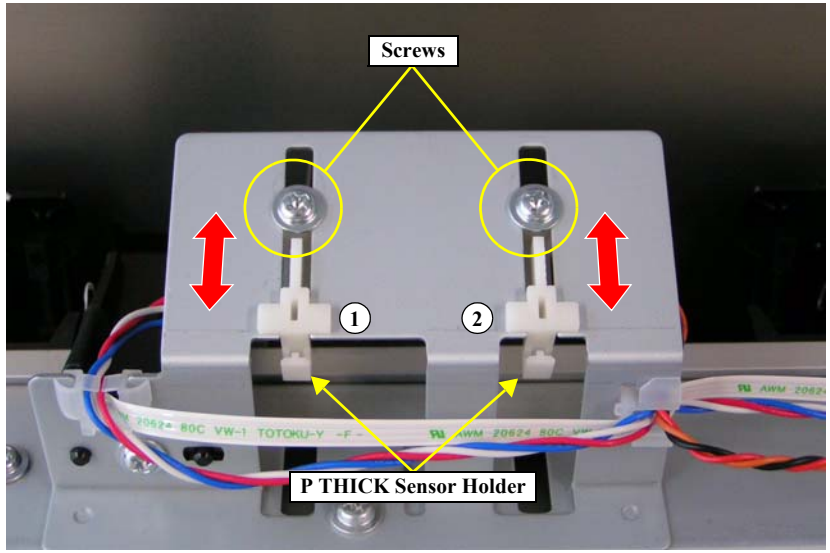

Figure 5-12. Paper Thickness Sensor Position Adjustment (2)

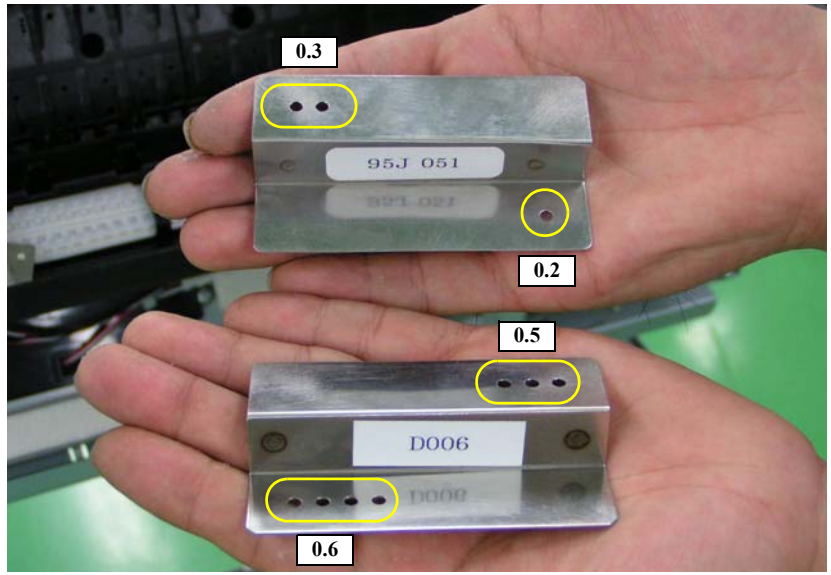

Figure 5-13. P THICK Sensor Position Jigs

5.2.4 CR Timing Belt Tension Adjustment

Whenever the CR Motor Assy. or the CR Timing Belt is reattached or replaced, or the CR Timing Belt tension is released, this adjustment must be carried out to apply proper tension to the CR Timing Belt.

- ☐ No tool is required
- ☐ Procedure
  1. Turn the CR Tension screw until the tension indicating tab locates right at the center of the tick marks (between the two long ticks) on the CR Tension bracket.
  2. After the adjustment, apply thread-locker to the CR Tension screw.

CHECK POINT

Whether the CR Timing Belt tension has been adjusted or not can be judged by whether the thread-locker is applied or not.

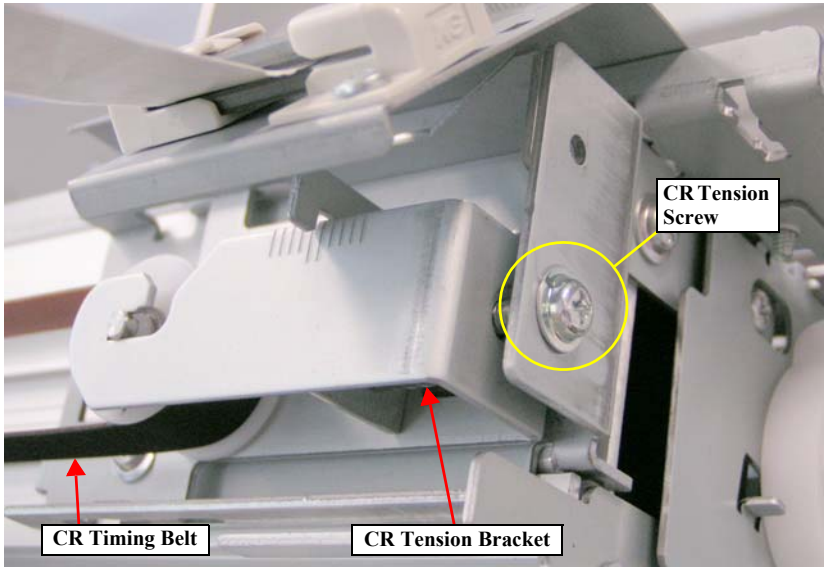

Figure 5-14. CR Timing Belt Tension Adjustment

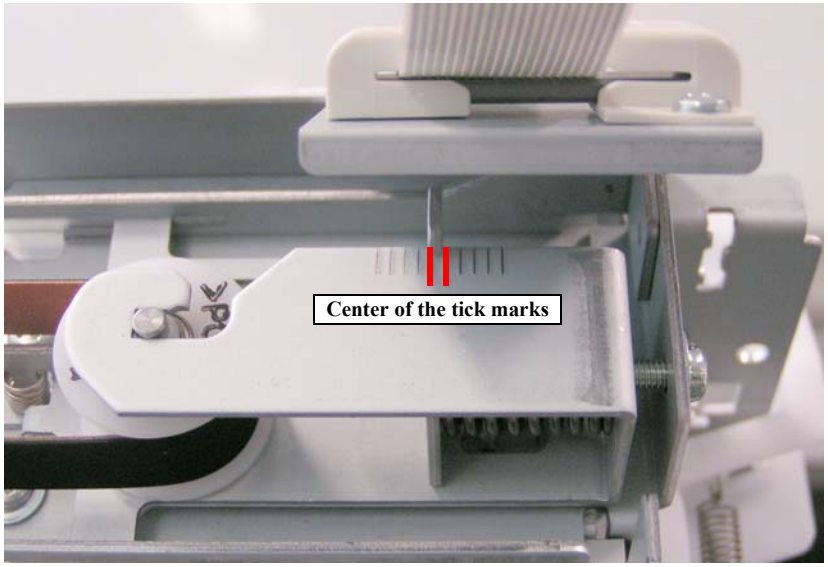

Figure 5-15. Setting Position on Tick Marks

5.2.5 PF Timing Belt Tension Adjustment

Whenever the PF Motor Assy. is reattached or replaced, or the PF Timing Belt is released, this adjustment must be carried out to apply proper tension to the PF Timing Belt with the tension gauge.

- ☐ Required Tool

  Tension gauge F770

- ☐ Standard tension

  2,200g ± 10% (tension in the moving direction of the PF Motor Mounting Plate)

- ☐ Procedure

  1. Loosen the four screws that secure the PF Motor Mounting Plate.
  2. Hitch the tip of the tension gauge to the hole on the PF Motor Mounting Plate.
  3. Pull the gauge in the direction of the arrow shown in Figure 5-16 until the standard tension is obtained. And first tighten the two of the four screws located diametrically opposite each other.
  4. Then tighten the remaining two screws.

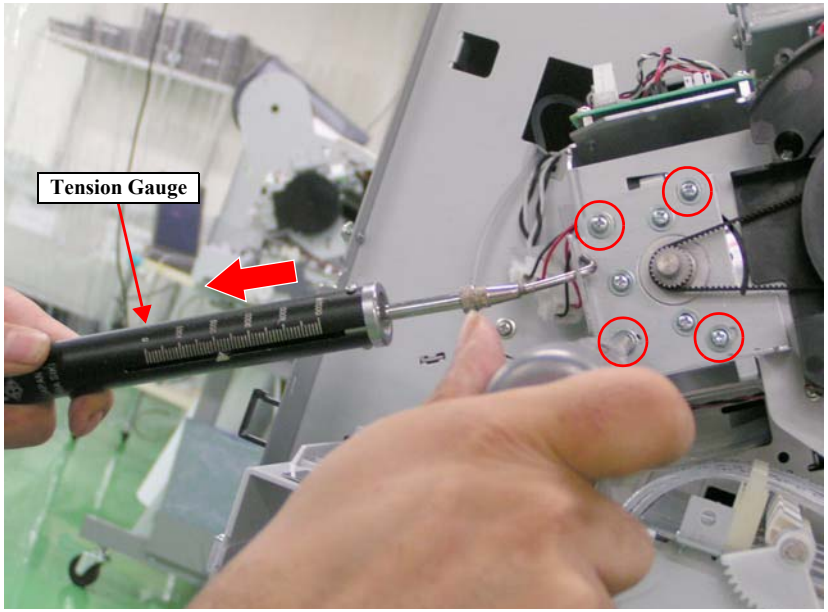

Figure 5-16. PF Timing Belt Tension Adjustment

5.2.6 CR Encoder Sensor Adjustment

This adjustment is intended to maintain a proper gap between the CR Encoder Sensor and the CR Scale.

- ☐ No tool is required
- ☐ Procedure
  1. Move the Carriage from the home to the anti-home side to visually check if the CR Scale comes into contact with the CR Encoder Sensor as shown in Figure 5-17.
  2. If the contact is observed, loosen the screw that secures the CR Encoder Sensor to adjust the sensor position not to contact with the CR Scale, and tighten the screw.
  3. Verify the sensor position by moving the Carriage from the home to anti-home side.

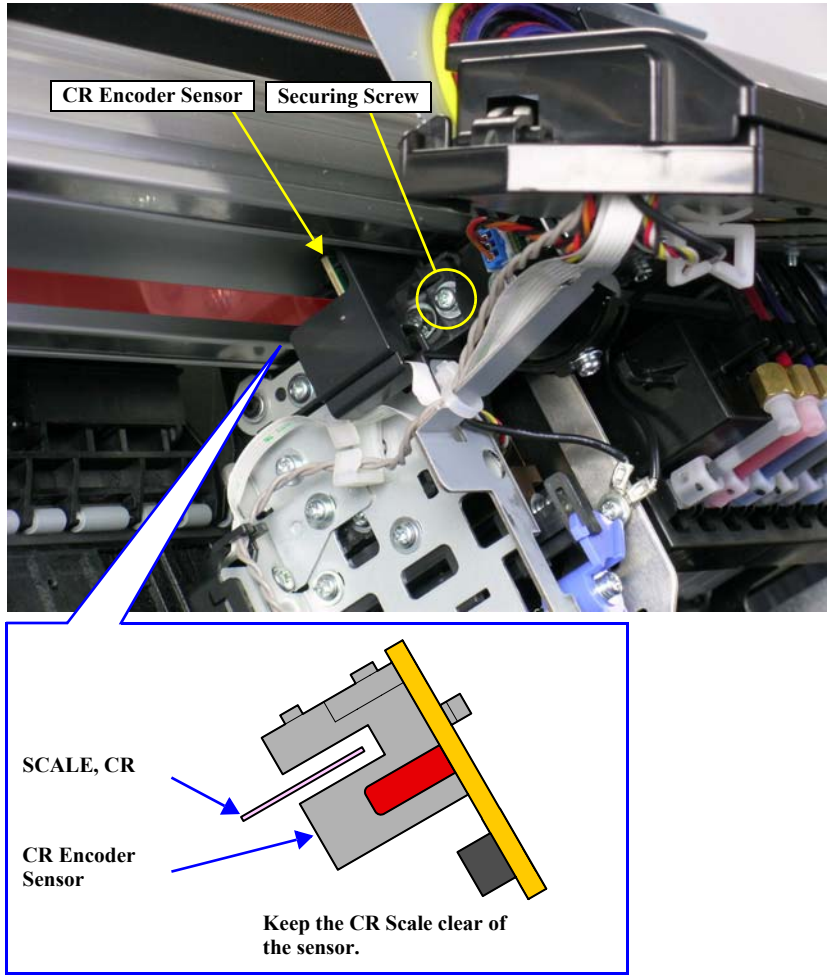

Figure 5-17. CR Encoder Sensor Adjustment

5.2.7 PF Encoder Sensor Adjustment

This adjustment is intended to maintain a proper gap between the PF Encoder Sensor and the PF Loop Scale.

- ☐ No tool is required
- ☐ Procedure
  1. Loosen the two screws that secure the PF Encoder Mounting Plate. Adjust the plate position visually so that the PF Loop Scale runs through the center of the slit of the PF Encoder Sensor.

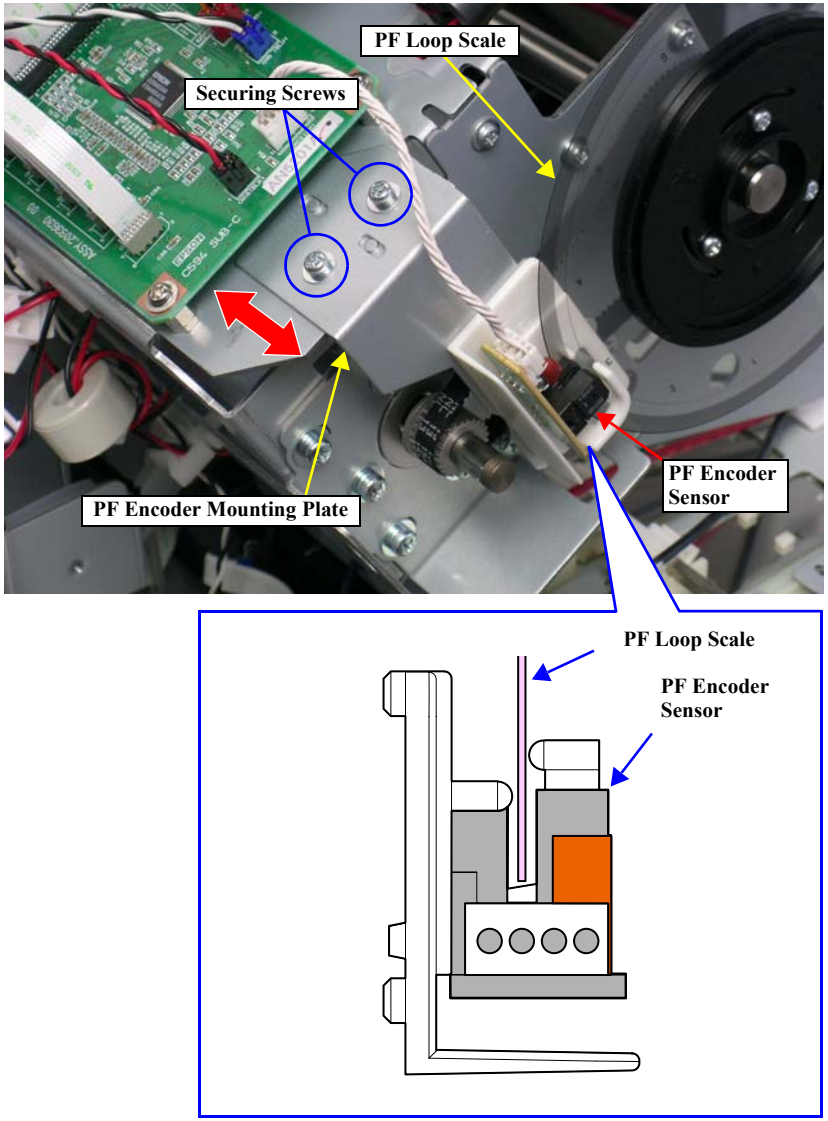

Figure 5-18. PF Encoder Sensor Adjustment

5.2.8 Air Leak Check

The ink supply path should be checked for air leaks whenever the Ink Tube, Ink Cartridge Holder or Dampers are replaced, or the joint of the Ink Cartridge Holder and the Damper is once loosened and retightened.

CAUTION

Do not touch or press the regulator located under the regulator guard plate.

- Required Tool

  Air Leak Measurement Jig (with digital pressure gauge GC66)

- Procedure

  1. Remove the seal cap of the Measurement Cartridge.
  2. Insert the Measurement Cartridge into the Ink Cartridge Slot of the printer and lower the Ink Lever.
  3. Press the green button on the pressure gauge to turn the gauge ON.

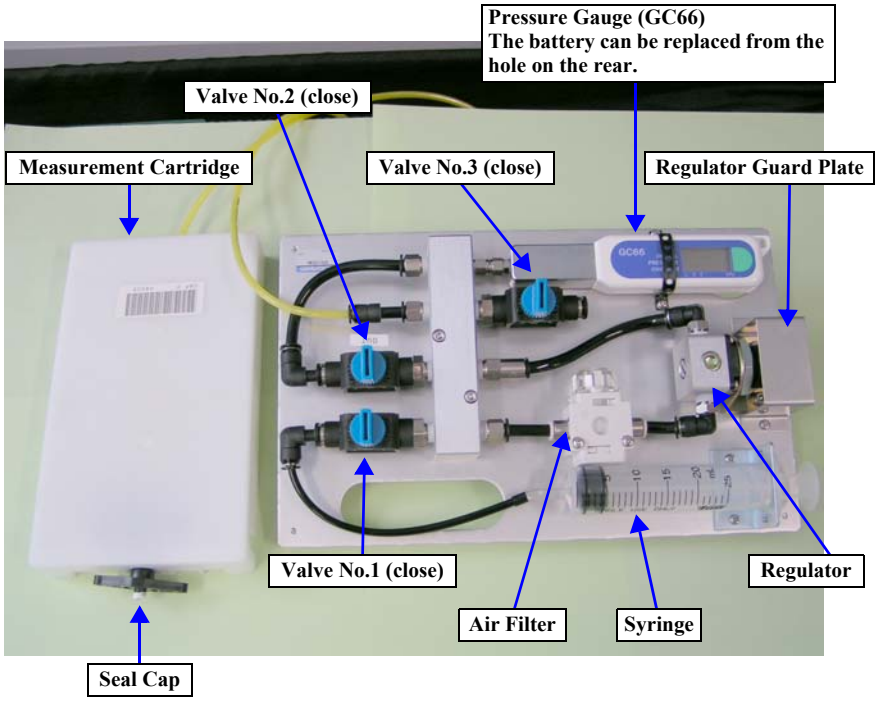

Figure 5-19. Air Leak Measurement Jig Kit

4. Open the Valve No.2 and No.3 to reduce the pressure inside the measurement jig.
5. Check that “0.0” kPa is displayed on the gauge.
6. Close the Valve No.3 and pull the piston head of the syringe.

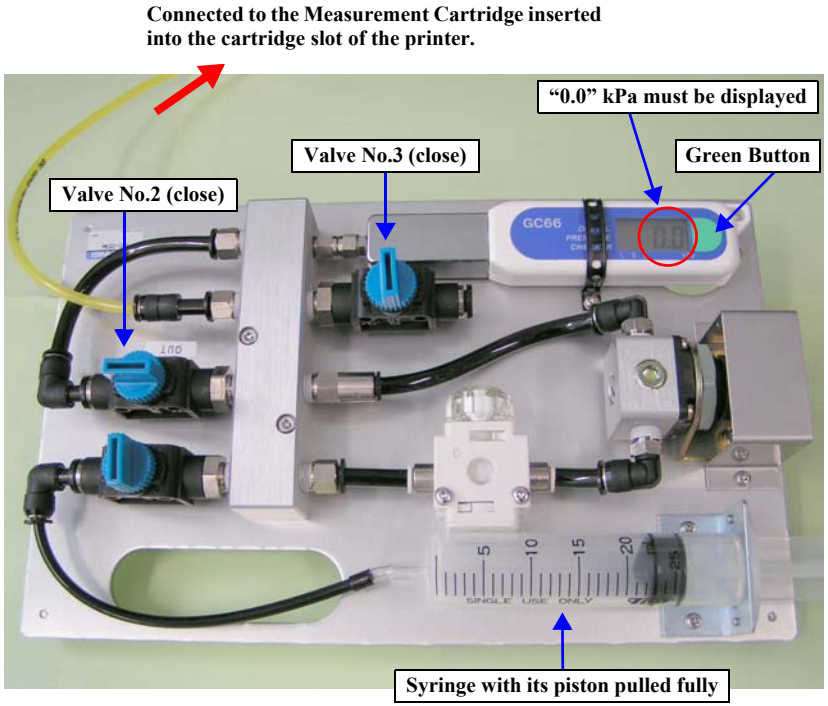

Figure 5-20. Air Leak Check (1)

7. Open the Valve No.1 and push the piston head of the syringe.
8. Verify that the value displayed on the gauge is within the range of 36 to 42 kPa.
9. Close the Valve No.2. Write down the value displayed on the gauge after the Valve No.2 is closed, and leave the jig for about three minutes.
10. Compare the value displayed after a lapse of three minutes with the value written down in Step 9. A difference within 0.4 kPa is judged as OK (no air leaks). A difference greater than 0.4 kPa is regarded as an evidence of air leaks. Check the Damper joint for looseness or any other abnormalities, and correct it if necessary. Then perform Step 4 to 10 again.
11. After verifying that the difference is within 0.4 kPa, open the Valve No.3 to reduce the pressure inside the jig.
12. Disconnect the Measurement Cartridge from the Ink Cartridge Slot after the gauge displays 0.0 kpa.
13. Put the seal cap onto the Measurement Cartridge.
    Perform the above air leak check for each of the all Ink Cartridge Slots of the printer.
14. When the air leak check of the all Ink Cartridge Slots is completed, press the green button on the gauge for four to five seconds to turn the gauge OFF.
15. Close the Valve No.1, No.2 and No.3.

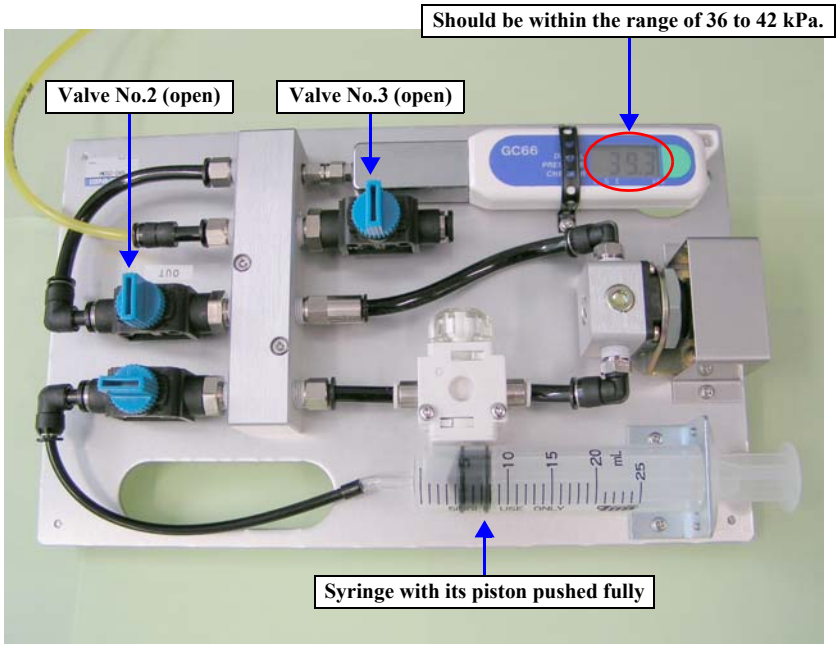

Figure 5-21. Air Leak Check (2)

5.3 Basic Adjustment

5.3.1 RTC&USB ID&IEEE1394 ID

This allows you to write date and time to be maintained by the RTC, USB ID and IEEE1394 ID to the newly mounted Main Board.

☐ Procedure

1. After replacing the Main Board, write down the 10-digit ID (IEEE1394 ID) on the ID label affixed on the right frame of the printer.
2. Turn the printer ON.
3. Start up the Adjustment Program and select [RTC&USB ID&IEEE1394 ID].
4. Check if the date and time displayed on the screen is correct. Enter the date and time if necessary.
5. Enter the 10-digit serial number of the printer. USB ID is automatically created according to the serial number.
6. Enter the 10-digit IEEE1394 ID written down in Step 1 into the box.
7. Click the [Write] button to write the information entered into the boxes onto the NVRAM on the new Main Board.
8. Click the [Next] button to display a confirmation screen. All the information written on the NVRAM is displayed on the screen. Confirm the information and click [OK].
9. Click the [Finish] button.

CAUTION !

If the printer is turned OFF and back ON after changing the USB ID, the computer (Windows) detects the USB port used to connect the printer as a new port and automatically copies the printer driver as xxxx (copy x). If you need to perform another adjustment using the Adjustment Program, exit out of the program and select the "copy x" driver, then restart the program.

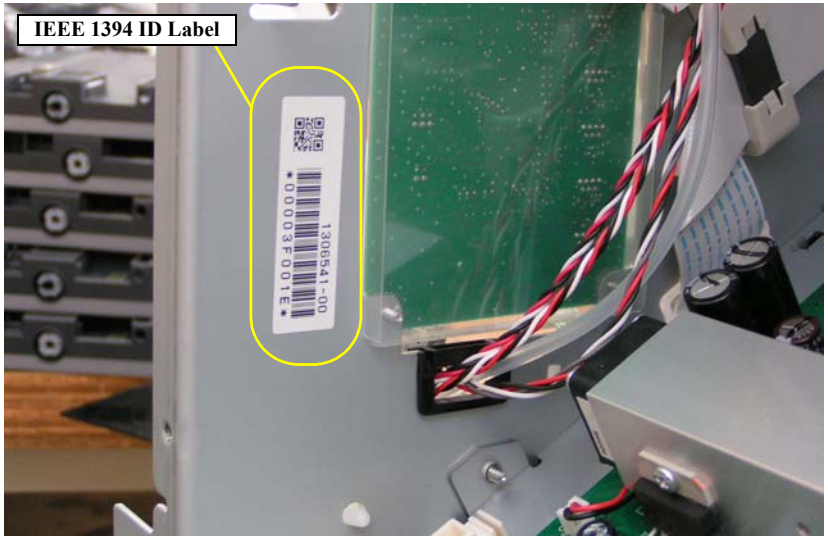

Figure 5-22. IEEE 1394 ID Label

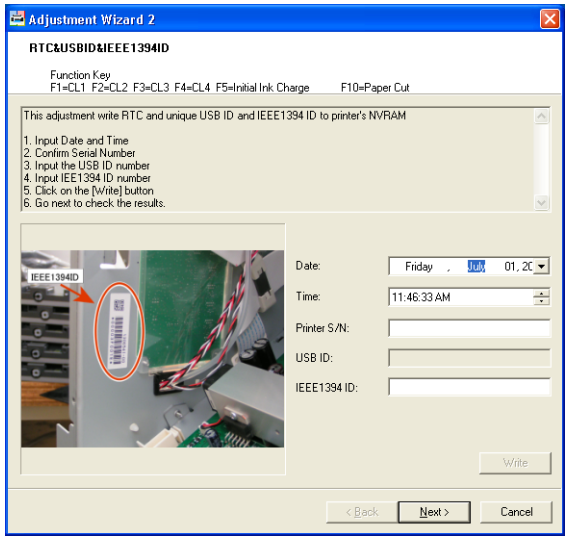

Figure 5-23. [RTC&USB ID&IEEE1394 ID] Screen

5.3.2 Head Rank ID

Every printhead has its own Head Rank ID which compensates unit-to-unit variation. Whenever the printhead is replaced, the Head Rank ID of the new printhead must be written using this menu.

☐ Procedure for Writing

<Entering the ID manually>

1. Turn the printer ON.
2. Start up the Adjustment Program and select [Head Rank ID].
3. Write down the 40-digit Head Rank ID (QR code) indicated on the ID label affixed to the new Printhead.
4. Enter the 40-digit ID into the edit boxes in the same way as indicated on the label (eight digits per each edit box).
5. Click the [Write] button.
6. Click the [Finish] button.

☐ Procedure for Writing

<Entering the ID using a file (txt) obtained from the new printhead>

1. Turn the printer ON.
2. Start up the Adjustment Program and select [Head Rank ID].
3. Click the [File Open] and select a Head Rank ID Information file (txt).
4. Click the [Write] button.
5. Click the [Finish] button.

☐ Procedure for Storing the Head Rank ID Information as a File

1. Turn the printer ON.
2. Start up the Adjustment Program and select [Head Rank ID].
3. Write down the 40-digit Head Rank ID (QR code) indicated on the ID label affixed to the new Printhead.
4. Enter the 40-digit ID into the edit boxes in the same way as indicated on the label (eight digits per each edit box).
5. Click the [File Save] and save the ID information under a new file name.
6. Click the [Finish] button.

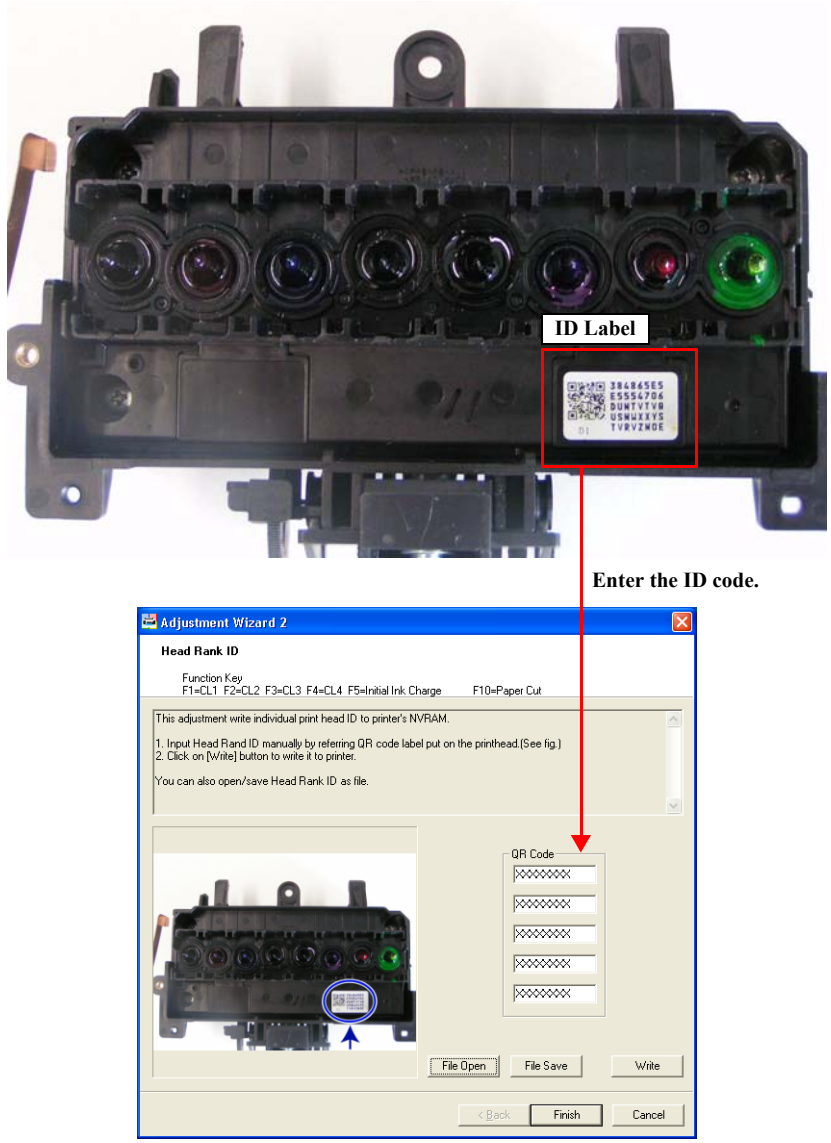

Figure 5-24. [Head Rank ID] Screen

5.3.3 Input Serial Number

This allows you to write the serial number of the printer onto the NVRAM. And the stored serial number can be read and displayed for verification.

☐ Procedure

1. Turn the printer ON.
2. Start up the Adjustment Program and select [Input serial number].
3. Enter the 10-digit serial number of the printer and click the [Write] button.
4. The serial number is written onto the NVRAM on the Main Board.
5. Click the [Read] button to display the stored serial number.

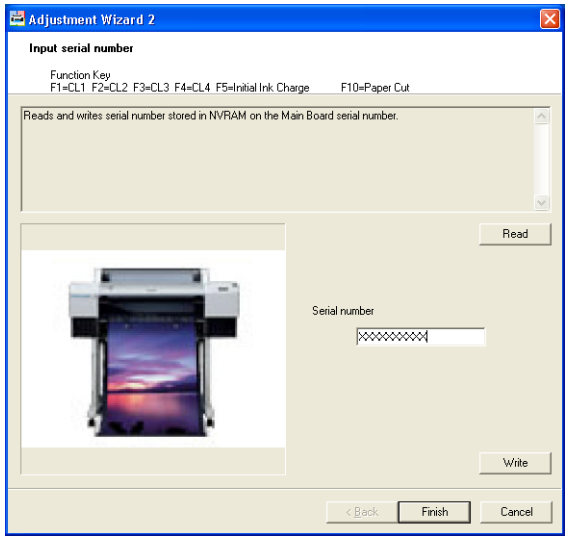

Figure 5-25. [Input Serial Number] Screen

5.3.4 T&B&S (Roll Paper)

The print area on roll paper including the cutoff position, and the light emitting timing of the Ink Mark Sensor in main scanning direction can be adjusted using this menu.

- Paper Used
  - Size: 24” (Stylus Pro 7400/7800)
    44” (Stylus Pro 9400/9800)
  - Type: Doubleweight Matte Paper
- Specifications
  - Top margin: 10 ± 1 mm
  - Bottom margin: 14 ± 1 mm
  - Side margin: 10 ± 0.3 mm
- Procedure

1. Start up the Adjustment Program and select [T&B&S (Roll Paper)].
2. Click the [Print] button to print the adjustment pattern.
3. Referring to Figure 5-27, measure the distance of the following three points.
   - Top and bottom margins

     Check the direction of the arrow beside the “T&B Position” printed on the bottom right of the adjustment pattern print. If the arrow is right-pointing, measure the top and bottom margin width on the right side of the adjustment pattern, and if it is left-pointing, measure those on the left side of the pattern as shown in Figure 5-27.
   - Side margin

     Measure the side margin width indicated on Figure 5-27.
4. Enter the following values into the corresponding edit boxes. (The words inside the parentheses indicate the names displayed on the screen.)
   - Values measured in Step 3
     - Top margin (Top Margin)
     - Bottom margin (Bottom Margin)
     - Side margin (Side Margin)
   - Values printed under the pattern
     - Ink Mark Sensor Left (MS Left)
     - Ink Mark Sensor Right (MS Right)
5. Click the [Write] button and then click the [Print] button to print the adjustment pattern again.
6. Perform Step 3 and Step 4 and click the [Write] button.
7. After confirming that the all values are within the specified range, click the [Finish] button.
   If they are not, perform Step 3 to Step 5 again.

CAUTION

Be sure to place the adjustment pattern print on a flat surface when performing the measurement.

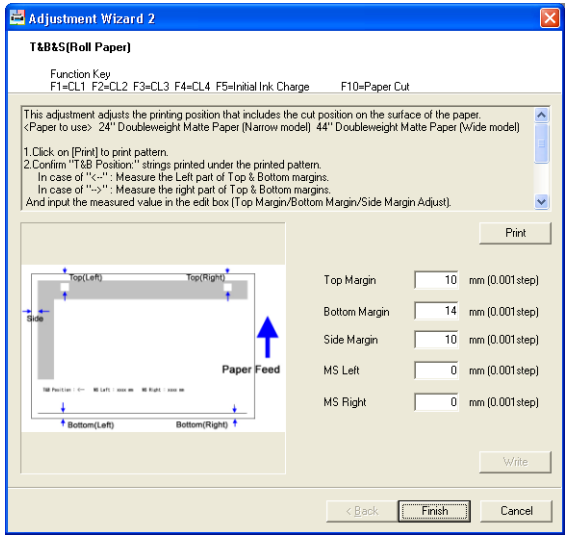

Figure 5-26. [T&B&S (Roll Paper)] Screen

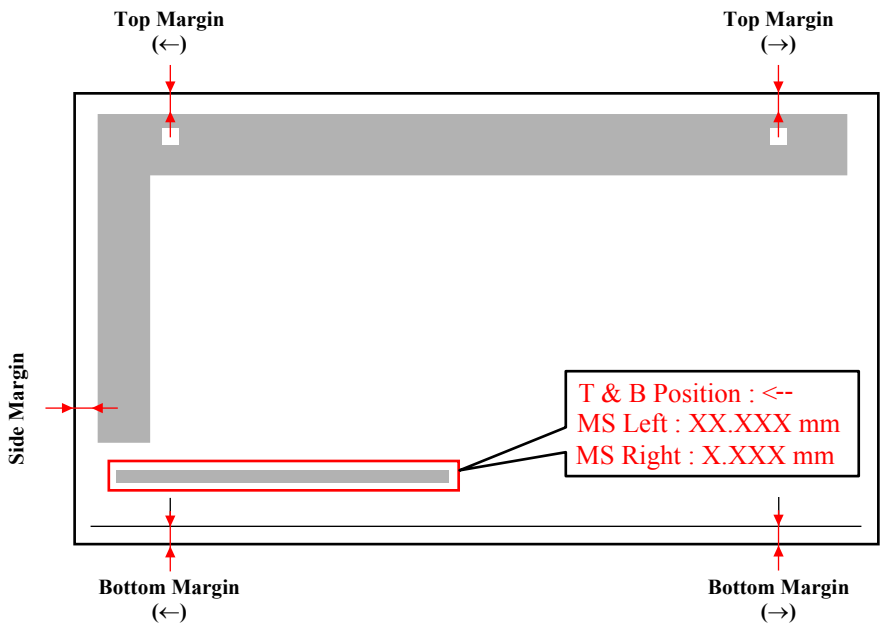

Figure 5-27. Adjustment Pattern

5.3.5 T&B&S + 980mm Band Feed

Paper feeding amount and the left, right, top and bottom margins can be adjusted using this menu.

- Paper Used
  - Size: 24” (Stylus Pro 7400/7800)
    44” (Stylus Pro 9400/9800)
  - Type: Doubleweight Matte Paper
- Specifications
  - Top margin: 10 ± 5 mm
  - Bottom margin: 14 ± 5 mm
  - Side margin: 10 ± 5 mm
  - 980mm feed: 980mm ± 10 mm
- Procedure
  1. Start up the Adjustment Program and select [T&B&S + 980mm Band Feed].
  2. Click the [Print] button to print the adjustment pattern.
  3. Referring to Figure 5-29, measure the distance of the following four points.
     - Top margin
     - Bottom margin
     - Side margin
     - Band-feed amount
  4. Enter the values measured in Step 3 into the corresponding edit boxes. (The words inside the parentheses indicate the names displayed on the screen.)
     - Top margin (Top Margin)
     - Bottom margin (Bottom Margin)
     - Side margin (Side Margin Adjust)
     - Band-feed amount (980mm Feed)
  5. Click the [Write] button and then click the [Print] button to print the adjustment pattern again.
  6. Perform Step 3 and Step 4 and click the [Write] button.
  7. After confirming that the all values are within the specified range, click the [Finish] button.
     If they are not, perform Step 3 to Step 5 again.

CAUTION

Be sure to place the adjustment pattern print on a flat surface when performing the measurement.

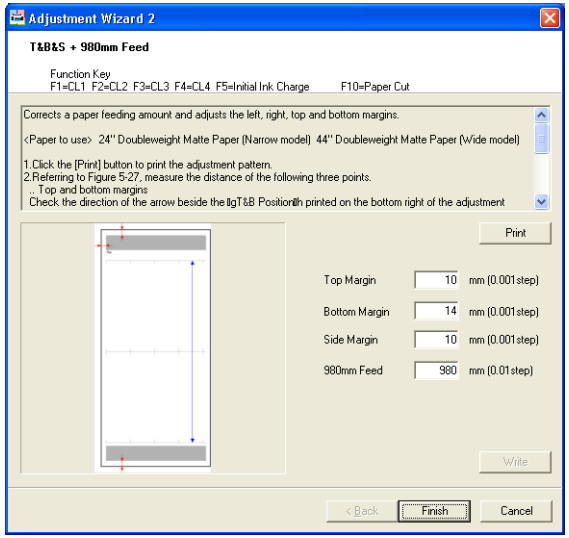

Figure 5-28. T&B&S (Roll Paper) + 980mm Band Feed Screen

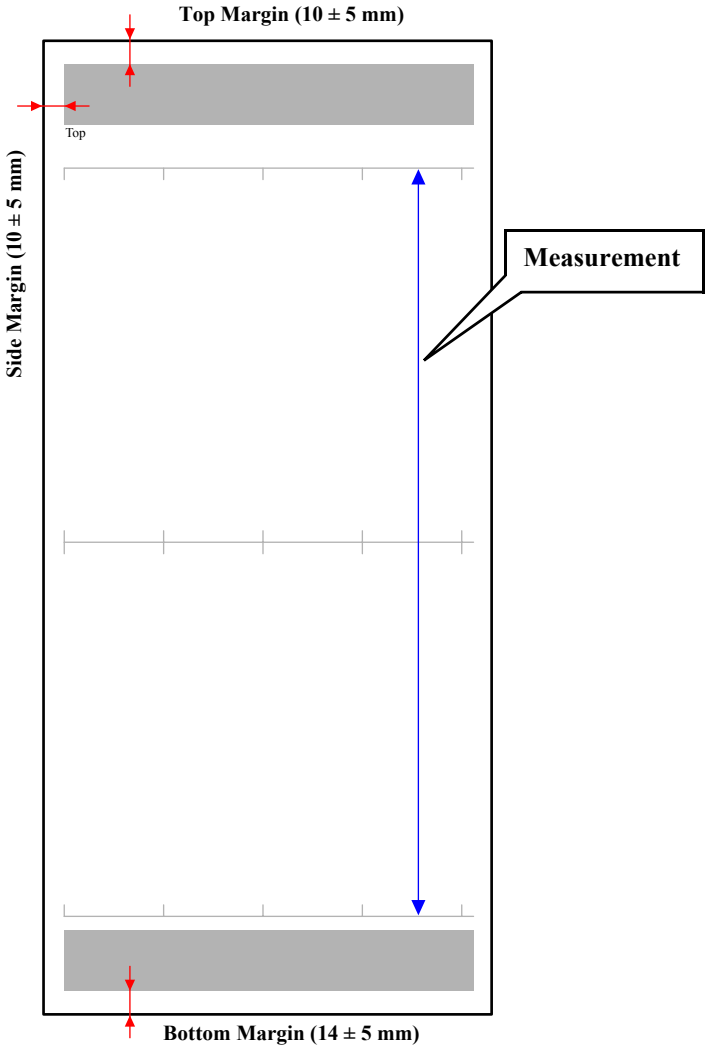

Figure 5-29. Adjustment Pattern

5.3.6 Cutter Pressure Adjustment

Whenever the Cutter Solenoid is replaced, the cutter pressure must be adjusted using this menu.

- Required Tool

  Tension gauge (10N)

- Standard pressure

  350 to 700g

- Procedure

1. Enter into the Serviceman Mode.

   Turn the printer ON while holding down the **[Paper Source ◀], [Menu ▶], and [Paper Feed ▼]**.

2. Select "SELF TESTING: Test" to enter the Self Testing menu.

   [Menu ▶]

3. Select "Test: Cut Adj.".

   [Menu ▶] → [Paper Feed ▲] four times

4. Select "Cut Adj: Cutter".

   [Menu ▶]

5. Press the **[Enter ↵]** button after "Pressure: ∗XX%" is displayed on the LCD panel. "Exec. Adj. ?" will be displayed.
6. Press the **[Enter ↵]** button again. "Please Wait" will be displayed.
7. When the Carriage Unit moves to the cutoff position, "[Exec] Key Down" will be displayed.
8. Hitch the tip of the tension gauge to the cutter cap.
9. Press the **[Enter ↵]** button and pull the gauge. Measure the tension when the cutter is moved upward.
   - Measurement Points
     Perform the tension measurement at the right, center and the left of the printer.
     - When the result satisfies the standard level, finish the adjustment. Return the Carriage Unit to its home position and turn the printer OFF.
     - When the result does not satisfies the standard level, proceed to Step 10.
       If the standard level cannot be obtained even after repeating the adjustment, replace the Cutter Solenoid.
10. **[**Decrease or increase the value by pressing the **[Paper Feed ▲ (▼)]** buttons and press the **[Enter ↵]** button to accept the change. →Step 5

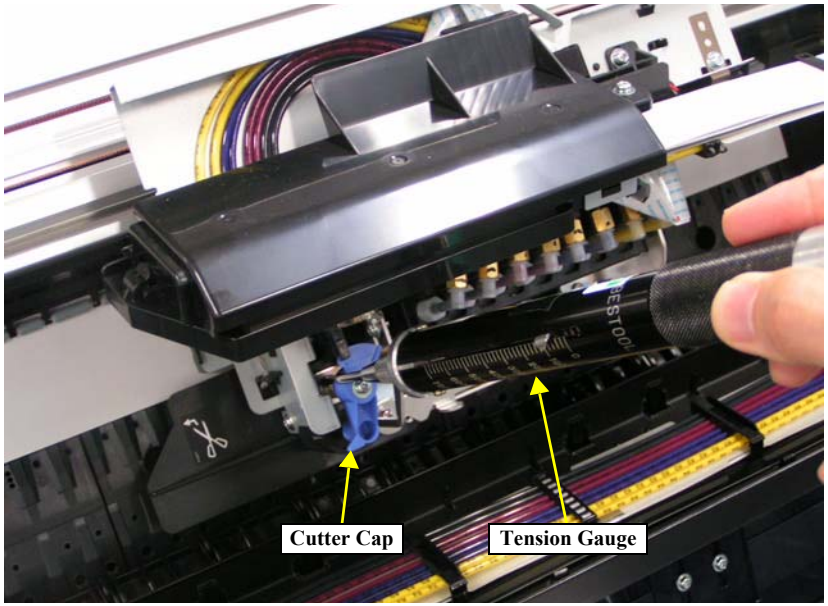

Figure 5-30. Cutter Pressure Adjustment

5.3.7 Nozzle Bi-D Adjustment

This menu conducts a bi-directional printing alignment adjustment for the Photo or Matte black nozzle column. The black ink alignment should be adjusted properly before performing the Bi-D adjustment for the other color ink.

- Paper Used
  - Size: 24” (Stylus Pro 7400/7800)
    44” (Stylus Pro 9400/9800)
  - Type: Doubleweight Matte Paper
- Procedure

1. Turn the printer ON.
2. Start up the Adjustment Program and select [Nozzle Bi-D Adjustment].
3. Click the [Print] button to print a nozzle check pattern. The printer starts printing the Bi-D pattern and the current setting.
4. Examine the printout lines and select the value for the most sharpest and straight line. Then enter the value into the edit box.

CHECK POINT

The printed pattern is changed 2 steps, but you can input in 1-step unit.

5. Click the [Write] button. After writing the value is completed, print the Bi-D pattern again for verification.

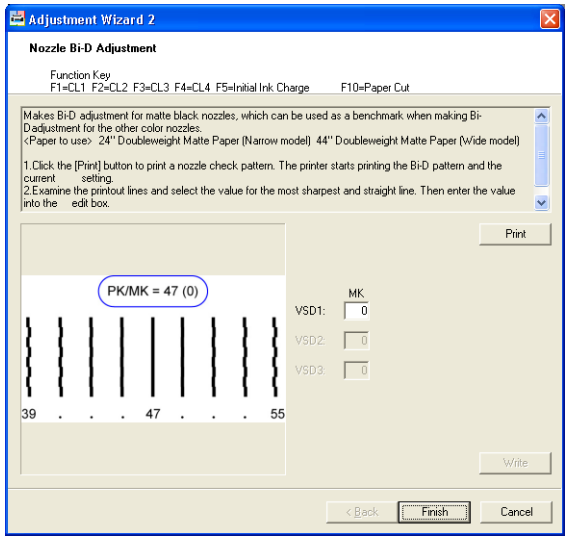

Figure 5-31. [Nozzle Bi-D Adjustment] Screen

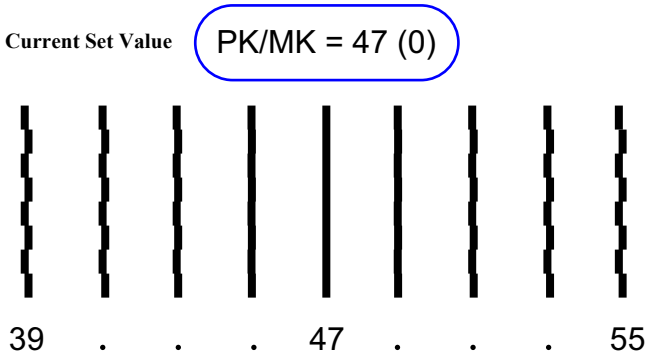

Figure 5-32. Bi-D Pattern

5.3.8 Print Head Slant Adjustment (PF)

☐ Paper Used

- Size: 24” (Stylus Pro 7400/7800)
  44” (Stylus Pro 9400/9800)
- Type: Premium Glossy Photo Paper

☐ Procedure

1. Turn the printer ON.
2. Start up the Adjustment Program and select [Print Head Slant Adjustment (PF)].
3. Click the [Print] button to print the adjustment pattern.

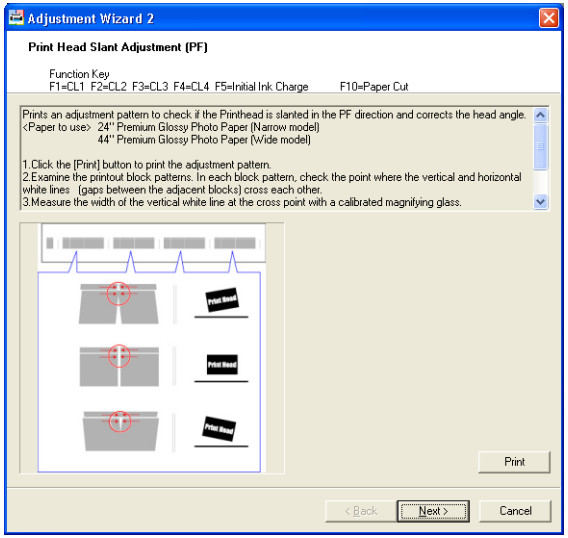

Figure 5-33. [Print Head Slant Adjustment (PF)] Screen (1)

4. Examine the printout block patterns. In each block pattern, check the point where the vertical and horizontal white lines (gaps between the adjacent blocks) cross each other.
5. Measure the width of the vertical white line at the cross point with a calibrated magnifying glass.

- A=B (Pattern 2):
  Click the [Next] and click the [Finish] on the next screen to finish the adjustment.
- A>B, or A<B (Pattern 1, 3):
  Click the [Next] and start adjustment on the next screen. →Step 6

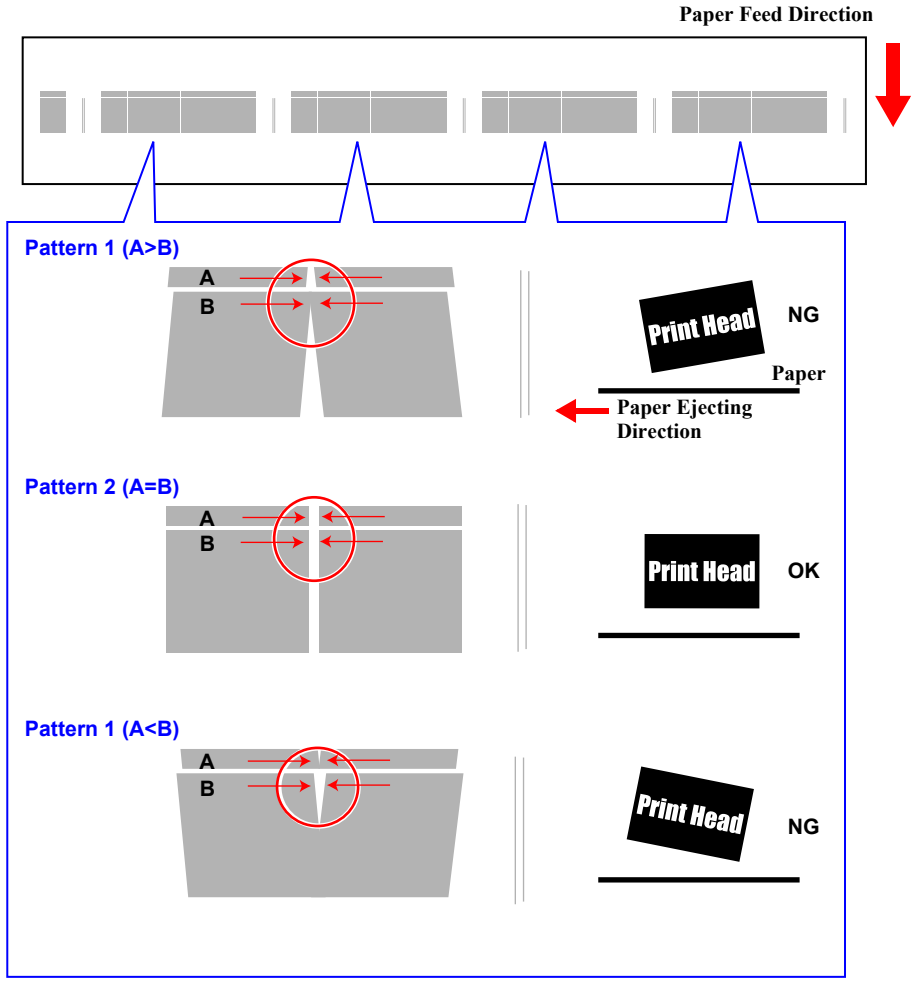

Figure 5-34. Adjustment Pattern

6. Remove the H Top Cover and move the Carriage Unit to the center.
7. Remove the two screws (A and B shown in Figure 5-35) that secure the Head Fixing Plate and remove it.
8. Loosen the screw (C) that secures the Head Slant Lever.

CHECK POINT

Loosing or tightening the screw securing the Head Slant Lever becomes easier with a ratchet screwdriver.

9. Slightly move the Head Slant Lever up or downward to correct the inclination of the printhead.
   - A>B (Pattern 1) shown in Figure 5-34:
     Move the Head Slant Lever downward.
   - A<B (Pattern 3) shown in Figure 5-34:
     Move the Head Slant Lever upward.
10. Attach the three screws removed in Step 7, and tighten them in the order of A, B, and C. Then return the Carriage Unit to its home position and close the printer cover (half transparent).
11. Click the [Back] button to return to the previous screw. Repeat Step 3 to Step 9 until the correct result is obtained.

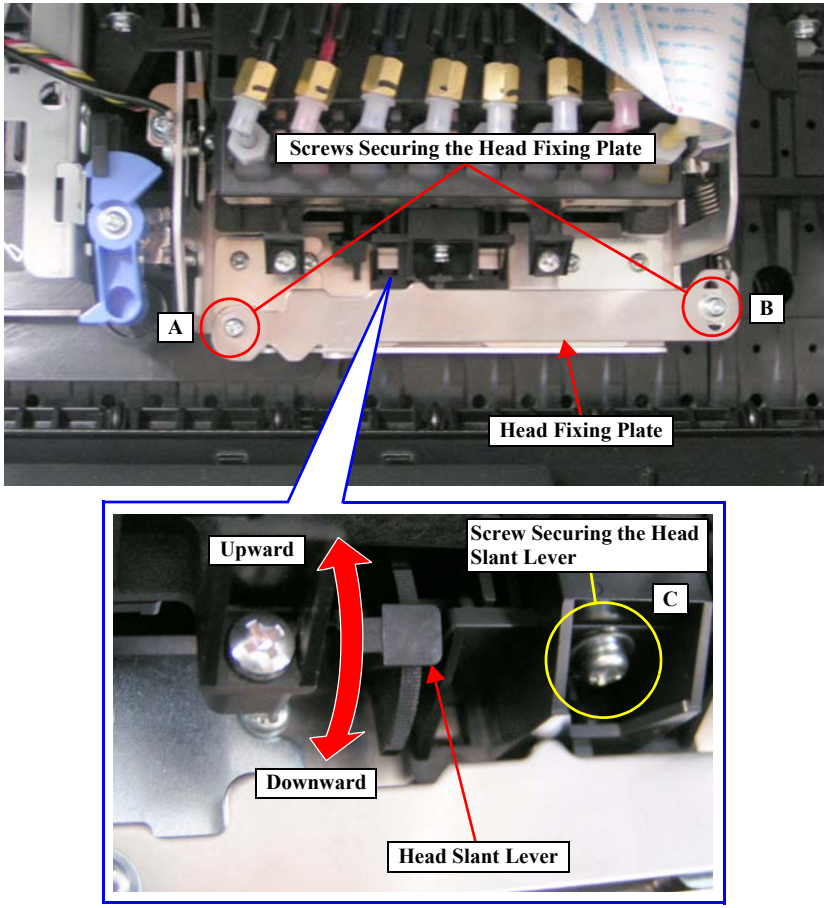

Figure 5-35. Screws and Head Slant Lever

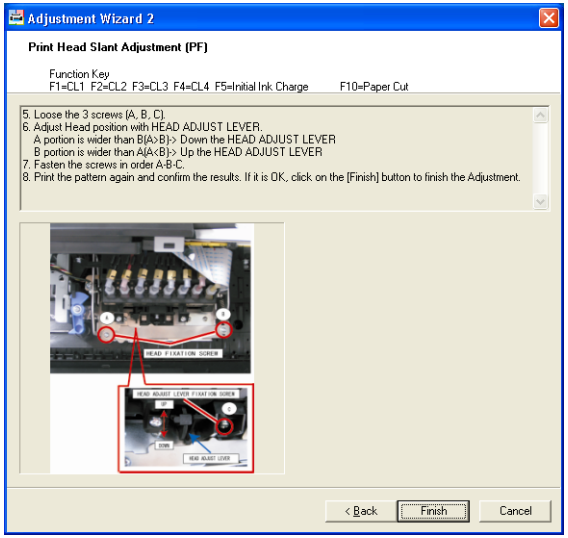

Figure 5-36. Print Head Slant Adjustment (PF) Screen (2)

5.3.9 Print Head Slant Adjustment (CR)

- Paper Used
  - Size: 24” (Stylus Pro 7400/7800)
    44” (Stylus Pro 9400/9800)
  - Type: Premium Glossy Photo Paper
- Procedure
  1. Turn the printer ON.
  2. Start up the Adjustment Program and select [Print Head Slant Adjustment (CR)].
  3. Click the [Print] button to print the adjustment pattern.

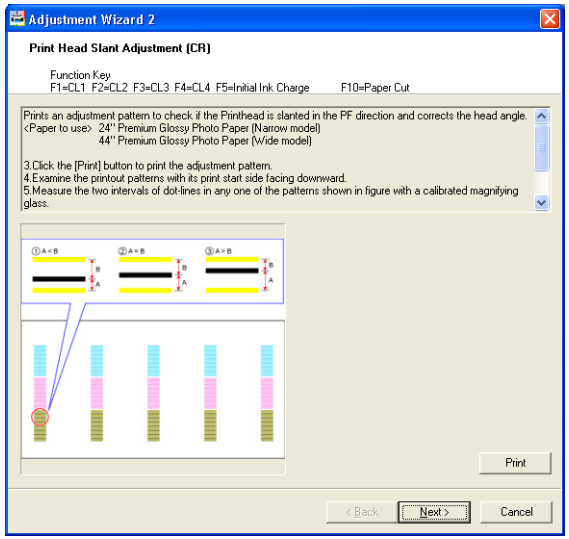

Figure 5-37. [Print Head Slant Adjustment (CR)] Screen (1)

4. Examine the printout patterns with its print start side facing downward.
5. Measure the two intervals of dot-lines in any one of the patterns shown in Figure 5-38 with a calibrated magnifying glass.
   - The two intervals are the same: No need to make the adjustment. Click the [Next] button twice to display the Screen 3 (Figure 5-41) and click the [Run] on the screen. The Carriage Unit will return to its home position and the roll paper will be reeled off.
     Click the [Finish] button to exit out of the adjustment menu.
   - The two intervals are Not the same: Proceed to Step 6.

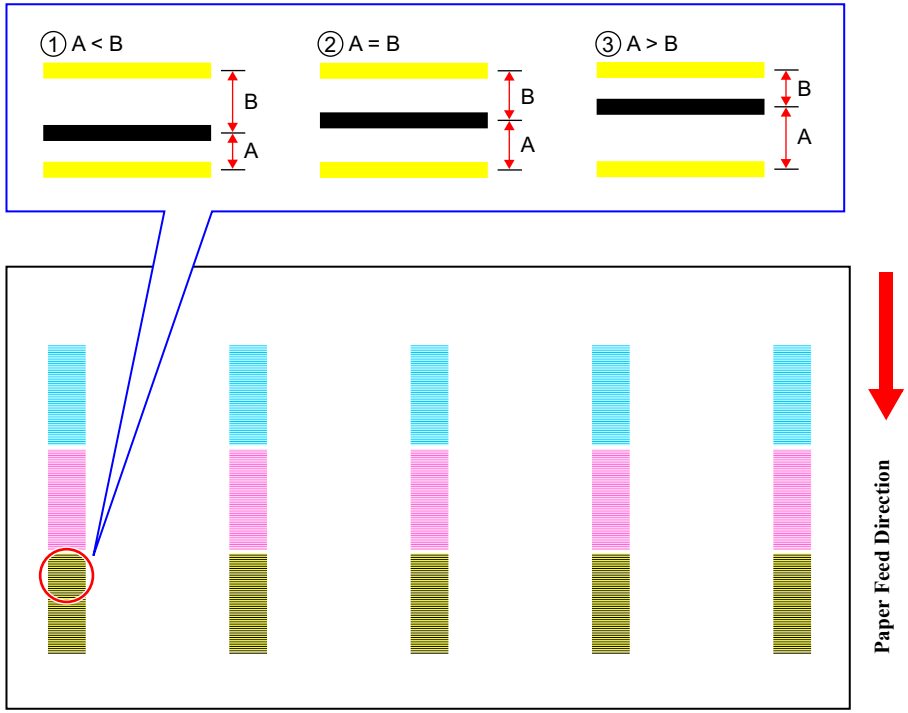

Figure 5-38. Adjustment Pattern

6. Remove the H Top Cover and move the Carriage Unit to the center.
7. Remove the two screws (A and B shown in Figure 5-40) that secure the Head Fixing Plate and remove it.
8. Slightly move the H Adjust Lever up or downward to correct the inclination of the printhead.
   - A<B shown in Figure 5-38: Move the H Adjust Lever downward.
   - A>B shown in Figure 5-38: Move the H Adjust Lever upward.
9. Tighten the A and B screws that are removed in Step 7 in that order.
10. Close the printer cover (half transparent) and temporary joint the cover.
11. Press the [Back] button to return to the Screen 1 (Figure 5-37) and click the [Print] on the screen to print the adjustment pattern again. The Carriage Unit automatically moves to the center upon finishing the printing.
12. Click the [Next] button. (Go to Screen 3)
13. Examine the printout patterns again following the instruction in Step 5. If the result is NG, perform Step 6 to Step 13 again.

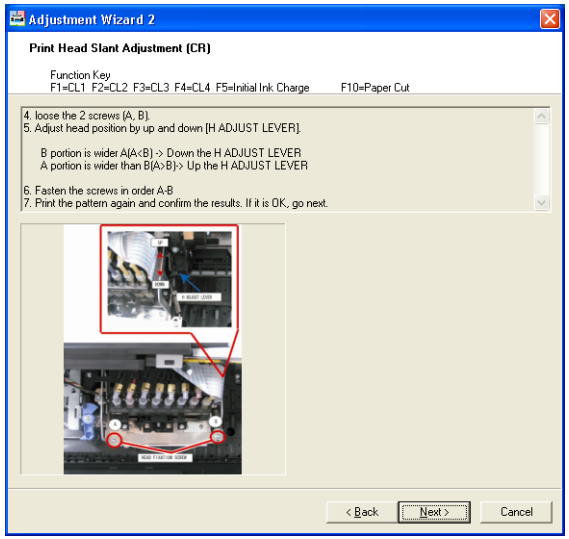

Figure 5-39. [Print Head Slant Adjustment (CR)] Screen (2)

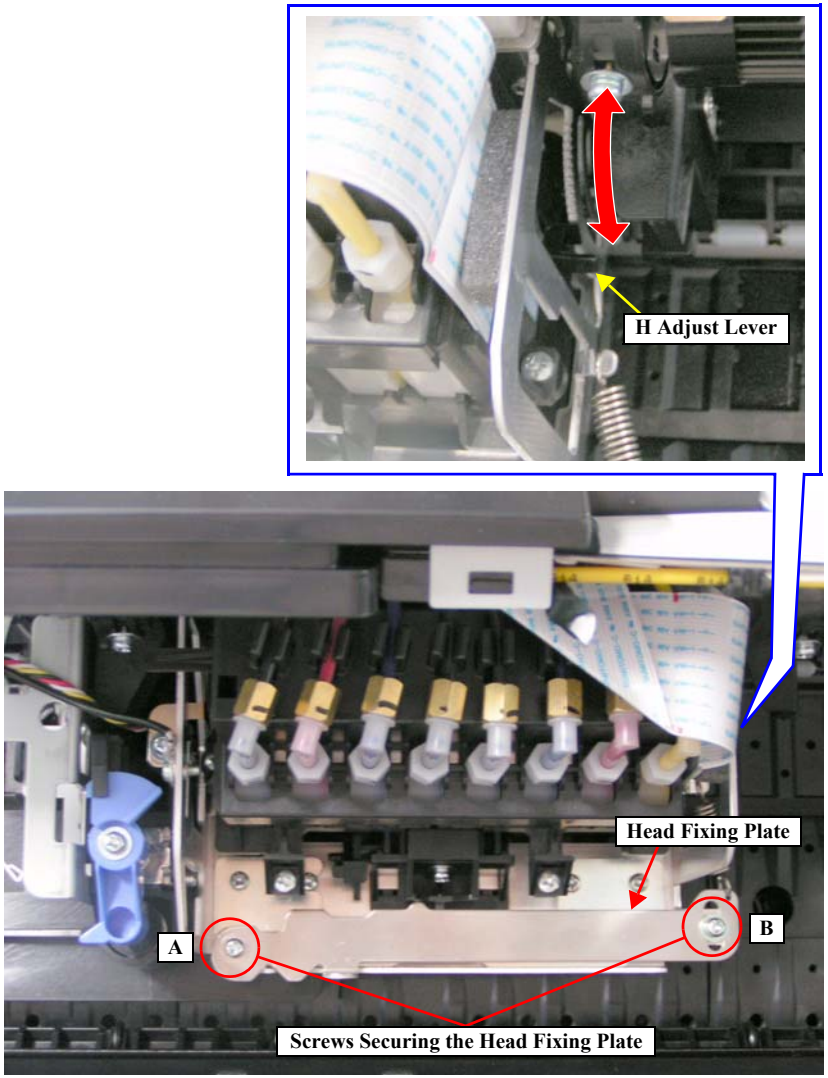

Figure 5-40. Screws Securing the Head Fixing Plate and the H Adjust Lever

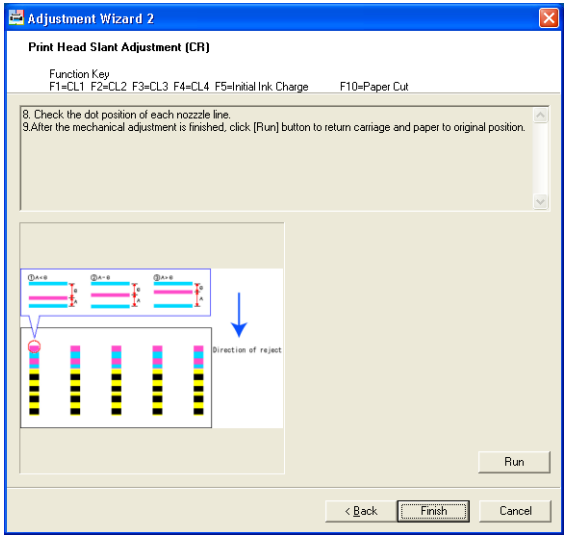

Figure 5-41. [Print Head Slant Adjustment (CR)] Screen (3)

5.3.10 Ink Mark Sensor Level Adjustment

This adjustment is made automatically. The Ink Mark Sensor emits light on the paper and the platen, and receives the reflected light. The printer automatically adjusts the sensitivity of the sensor by examining the received light intensity. The procedure below explains how to print and read the adjustment values.

- Paper Used
  - Size: 24” (Stylus Pro 7400/7800)
    44” (Stylus Pro 9400/9800)
  - Type: Doubleweight Matte Paper
- Procedure
  1. Turn the printer ON.
  2. Start up the Adjustment Program and select [Ink Mark Sensor Level Adjustment].
  3. Click the [Run] button to print adjusted values.
  4. The following are explanations of the printed values. Check the values in B to E if they meet the standard.
     - A: Indicates which photoreceiver; PW1 or PW2 received the light when the platen gap is set to 1.2.
     - B: Switches between 1 and 0 depending on the received light intensity. The LED light intensity changes according to this value.
     - C: Indicates the light intensity emitted from the LED. There is no standard for the light intensity control.
     - D: Indicates the light intensity reflected off the paper. The values should be within the range of 230 to 236.
     - E: Indicates the light intensity reflected off the platen. The value should be a single-digit number.
  5. Click the [Finish] button.

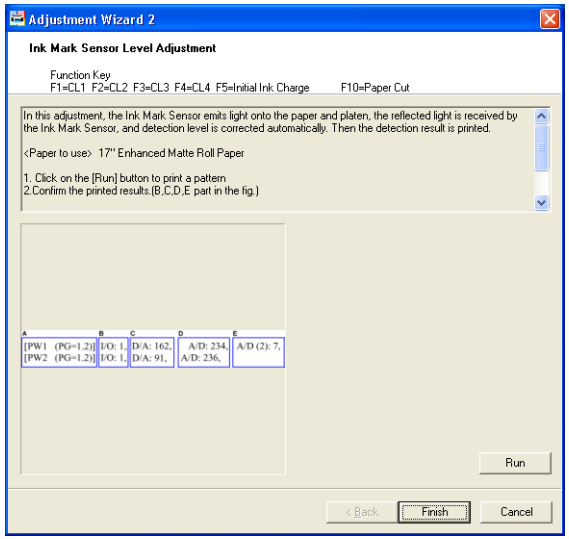

Figure 5-42. [Ink Mark Sensor Level Adjustment] Screen

A	B	C	D	E
[PW1 (PG=1.2)] [PW2 (PG=1.2)]	I/O: 1, I/O: 1,	D/A: 162, D/A: 91,	A/D: 234, A/D: 236,	A/D (2): 7,

Figure 5-43. Ink Mark Sensor Adjusted Values

5.3.11 Auto Uni-D Adjustment

An automatic Uni-D adjustment by the Ink Mark Sensor can be made using this menu. After printing the adjustment pattern, the subsequent adjustment procedures (scanning the pattern and correction) are performed automatically.The pattern is printed with the platen gap set to 1.2. The correction values obtained using the pattern are reflected on the other platen gap settings (the values are copied and stored for each platen gap setting).

- Paper Used
  - Size: 24” (Stylus Pro 7400/7800)
    44” (Stylus Pro 9400/9800)
  - Type: Doubleweight Matte Paper
- Procedure
  1. Turn the printer ON.
  2. Start up the Adjustment Program and select [Auto Uni-D Adjustment].
  3. Click the [Run] button to print the adjustment pattern.
  4. When the pattern is printed, the printer automatically starts to scan the pattern and performs the corrections. (No manual adjustment is required.)
  5. Click the [Finish] button.

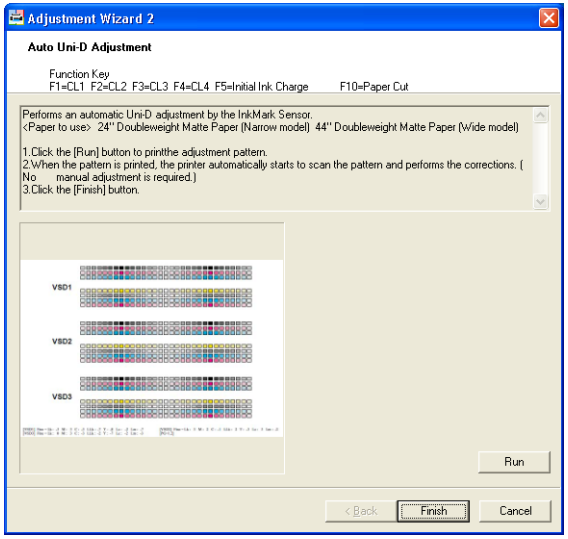

Figure 5-44. [Auto Uni-D Adjustment] Screen

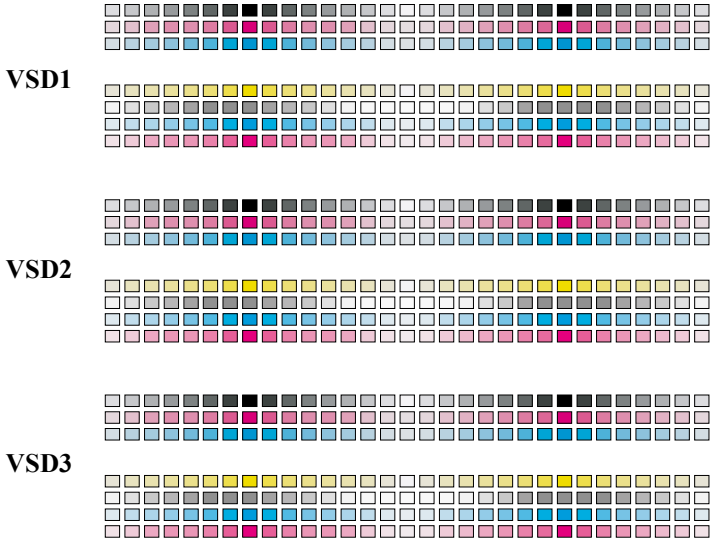

[VSD1] Fine = Lk : -3 M : 3 C : -3 LLk : -7 Y : -8 Lc : -2 Lm : -7 [VSD2] Fine = Lk : 3 M : 2 C : -1 LLk : 2 Y : -3 Lc : 3 Lm : -2
[VSD3] Fine = Lk : 0 M : 3 C : -3 LLk : -2 Y : -7 Lc : -2 Lm : -3 [PG=1.2]

Figure 5-45. Adjustment Pattern

5.3.12 Auto Bi-D Adjustment (P.G. 0.8/1.6)

An automatic Bi-D adjustment by the Ink Mark Sensor can be made using this menu. After printing the adjustment pattern with the platen gap set to 0.8 or 1.6, the subsequent adjustment procedures (scanning the pattern and correction) are performed automatically.

CHECK POINT

The difference between this newly added adjustment and the "Auto Bi-D Adjustment" is whether the platen gap (0.8 or 1.6) to print the adjustment pattern can be selected individually or not (the latter one always prints two sets of pattern using the both platen gap settings).

- Paper Used
  - Size: 24" (Stylus Pro 7400/7800)
    44" (Stylus Pro 9400/9800)
  - Type: Doubleweight Matte Paper
- Procedure
  1. Turn the printer ON.
  2. Start up the Adjustment Program and select [Auto Nozzle Bi-D Adjustment (P.G. 0.8/1.6)].
  3. Select the platen gap between 0.8 and 1.6, and click [Run] button to print the adjustment pattern.
  4. When the pattern is printed, the printer automatically starts to scan the pattern and performs the corrections. (No manual adjustment is required.)
  5. Click the [Finish] button.

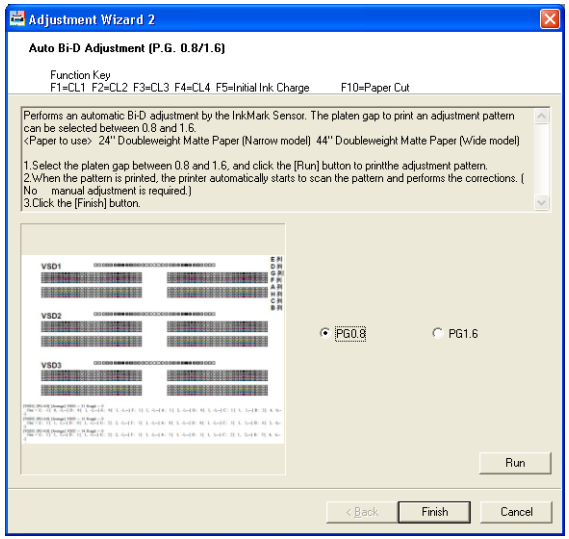

Figure 5-46. [Auto Bi-D Adjustment (PG0.8/1.6)] Screen

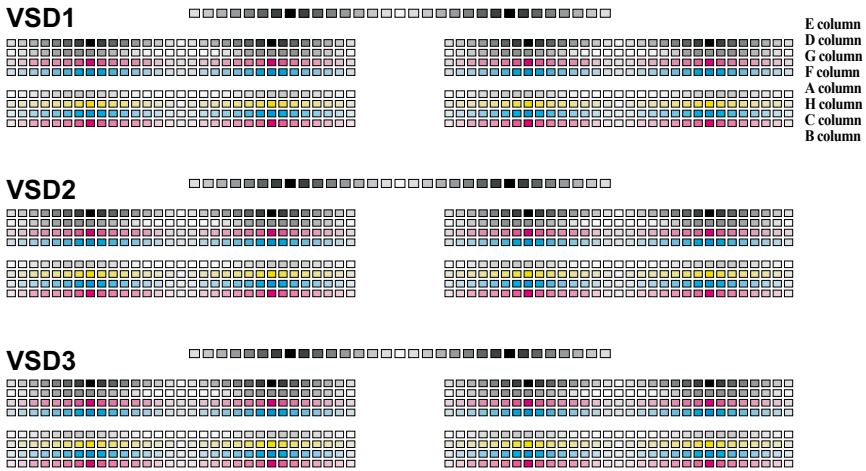

[VSD1] [PG=0.8] [Average] VSD1 = 21 Rough = 0
Fine = E : -1 [0, -1,---] D : 0 [1, -1,---] G : 0 [1, -1,---] F : 1 [1, -1,---] A : 1 [3, -1,---] H : 0 [1, -1,---] C : 1 [1, 1,---] B : 2 [4, 0,---]
[VSD2] [PG=0.8] [Average] VSD2 = 13 Rough = 0
Fine = E : 1 [1, 1,---] D : 0 [1, -1,---] G : 2 [2, -1,---] F : 1 [1, -1,---] A : 0 [1, -1,---] H : 0 [1, -1,---] C : 1 [1, 1,---] B : 4 [3, 4,---]
[VSD3] [PG=0.8] [Average] VSD2 = 14 Rough = 0
Fine = E : 1 [1, 1,---] D : 1 [1, -1,---] G : 2 [2, -1,---] F : 1 [1, -1,---] A : 1 [1, -1,---] H : 1 [1, 1,---] C : 2 [1, 2,---] B : 5 [4, 6,---]

Figure 5-47. Adjustment Pattern

5.3.13 Ink Mark Sensor Adjustment for Auto Nozzle Check

This menu automatically adjusts the Ink Mark Sensor scanning timing (drive pulse of the CR and PF motors), and also checks the sensor for dot-missing detection sensitivity. Since the scanning timing varies by unit-to-unit according to the CR and PF motors' characteristic, the timing adjustment is made by storing a difference (correction value) between standard values (pulses) and actually measured values. First the printer automatically prints a pattern and makes the timing adjustment in both main and sub scanning directions using the pattern. Then two patterns (with and without dot-missing) are printed to check the dot-missing detection sensitivity of the sensor.

- Paper Used
  - Size: 24" (Stylus Pro 7400/7800)
    44" (Stylus Pro 9400/9800)
  - Type: Doubleweight Matte Paper
- Procedure
  1. Turn the printer ON.
  2. Start up the Adjustment Program and select [Ink Mark Sensor Adjustment for Auto Nozzle Check].
  3. Select the [Sensor Adjustment] and click the [Run] button. An adjustment pattern will be printed.
     The Ink Mark Sensor starts to scan the printed pattern and when finished, the printer automatically conducts the timing adjustment and prints the result.

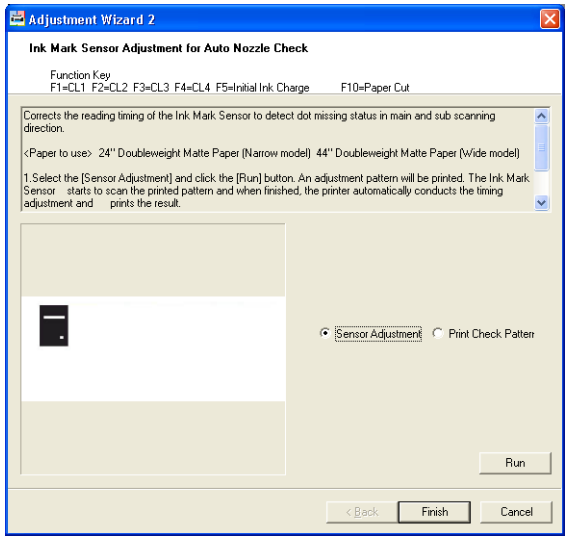

Figure 5-48. [Ink Mark Sensor Adjustment for Auto Nozzle Check] Screen

Figure 5-49. Adjustment Pattern

4. Select the [Print Check Pattern] and click the [Run] button to print dot-missing detection check patterns.
   The one pattern includes dot-missing and the other one does not. The Ink Mark Sensor scans them and the result is printed below the patterns.
5. Click the [Finish] button.

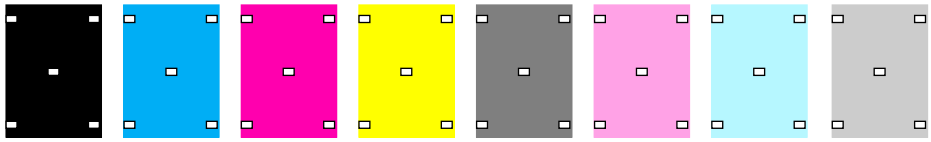

```
[PG=1.2]
[Count] MK:5   C :5      M :5      Y :5      LLk:5     Lm:5      LC:5      Lk:5
[Position] MK  : ( 1,  3) , ( 9,  3) , ( 5, 13) , ( 1, 22) , ( 9, 22) , ( 0,  0),
                 ( 0,  0) , ( 0,  0) , ( 0,  0) , ( 0,  0) , ( 0,  0) , ( 0,  0)
[Position] C   : ( 1,  3) , ( 9,  3) , ( 5, 13) , ( 1, 22) , ( 9, 22) , ( 0,  0),
                 ( 0,  0) , ( 0,  0) , ( 0,  0) , ( 0,  0) , ( 0,  0) , ( 0,  0)
[Position] M   : ( 1,  3) , ( 9,  3) , ( 5, 13) , ( 1, 22) , ( 9, 22) , ( 0,  0),
                 ( 0,  0) , ( 0,  0) , ( 0,  0) , ( 0,  0) , ( 0,  0) , ( 0,  0)
[Position] Y   : ( 1,  3) , ( 9,  3) , ( 5, 13) , ( 1, 22) , ( 9, 22) , ( 0,  0),
                 ( 0,  0) , ( 0,  0) , ( 0,  0) , ( 0,  0) , ( 0,  0) , ( 0,  0)
[Position] LLk : ( 1,  3) , ( 9,  3) , ( 5, 13) , ( 1, 22) , ( 9, 22) , ( 0,  0),
                 ( 0,  0) , ( 0,  0) , ( 0,  0) , ( 0,  0) , ( 0,  0) , ( 0,  0)
[Position] Lm  : ( 1,  3) , ( 9,  3) , ( 5, 13) , ( 1, 22) , ( 9, 22) , ( 0,  0),
                 ( 0,  0) , ( 0,  0) , ( 0,  0) , ( 0,  0) , ( 0,  0) , ( 0,  0)
[Position] Lc  : ( 1,  3) , ( 9,  3) , ( 5, 13) , ( 1, 22) , ( 9, 22) , ( 0,  0),
                 ( 0,  0) , ( 0,  0) , ( 0,  0) , ( 0,  0) , ( 0,  0) , ( 0,  0)
[Position] Lk  : ( 1,  3) , ( 9,  3) , ( 5, 13) , ( 1, 22) , ( 9, 22) , ( 0,  0),
                 ( 0,  0) , ( 0,  0) , ( 0,  0) , ( 0,  0) , ( 0,  0) , ( 0,  0)
OK! Go to next work
```

Figure 5-50. Dot-missing Detection Check Pattern (with dot-missing)

```
[PG=1.2]
[Count] MK:5   C :0      M :0      Y :0      LLk:0     Lm:0      LC:0      Lk:0
[Position] MK  : ( 0,  0) , ( 0,  0) , ( 0,  0) , ( 0,  0) , ( 0,  0) , ( 0,  0),
                 ( 0,  0) , ( 0,  0) , ( 0,  0) , ( 0,  0) , ( 0,  0) , ( 0,  0)
[Position] C   : ( 0,  0) , ( 0,  0) , ( 0,  0) , ( 0,  0) , ( 0,  0) , ( 0,  0),
                 ( 0,  0) , ( 0,  0) , ( 0,  0) , ( 0,  0) , ( 0,  0) , ( 0,  0)
[Position] M   : ( 0,  0) , ( 0,  0) , ( 0,  0) , ( 0,  0) , ( 0,  0) , ( 0,  0),
                 ( 0,  0) , ( 0,  0) , ( 0,  0) , ( 0,  0) , ( 0,  0) , ( 0,  0)
[Position] Y   : ( 0,  0) , ( 0,  0) , ( 0,  0) , ( 0,  0) , ( 0,  0) , ( 0,  0),
                 ( 0,  0) , ( 0,  0) , ( 0,  0) , ( 0,  0) , ( 0,  0) , ( 0,  0)
[Position] LLk : ( 0,  0) , ( 0,  0) , ( 0,  0) , ( 0,  0) , ( 0,  0) , ( 0,  0),
                 ( 0,  0) , ( 0,  0) , ( 0,  0) , ( 0,  0) , ( 0,  0) , ( 0,  0)
[Position] Lm  : ( 0,  0) , ( 0,  0) , ( 0,  0) , ( 0,  0) , ( 0,  0) , ( 0,  0),
                 ( 0,  0) , ( 0,  0) , ( 0,  0) , ( 0,  0) , ( 0,  0) , ( 0,  0)
[Position] Lc  : ( 0,  0) , ( 0,  0) , ( 0,  0) , ( 0,  0) , ( 0,  0) , ( 0,  0),
                 ( 0,  0) , ( 0,  0) , ( 0,  0) , ( 0,  0) , ( 0,  0) , ( 0,  0)
[Position] Lk  : ( 0,  0) , ( 0,  0) , ( 0,  0) , ( 0,  0) , ( 0,  0) , ( 0,  0),
                 ( 0,  0) , ( 0,  0) , ( 0,  0) , ( 0,  0) , ( 0,  0) , ( 0,  0)
OK! Go to next work
```

Figure 5-51. Dot-missing Detection Check Pattern (No dot-missing)

5.3.14 Skew Check

- Paper Used
  - Size: 24” (Stylus Pro 7400/7800)
    44” (Stylus Pro 9400/9800)
  - Type: Doubleweight Matte Paper
- Procedure

1. Turn the printer ON.
2. Start up the Adjustment Program and select [Skew Check].
3. Click the [Run] button. The roll paper will be ejected by about one meter and a deviation in position of the left and right edge of the paper is detected by the Multi Sensor.

CAUTION

As about one-meter-length roll paper is ejected, keep the paper ejection area clear of any obstacles.

4. When the deviation amount is displayed, click the [OK] button.
5. Click the [Finish] button and reset the roll paper.

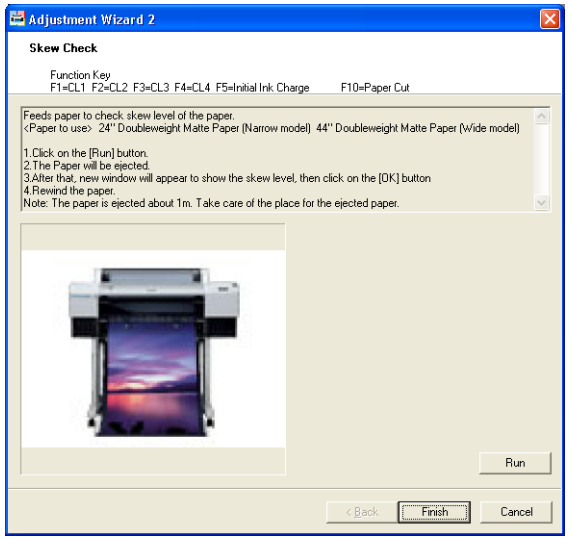

Figure 5-52. [Skew Check] Screen

5.3.15 Platen Position Adjustment

This menu allows you to adjust print position for the borderless printing (no margin on the left and right sides) in relation to the position of the Ink pads on the platen.

- Paper Used
  - Size: 24” (Stylus Pro 7400/7800)
    44” (Stylus Pro 9400/9800)
  - Type: Doubleweight Matte Paper
- Adjustment Procedure
  1. Turn the printer ON.
  2. Start up the Adjustment Program and select [Platen Position Adjustment].
  3. Click the [Print] button to print the adjustment pattern.
  4. Check if the line printed on the right side of the paper (when viewed from the front of the printer) aligns with the edge of the platen tabs holding down the Ink Pad as shown in Figure 5-54. If it does, click the [Next] button to proceed to the next “Check Procedure”. If the line is not in proper alignment, measure the deviation (the gap shown by red arrows in Figure 5-54, and enter the measured value into the edit box.
     - When the line is shifted leftward: + (plus) the measured value
     - When the line is shifted rightward: - (minus) the measured value
  5. Click the [Write] button to write the value into the printer.
  6. Click the [Next] button.

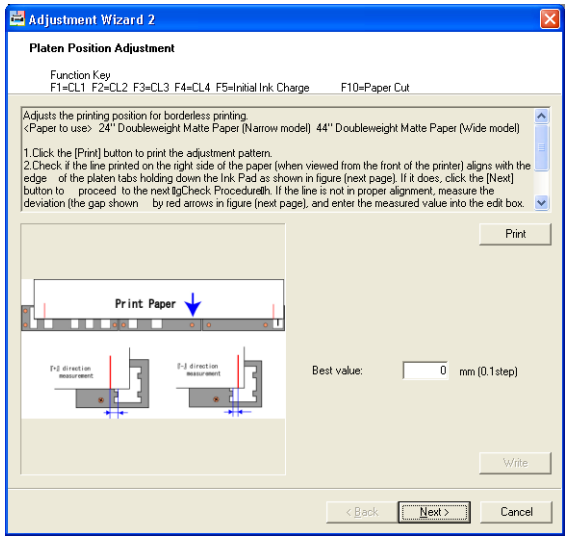

Figure 5-53. [Platen Position Adjustment] Screen (1)

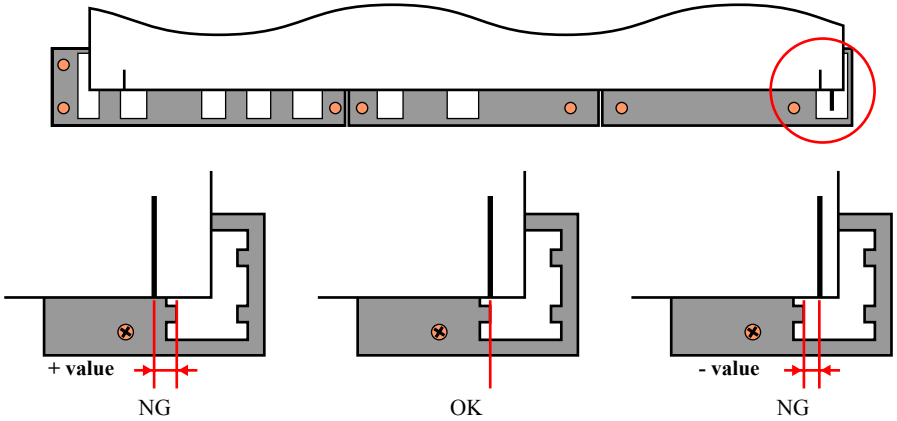

Figure 5-54. Adjustment Pattern

☐ Check Procedure

1. Click the [Check] button to print the check pattern.
2. Check if the printed lines align with the edge of the platen tabs holding down the Ink Pad as shown in Figure 5-56. If it does, click the [Finish] button.
   If the lines are not in proper alignment with the platen tabs, click the [Back] button to perform the adjustment again.

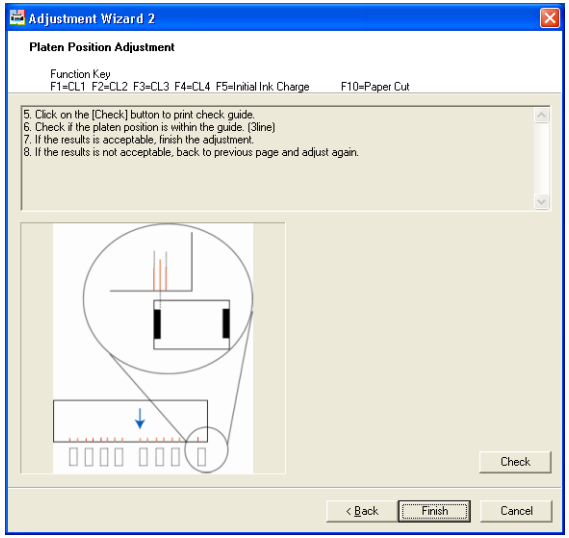

Figure 5-55. [Platen Position Adjustment] Screen (2)

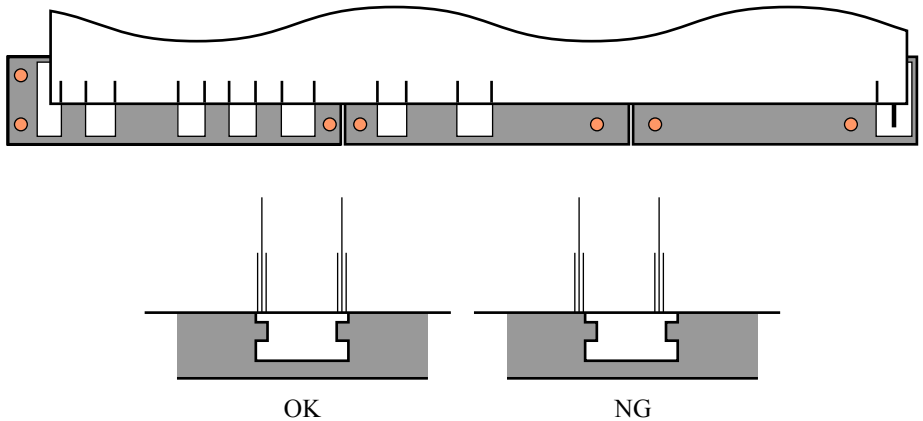

Figure 5-56. Adjustment Pattern

5.3.16 980mm Band Feed Adjustment

- Paper Used
  - Size: 24” (Stylus Pro 7400/7800)
    44” (Stylus Pro 9400/9800)
  - Type: Doubleweight Matte Paper
- Procedure
  1. Turn the printer ON.
  2. Start up the Adjustment Program and select [980mm Band Feed Adjustment].
  3. Click the [Print] button to print the adjustment pattern.
  4. Measure the distance shown in Figure 5-58 with a 1000 mm ruler and a scale stopper.
  5. Enter the measured value into the [980mm Band] edit box and click the [Write] button.
  6. Click the [Finish] button.

CHECK POINT

A line printed on the center is a guide line to help the measurement.

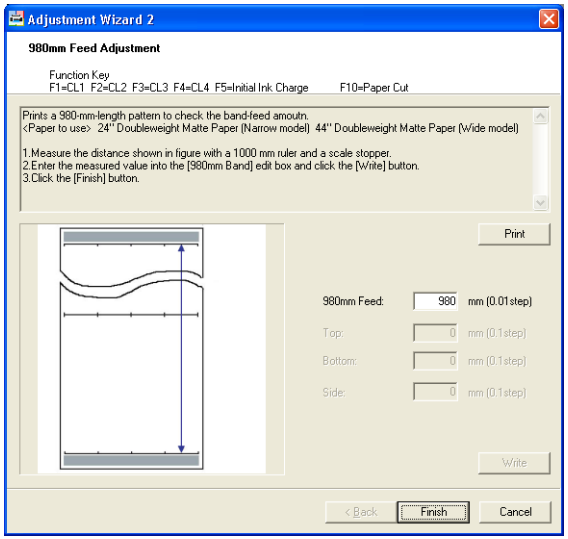

Figure 5-57. [980mm Band Feed Adjustment] Screen

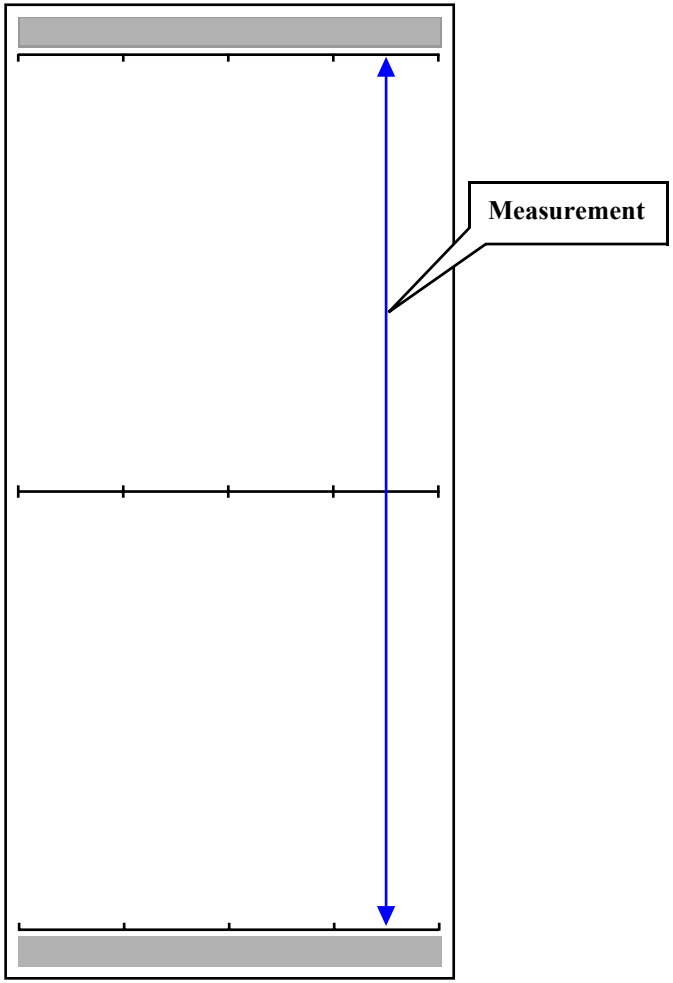

Figure 5-58. Adjustment Pattern

5.3.17 Initial Ink Charge Flag ON/OFF

☐ Procedure

1. Enter into the Serviceman Mode.

   Turn the printer ON while holding down the **[Paper Source ◀], [Menu ▶], and [Paper Feed ▼]**.

2. Start up the Adjustment Program and select [Initial Ink charge flag ON/OFF].
3. Select “ON” or “OFF” and click the [Run] button.
4. Click the [Finish] button.

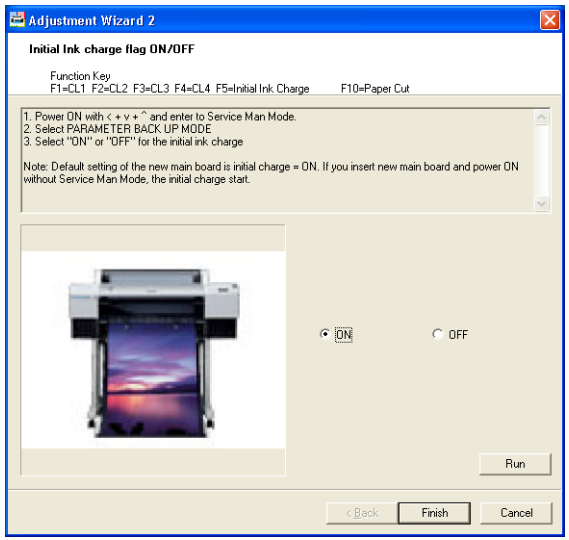

Figure 5-59. [Initial Ink Charge Flag ON/OFF] Screen

5.3.18 NVRAM Back Up and Write

Whenever the Main Board is replaced, parameters stored in the NVRAM on the previous board should be backed up and written onto the new board using this menu.

☐ Read & Save Procedure

CAUTION !

When reading the parameters from the previous board, turn the printer ON in Tiny mode. (Tiny mode: A special mode used only for the parameter reading operation.)

1. Enter into the Tiny mode.

   Turn the printer ON while holding down the **[Paper Source ◀], [Menu ▶], [Paper Feed ▲] and [Paper Feed ▼]**.
2. Start up the Adjustment Program and select [NVRAM Back Up and Write].
3. Click the [Run] button to run the NVRAM Backup Utility.
4. Select the target printer from which the parameters are read in the [Printer Name].
5. Click the [Read] button to start reading the parameters.
6. When the reading is completed, click the [Save] button and save the readout parameters under a new file name.
7. Turn the printer OFF.

☐ Write Procedure

CAUTION !

When writing the parameters on the new board, turn the printer ON in Service Man mode.

1. Remove the all Ink Cartridges.
2. Remove the Maintenance Tank.
3. Release the Paper Set Lever.
4. Enter into the Serviceman Mode.

   Turn the printer ON while holding down the **[Paper Source ◀], [Menu ▶], and [Paper Feed ▼]**.
5. Start up the Adjustment Program and select [NVRAM Back Up and Write].
6. Click the [Run] button to run the NVRAM Backup Utility.
7. Select the target printer on which the parameters are written in the [Printer Name].
8. Click the [Open] button to select and open the file which was saved in "Read & Save Procedure" Step 6.
9. Click the [Write] button to start writing the parameters.
10. When the writing is completed, exit out of the NVRAM Backup Utility.

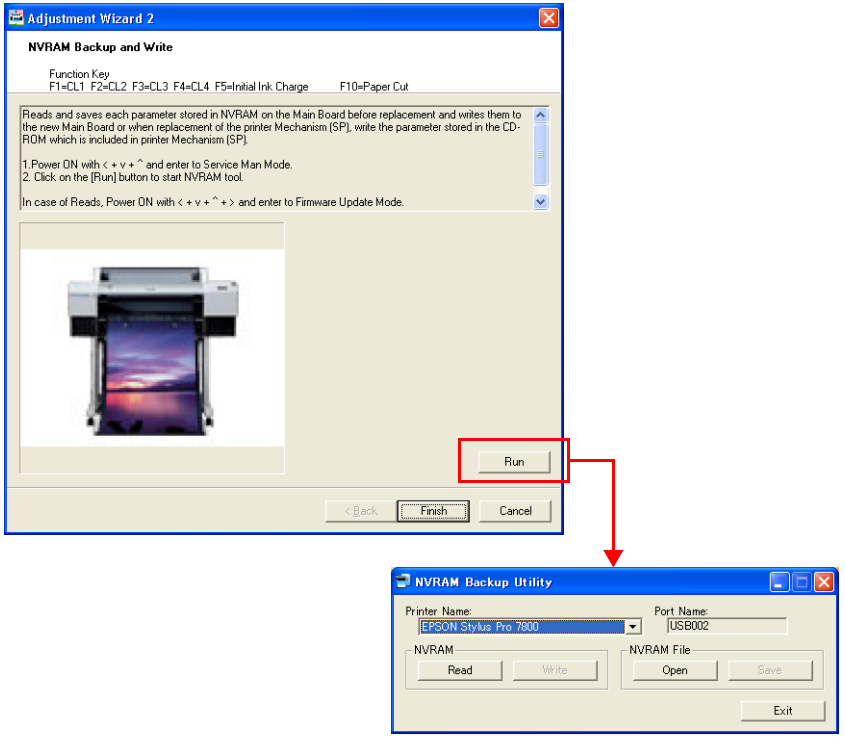

Figure 5-60. [NVRAM Back Up and Write] Screen

5.3.19 Initial Ink Charge

CAUTION

Check the remaining amount of ink before performing the initial ink charge. If the remaining amount is lower than 50%, replace the ink cartridge with a new one in advance.

☐ Procedure

1. Turn the printer ON.
2. Start up the Adjustment Program and select [Initial Ink Charge].
3. Press the F5 key to start the initial ink charge.
4. When the ink charge is completed, click the [Finish] button.

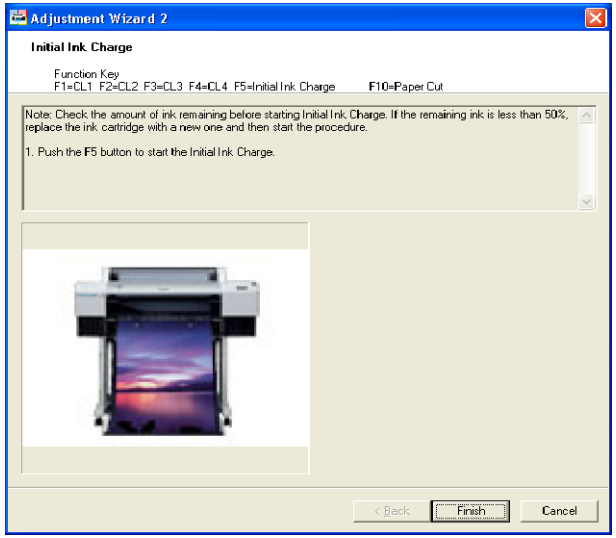

Figure 5-61. [Initial Ink Charge] Screen

5.3.20 Cleaning

☐ Procedure

1. Turn the printer ON.
2. Start up the Adjustment Program and select [Cleaning].
3. Select the cleaning type and press the corresponding key (F1 to F4) to perform the selected cleaning.

Key	Cleaning	Amount of Ink Consumption	Processing Time
F1	CL1	Approx. 2.9 g/8 colors	Approx. One and quarter min.
F2	CL2	Approx. 3.8 g/8 colors	Approx. One and quarter min.
F3	CL3	Approx. 7.8 g/8 colors	Approx. One and quarter min.
F4	CL4	Approx. 29.2 g/8 colors	Approx. Three and half min.

4. When the cleaning is completed, click the [Finish] button.

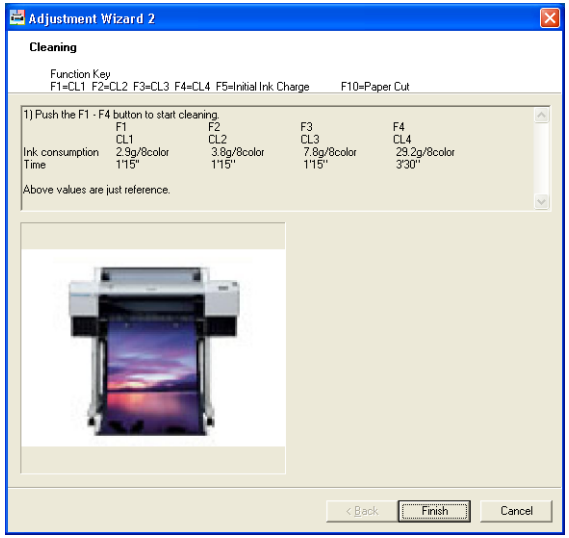

Figure 5-62. [Cleaning] Screen

5.3.21 Rear Sensor Adjustment

Whenever the Rear Sensor is replaced, AD values (basis for paper detection) of a newly attached sensor should be obtained to store them onto the Main Board.

☐ Required Tool

Kimoto, Micro Trace #300

☐ Procedure

1. Enter into the Serviceman Mode.

   Turn the printer ON while holding down the **[Paper Source ◀], [Menu ▶], and [Paper Feed ▼]**.
2. Select "SELF TESTING: Adjustment" to enter the Self Testing menu.

   [Paper Feed ▼] → [Menu ▶]
3. Select "Adjustment: RearAD".

   [Paper Feed ▼] five times
4. Release the Paper Set Lever.
5. Load the Micro Trace on the printer from the rear paper feeder setting it to the position shown in Figure 5-63, and lower the Paper Set Lever.

CAUTION !

In Figure 5-63, the H Top Cover is removed to show the position of the Micro Trace clearly. When performing the adjustment, do not remove the H Top Cover, or the AD value cannot be obtained correctly.

6. Press the **[Menu ▶]** button. "[Enter] Start" will be displayed on the LCD panel.
7. Press the **[Enter ↵]** button to start the AD value acquisition operation. After about five seconds, the obtained AD value is displayed as "RearAD: *** *** ***".

CAUTION !

"Retry AD Adjust" is displayed when the value cannot be obtained due to Rear Sensor failure. In such case, replace the sensor and make the adjustment again.

8. After confirming the "RearAD: *** *** ***" display, release the Paper Set Lever and remove the Micro Trace.
9. Lower the Paper Set Lever and turn the printer OFF.

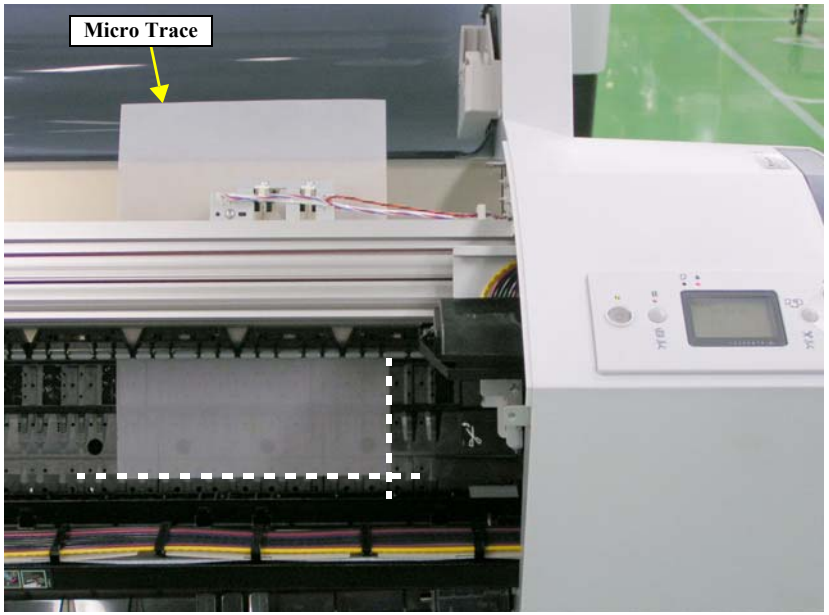

Figure 5-63. Setting the Micro Trace

5.3.22 Colorimetric Calibration (Color ID)

5.3.22.1 Adjustment Overview

This adjustment is required after replacing any of the following parts.

- PRINT HEAD
- BOARD ASSY., MAIN
- BOARD ASSY., SUB
- P/S BOARD ASSY.

PURPOSE

By registering/controlling information concerning the ink droplets, this product improves calibration accuracy and ensures stable color quality. (Difference in color among individual products or each mode is reduced.) (Refer to "2.5 Colorimetric Calibration (Color ID) Overview" *(p.169)*)

PRINCIPLE

The calibration is performed by measuring a printed correction pattern with a calibrator. ID information that is calculated based on the acquired color values (L*, a*, b*) is transmitted to the printer driver, and the printer driver corrects the dot generation amount for each dot size x each color in the print data.

5.3.22.2 Adjusting Method

TOOLS REQUIRED

Table 5-5. Tools Required

Tool	Application/Specification
Plain Paper (A4)	For nozzle check and printing surface protection
Plain Paper (A3)	For alignment check
EPSON Enhanced (Archival) Matte Paper (A4)	For printing charts
Computer	Following drivers should be installed beforehand. Printer driver for this product USB driver for the calibrator
GretagMacbeth eye-one (i1) (Calibrator)	With UV filter
Calibration plate (White plate)	Accessory provided with the calibrator
Scanning ruler (Scale)	Accessory provided with the calibrator
USB cable	To connect the computer and the calibrator
Black sheet	Should be larger than A4
Clear file	Required when sending charts

ADJUSTMENT WORKFLOW

The workflow of the adjustment is explained in this section. There are two types of the workflow; the one is for performing adjustment at a place same as the repair (parts replacement) work site, the other is for performing adjustment in a different place from the repair work site as the adjustment (color measuring) could not be executed on site.

- ☐ Entire process workflow

  Performing adjustment continuously at the same place where the repairment is carried put.

- ☐ Separate process workflow

  Performing adjustment (color measuring) in a different place from the repair work site

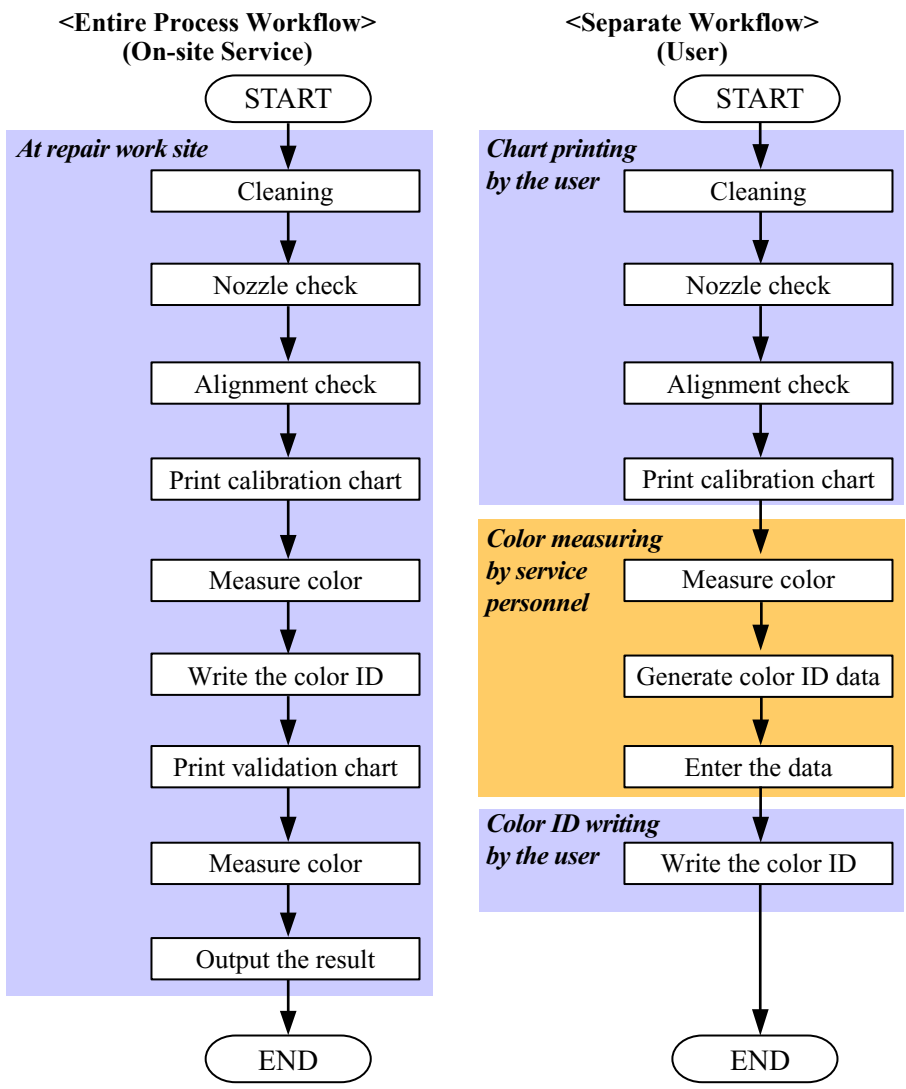

Figure 5-64. Adjustment Workflow

ADJUSTMENT PROCEDURE (ENTIRE PROCESS WORKFLOW)

1. Turn the printer power on.
2. Start the adjustment program, and select [Colorimetric Calibration Tool].
3. Click [Run] to start the “Colorimetric Calibration Tool”.
4. Click the [Perform entire process] button.
5. Make sure that the “READY” message is displayed on the printer LCD, and click [Next].
6. Select the connected printer from the printer list, and check if the LCD panel backlight of the printer flashes by clicking [Confirming flashing of the backlight].
7. Click [Next], then the message that prompt you to agitate the ink inside the cartridges will be displayed.

CHECK POINT

If the printer has not been used for more than two weeks, it is recommended to agitate the ink inside the cartridges to get an accurate result. Remove all the ink cartridges from the printer, and shake them gently for four or five times.

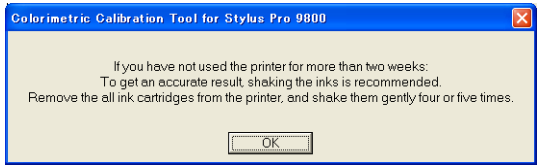

8. Click [OK] to start the cleaning.

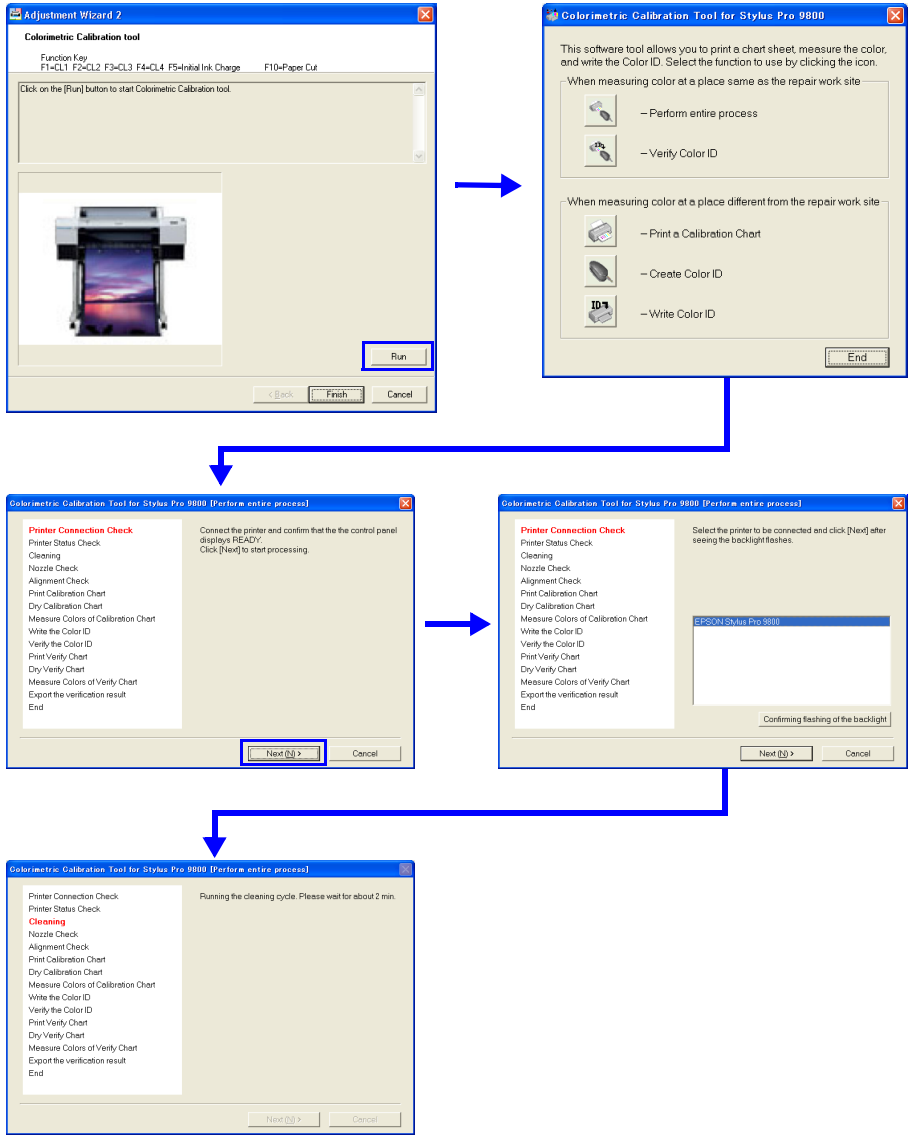

Figure 5-65. Colorimetric Calibration ID Startup Screen

9. Load an A4-sized paper vertically on the paper tray, select “Automatic Nozzle Check” from the “Types of Nozzle Check” box, and click [Next] to start the nozzle check.
10. Load an A3-sized paper horizontally on the paper tray and click [Next] to perform the alignment check.

CHECK POINT

Clicking the [Skip alignment check] button will let you proceed to the next step without performing the alignment check.

11. Check the alignment pattern. If there is any defect, click [Cleaning] to execute cleaning.
    If the check pattern is appropriate, click [Next].
12. Load an A4-sized Archival Matte Paper vertically on the paper tray, and click [Next] to print the calibration chart.

CAUTION

Never touch the printed calibration chart.

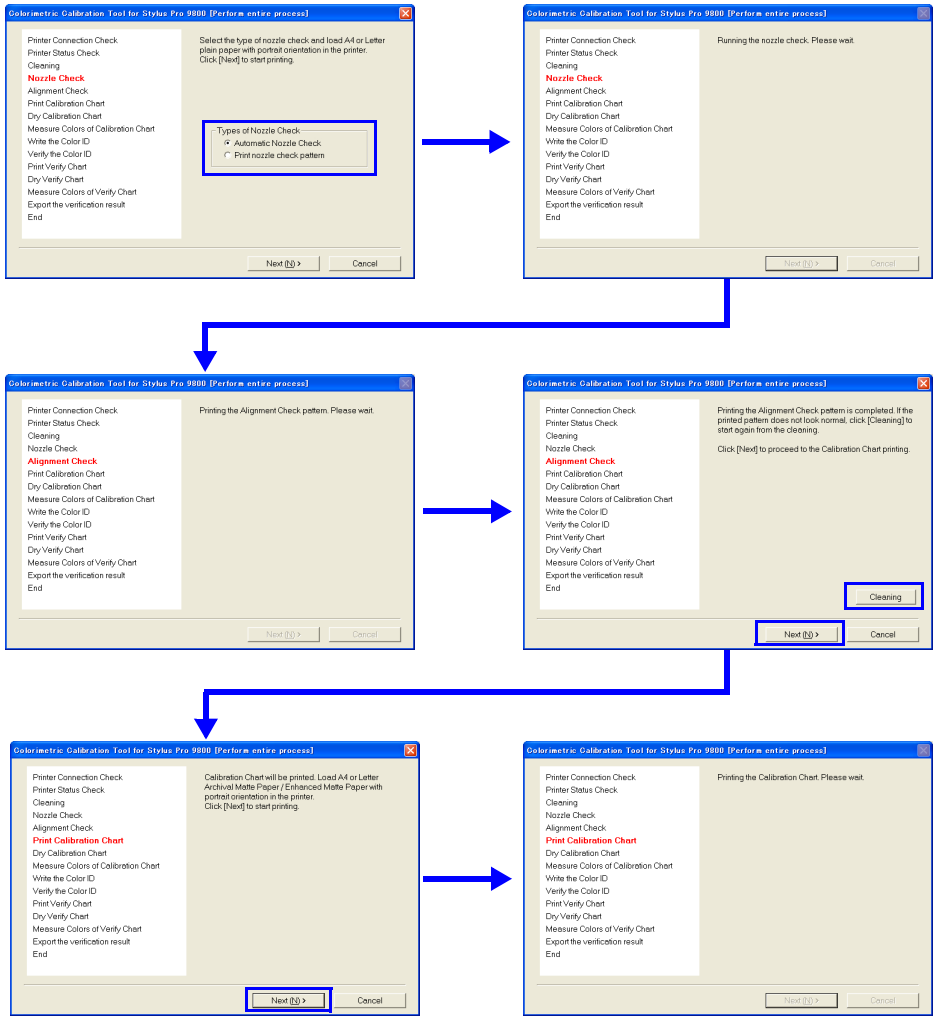

Figure 5-66. Entire Process Screen

13. Make sure there is no missing dots in the nozzle check pattern at the bottom of the calibration chart.
    If there are missing dots, click [Print Calibration Chart Again]. The calibration chart will be printed again after performing cleaning.
    If there are no missing dots, let the chart stand for five minutes until it dries out paying attention not to touch the chart.
14. When the calibration chart dries out (after five minutes), click [Next].
15. Connect a calibrator to the computer, and click [Measure].
16. Place the calibrator on the calibration base plate, and click [Calibrate]
17. Keep the calibrator remain set on the base plate, hold down the button on the side of the calibrator until it beeps.
    Once the calibration completed normally, following screen appears.

Figure 5-67. i1Calibrator

CAUTION

Do not contaminate the white plate of the calibration base plate. If tainted, use alcohol to clean the plate.

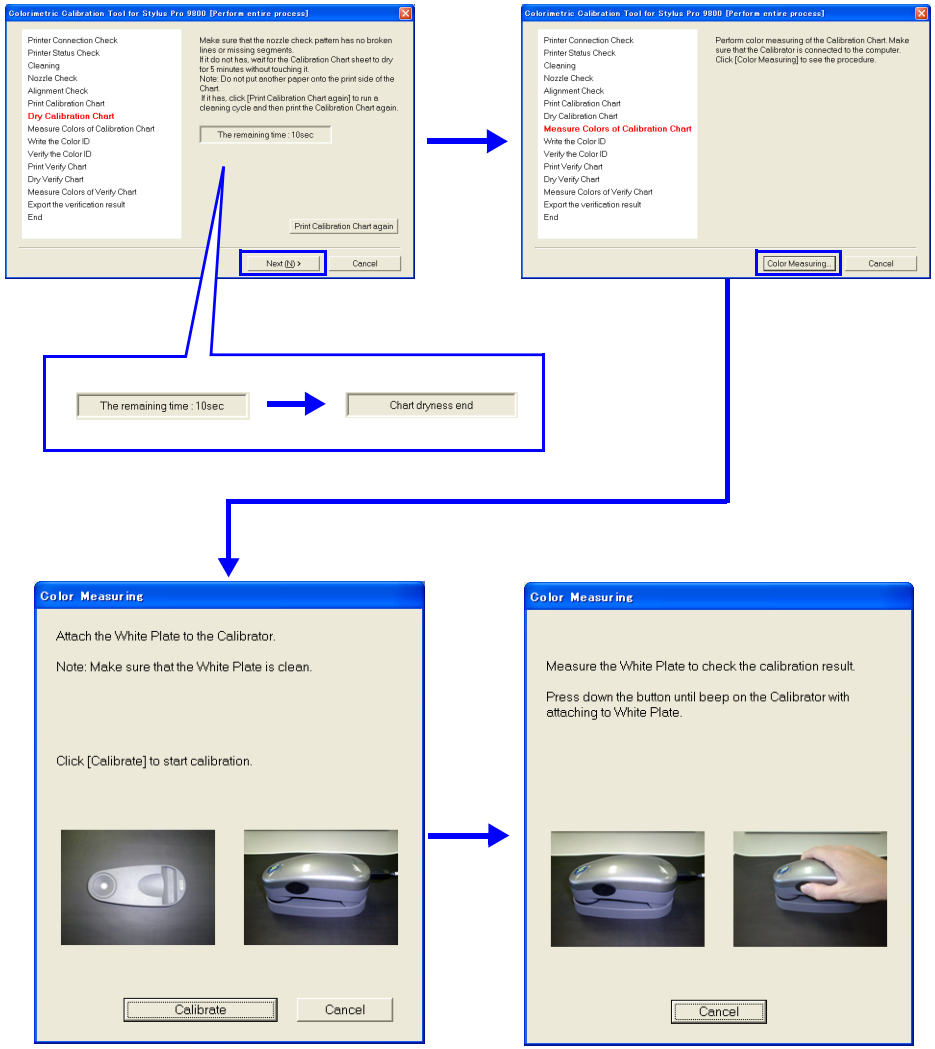

Figure 5-68. Entire Process Screen

18. Make sure that the date and time printed in the second line on the upper left of the chart (measurable time and date) is within the range displayed under the heading “GMT” on the lower screen. (If the date and time is not within the range, it is necessary to print the cart again.)
19. Refer to Figure 5-70, lay the chart on the black paper (or sheet) with the upper part of the chart facing left side, and set the scanning ruler onto the bottom most patch line.

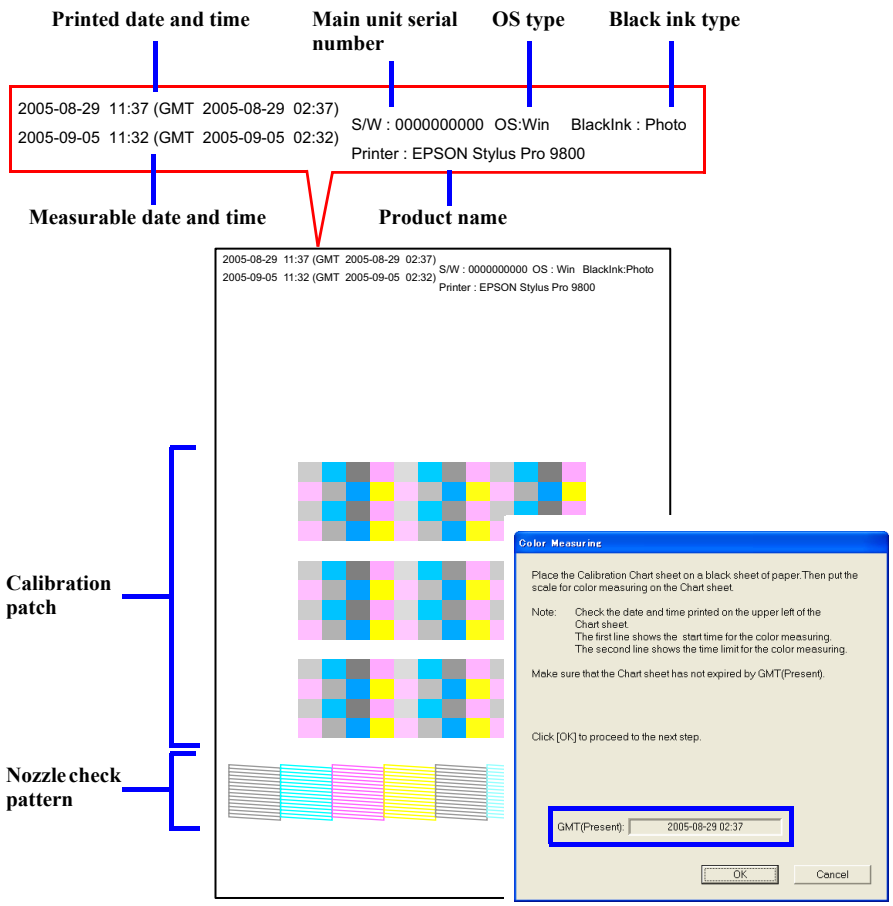

Figure 5-69. Measurable Time and Date Check

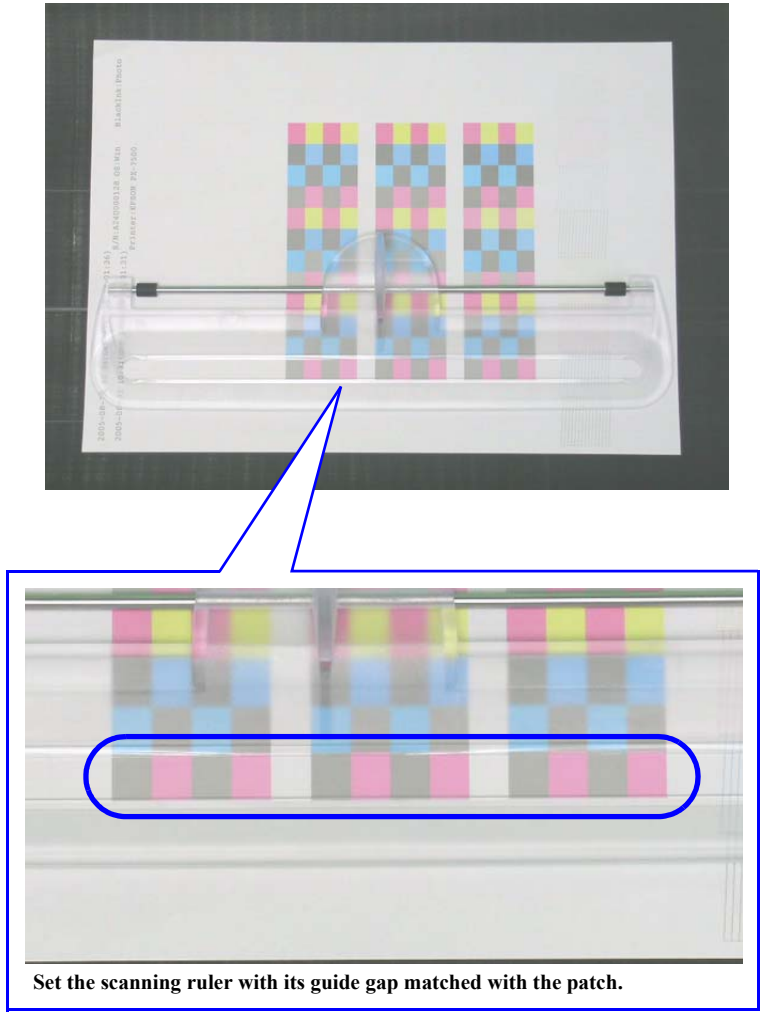

Figure 5-70. Setting the Chart and the Scanning Ruler

20. Click [OK] and follow the instructions (following procedure) displayed on the screen to perform color measuring.
    1. Set the calibrator with its measuring part matched with measuring start position (margin) as shown in Figure 5-72.
    2. Press down the button on the side of the calibrator.
    3. When it beeps, keep holding down the button and scan the patch along the calibration guide to measuring end position (margin).
    4. Once the measuring is complete, release the button.
    5. Repeat Step 1 through 4 twice for the same patch line.
    6. Repeat Step 1 through 5 to measure the bottommost line to the top line. (The line that needs to be measured is displayed on the screen.)
21. Once all the lines (8 lines) are measured, click [OK].

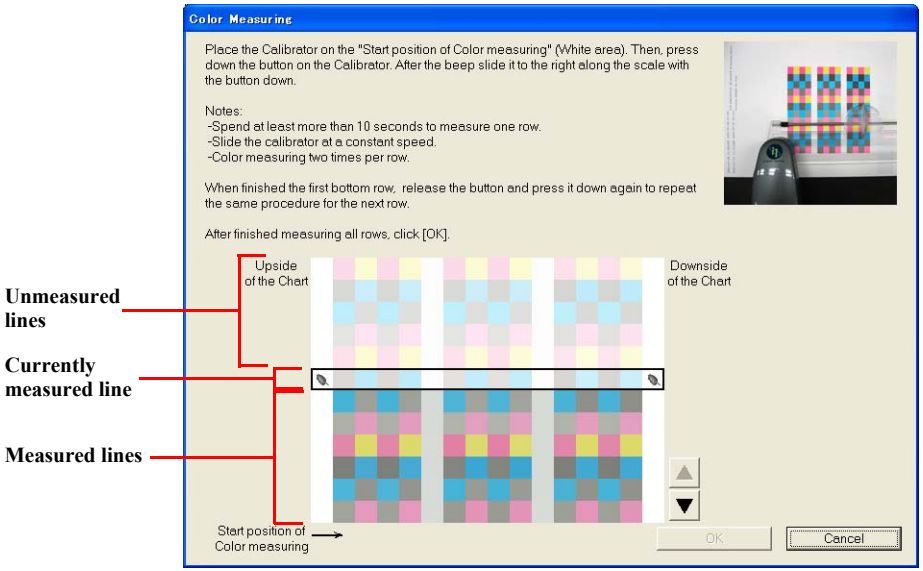

Figure 5-71. Color Measuring Screen

CAUTION

When measuring colors, pay attention to the instructions below.

- **Take more than 10 seconds to measure one line.**
- **Keep the scan speed constant as possible.**
- **Measure each of the lines twice. (Measure the line as instructed on the program screen.)**
- **Place the chart on a flat surface. The calibrator and the ruler must be attached firmly to the chart in order to measure the colors accurately.**
- **Do not scan any places other than the one shown in Figure 5-72.**
- **If a color-measuring error occurs or the measured values are completely out of the standard values, a warning mark (⚠) appears. In this instance, check the instructions mentioned above and retry the color measuring again.**
- **If an error mark (⊗) appears, check the instructions mentioned above and retry the color measuring again.**

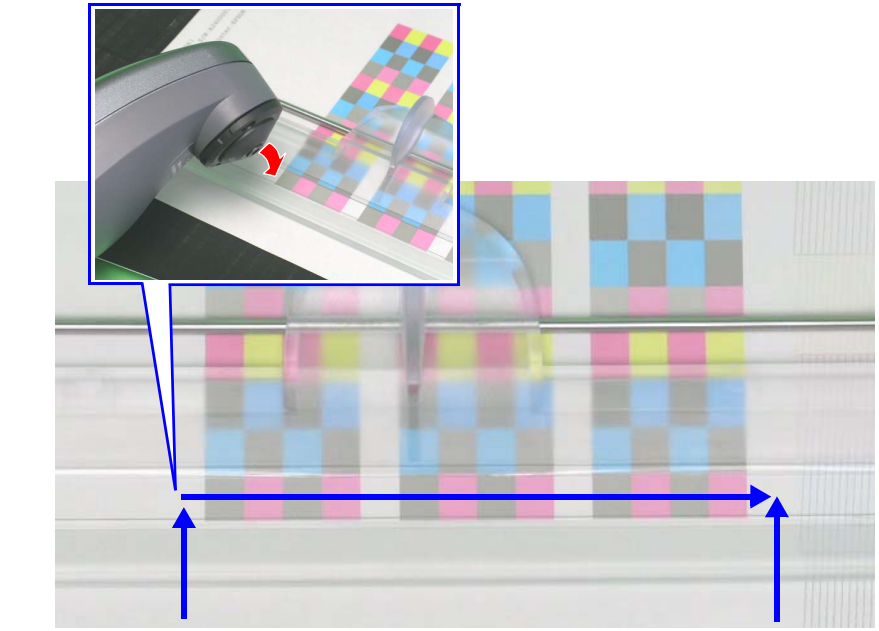

Figure 5-72. Setting the Calibrator/Measuring Position

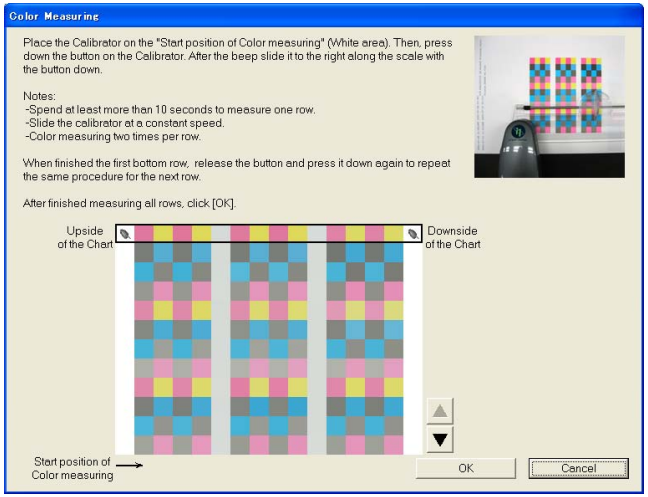

Figure 5-73. Color Measuring Screen

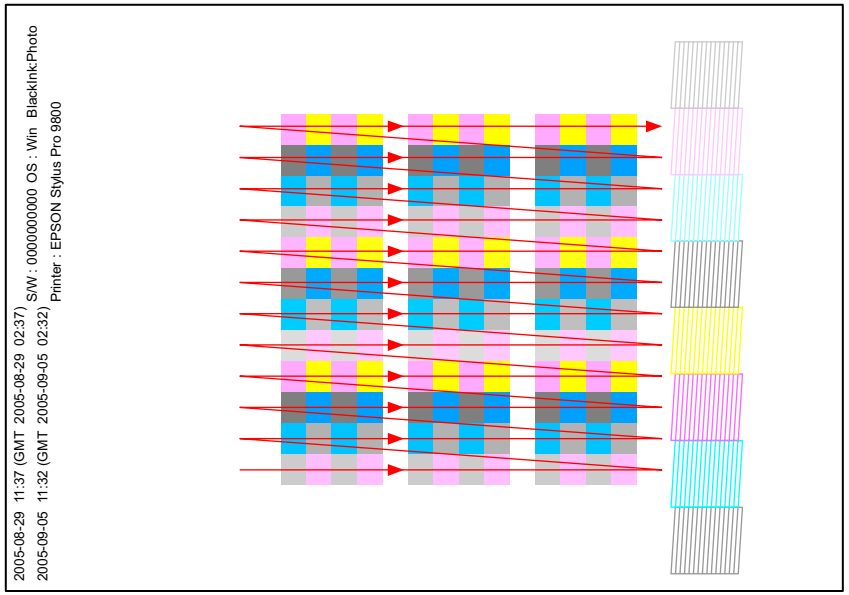

Figure 5-74. Color Measuring Order

22. Make sure that the “READY” message is displayed on the printer LCD panel, and click [Next] to write the Color ID to the printer main unit.
23. When the writing is complete, click the [Next] button.

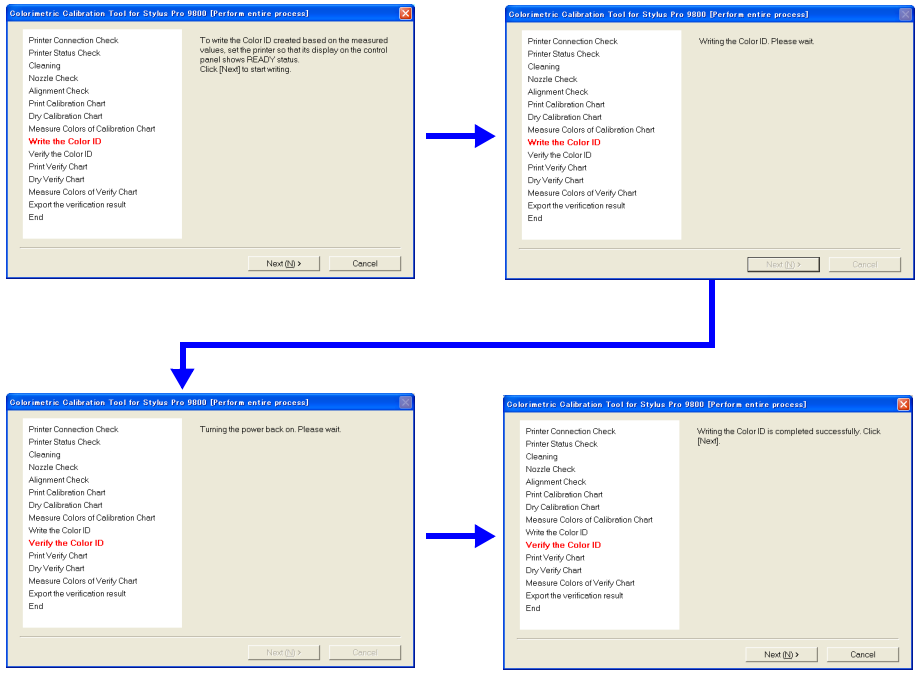

Figure 5-75. Entire Process Screen

24. Load an A4-sized Archival Matte Paper vertically on the paper tray, and click [Next] to print the first page (Sheet1) of the verify chart.

CAUTION

Never touch the printed calibration chart.

25. When the first page of the verify chart is printed to the last, load an A4-sized Archival Matte Paper vertically on the paper tray, and click [Next] to print the second page (Sheet2) of the verify chart.
26. Make sure that there is no missing dot in the verify chart.
    If there is any defect, click [Print Verify Chart Again]. The verify chart will be printed again after performing cleaning.
    If there are no missing dots, let the chart stand for five minutes until it dries out paying attention not to touch the chart
27. When the verify chart dries out (after five minutes), click [Next].
28. Connect the calibrator to the computer, and click [Measure].
29. Place the calibrator on the calibration base plate, and click [Calibrate].
30. Keep the calibrator remain set on the base plate, hold down the button on the side of the calibrator until it beeps.
    Once the calibration completed normally, following screen appears.

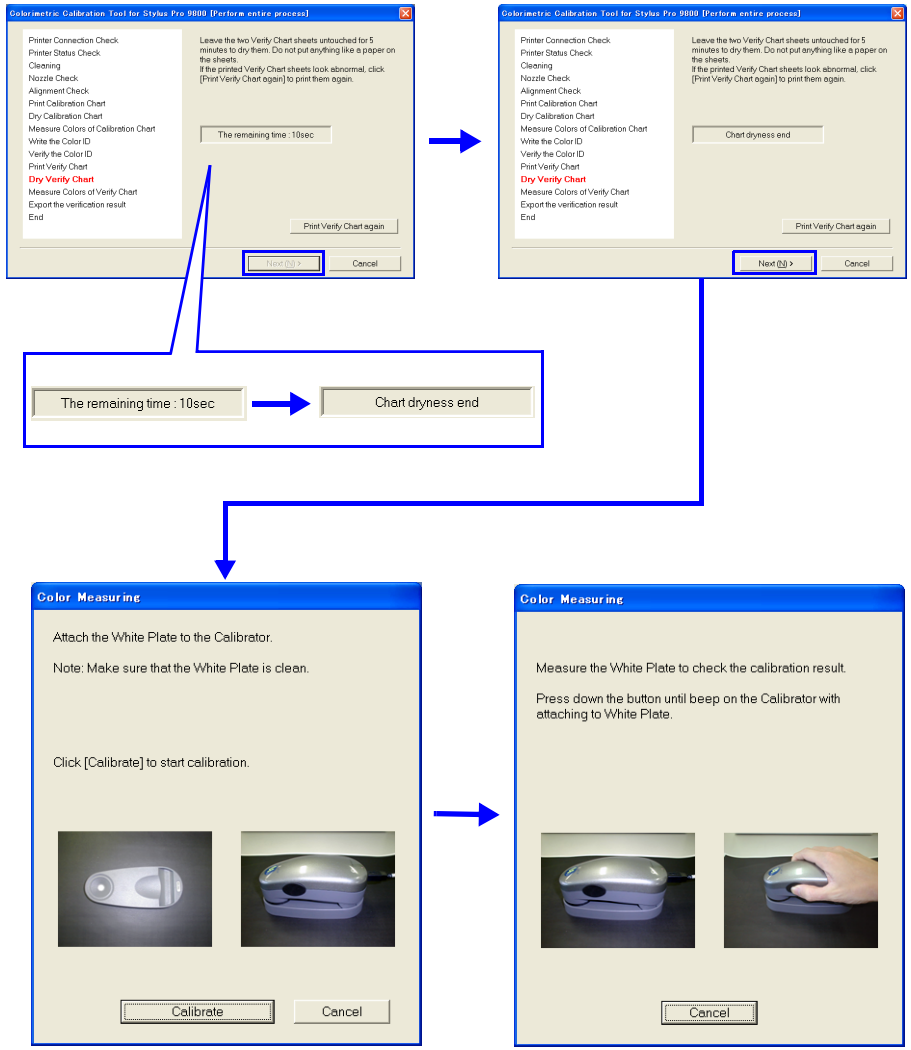

Figure 5-76. Entire Process Screen

31. Make sure that the date and time printed in the second line on the upper left of the chart (measurable time and date) is within the range displayed under the heading “GMT” on the lower screen. (If the date and time is not within the range, it is necessary to print the chart again.)

32. Refer to Figure 5-77, lay the chart on the black paper (or sheet) with the upper part of the chart facing left side, and set the scanning ruler onto the bottommost patch line.

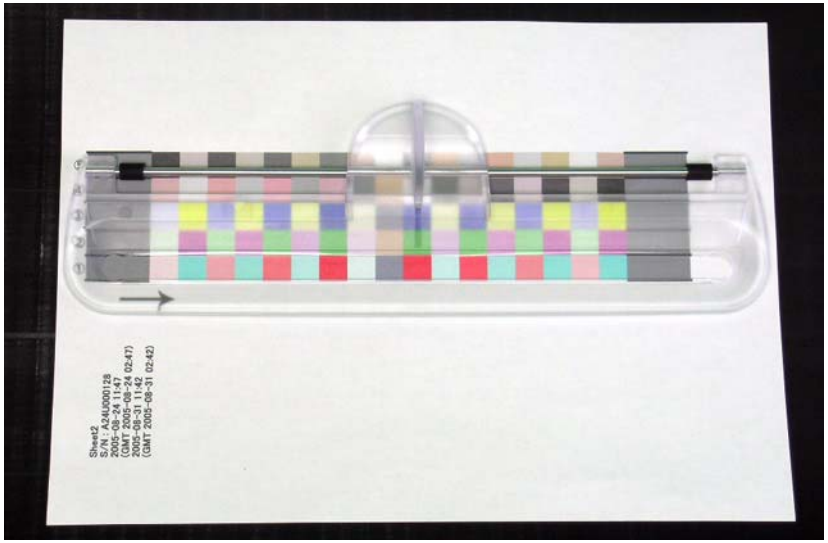

Figure 5-77. Setting the Chart and the Scanning Ruler

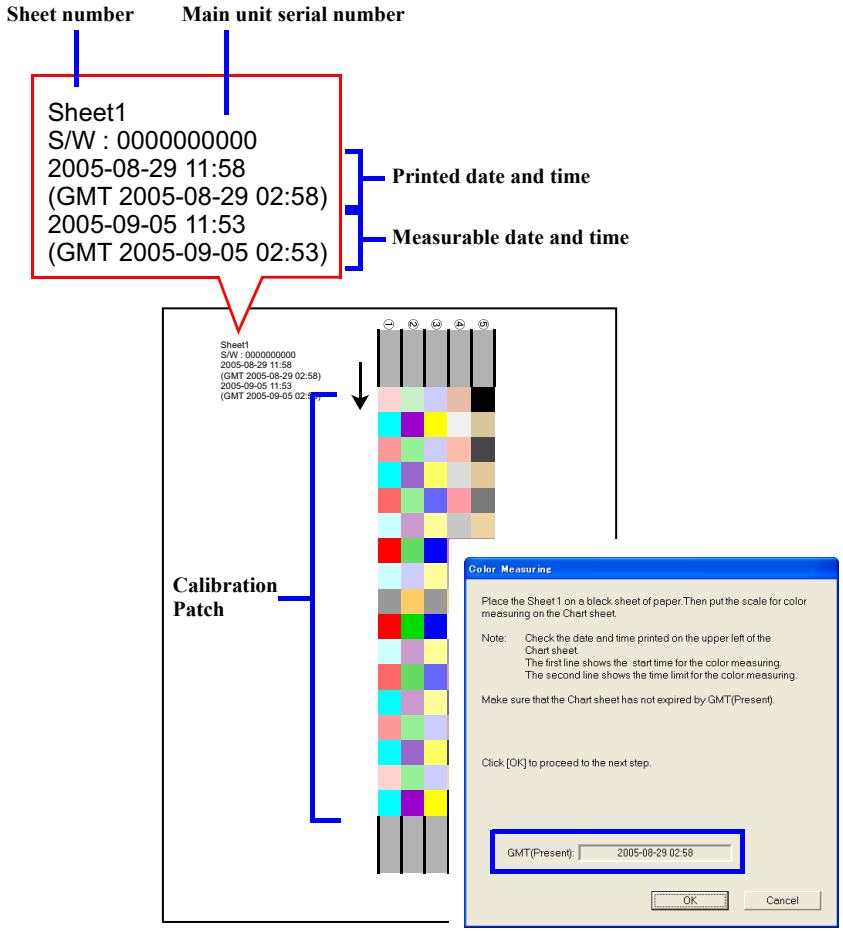

Figure 5-78. Measurable Date and Time Check

33. Click [OK] and follow the instructions (following procedure) displayed on the screen to perform color measuring.
    1. Set the calibrator with its measuring part matched with measuring start position (gray part) as shown in Figure 5-72.
    2. Press the button on the side of the calibrator.
    3. When it beeps, keep holding down the button and scan the patch along the scanning ruler to measuring end position (gray part).
    4. Once the measuring is complete, release the button.
    5. Repeat Step 1 through 4 twice for the same patch line.
    6. Repeat Step 1 through 5 to measure the bottommost line to the top line. (The line which needs to be measured is displayed on the screen.)
34. Once all the lines (5 lines) are measured, click [OK].
35. Measure Sheet 2 by following Step 31 through 34.

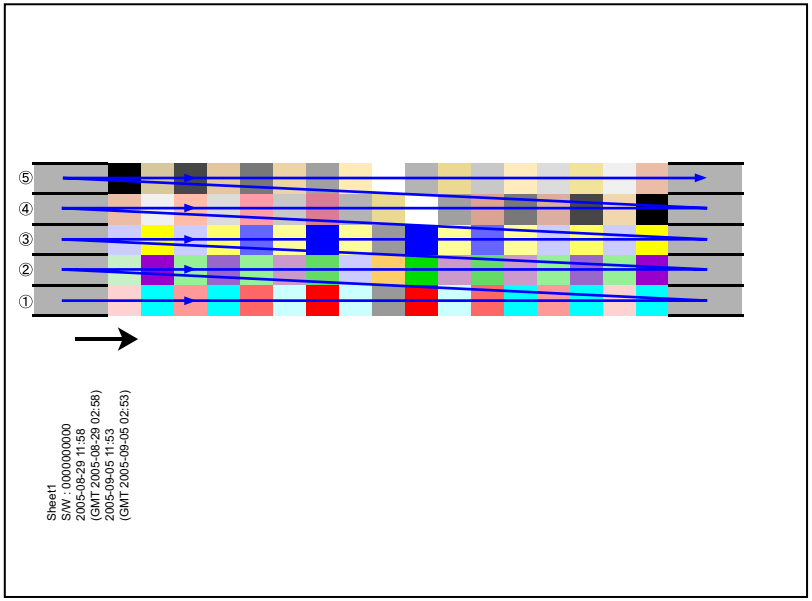

Figure 5-79. Color Measuring Order

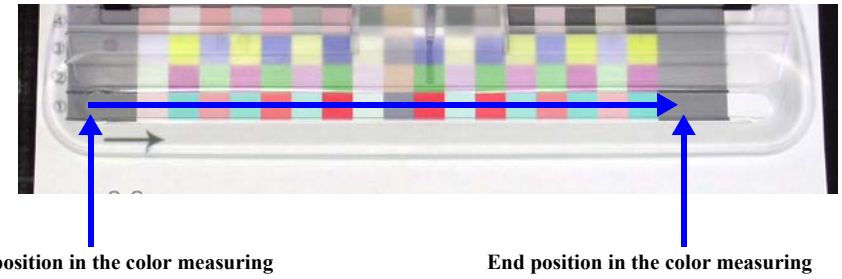

Figure 5-80. Setting the Calibrator/Color Measuring Position

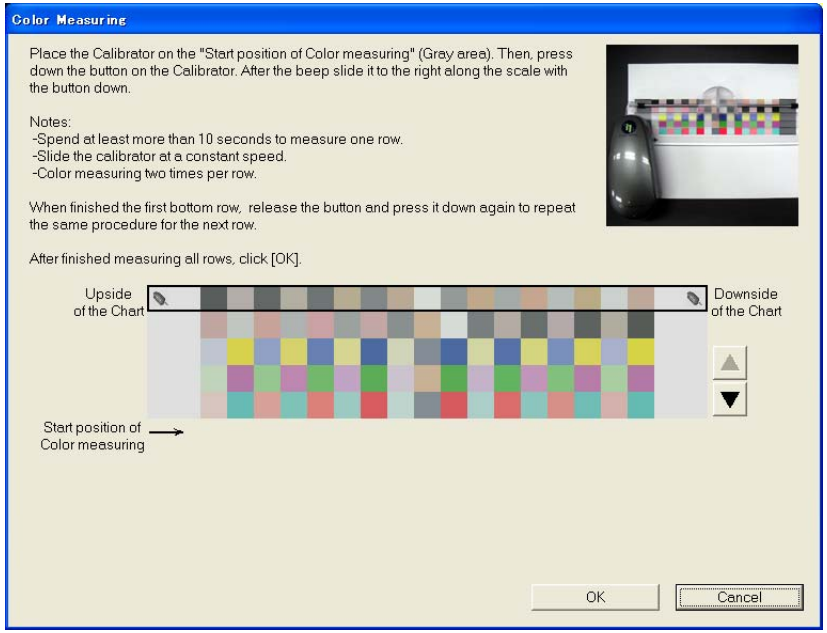

Figure 5-81. Color Measuring Screen

36. Click [Save] to save the result under a new file name (txt file).
37. Click the [End] button.

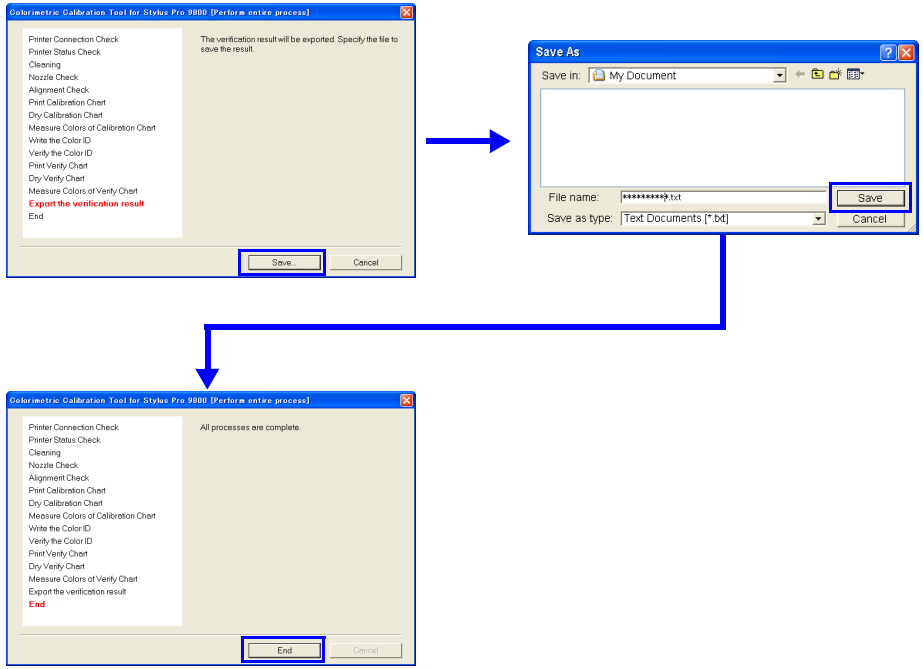

Figure 5-82. Entire Process Screen

ADJUSTMENT PROCEDURE (SEPARATE WORKFLOW)

☐ Printing Calibration Chart (at repair work site)

1. Turn the printer power on.
2. Start the adjustment program and select [Colorimetric Calibration Tool].
3. Click [Run] to start "Colorimetric Calibration Tool".
4. Click [Print a Calibration Chart].
5. Perform Step 5 through 12 of "Adjustment Procedure (Entire Process Workflow)" to print the Calibration chart.
6. Lay one plain paper on the print surface of the Calibration chart, put them in a clear file together with the alignment check pattern, and send them to a place where the color measuring is carried out.

CAUTION

The printed calibration charts should be sent to a color-measuring site immediately, as the color of the patch may be discolored in a week.

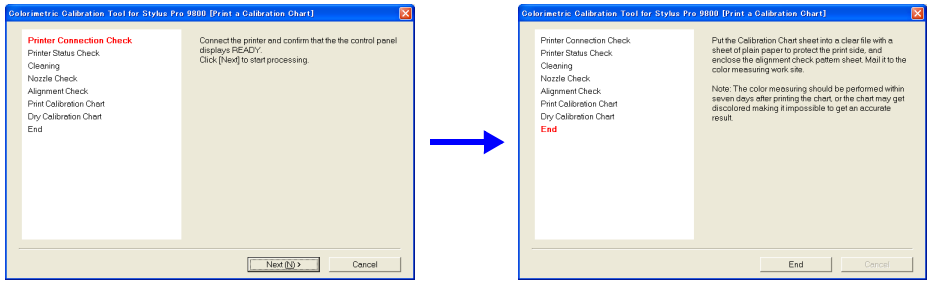

Figure 5-83. Printing Calibration Chart

☐ Creating Color ID Data (at color measuring site)

1. Start the adjustment program, and select [Colorimetric Calibration Tool].
2. Click [Run] to start "Colorimetric Calibration Tool".
3. Click [Create Color ID].
4. Select the type of the currently used black ink from the "BlackInk" pull-down menu, and click [Next].
5. Perform Step 5 through 12 of "Adjustment Procedure (Entire Process Workflow)" to print the calibration chart.
6. Enter the 10-digit serial numbers that are printed on the calibration chart, and click [Next]
7. Click [Save], make sure that the file name is equivalent to the main unit serial number, and save the color ID data (dat format).
8. Click [End].
9. Send the color ID data acquired in the procedure to the repair work site.

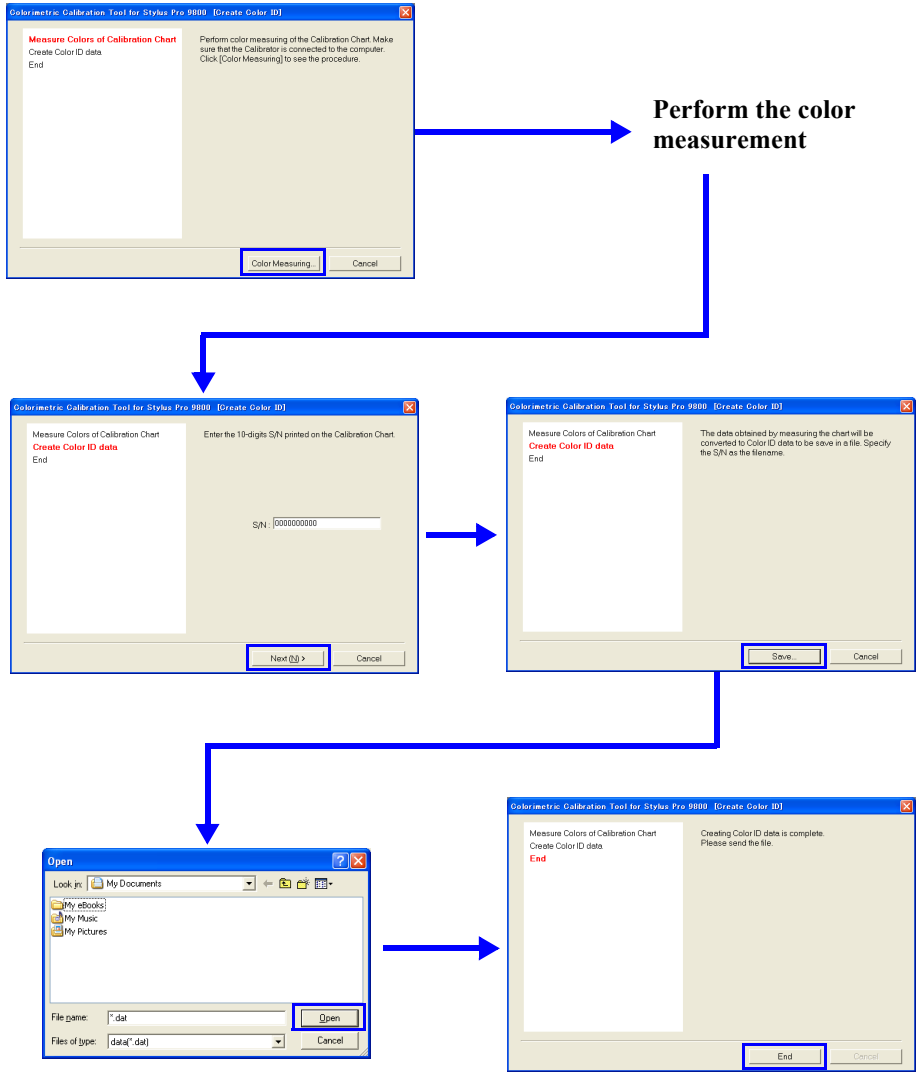

Figure 5-84. Generating Colorimetric Calibration ID Data

☐ Writing Color ID (at repair work site)

1. Start the adjustment program and select [Colorimetric Calibration ID].
2. Click [Run] to start "Colorimetric Calibration Tool".
3. Click [Write Color ID].
4. Perform Step 5 to 6 of "Adjustment Procedure (Entire Process Workflow)" to check the connection status to the printer.
5. Select [File] from "Input Method".
6. Click [Specify the file], select the color ID data file (dat format), and click [Next].
7. Make sure that the S/N shown in the input data is the same as that of the connected printer and that it should be the same as the product number of the printer. Click [Next].
8. When the writing is complete, click [End].

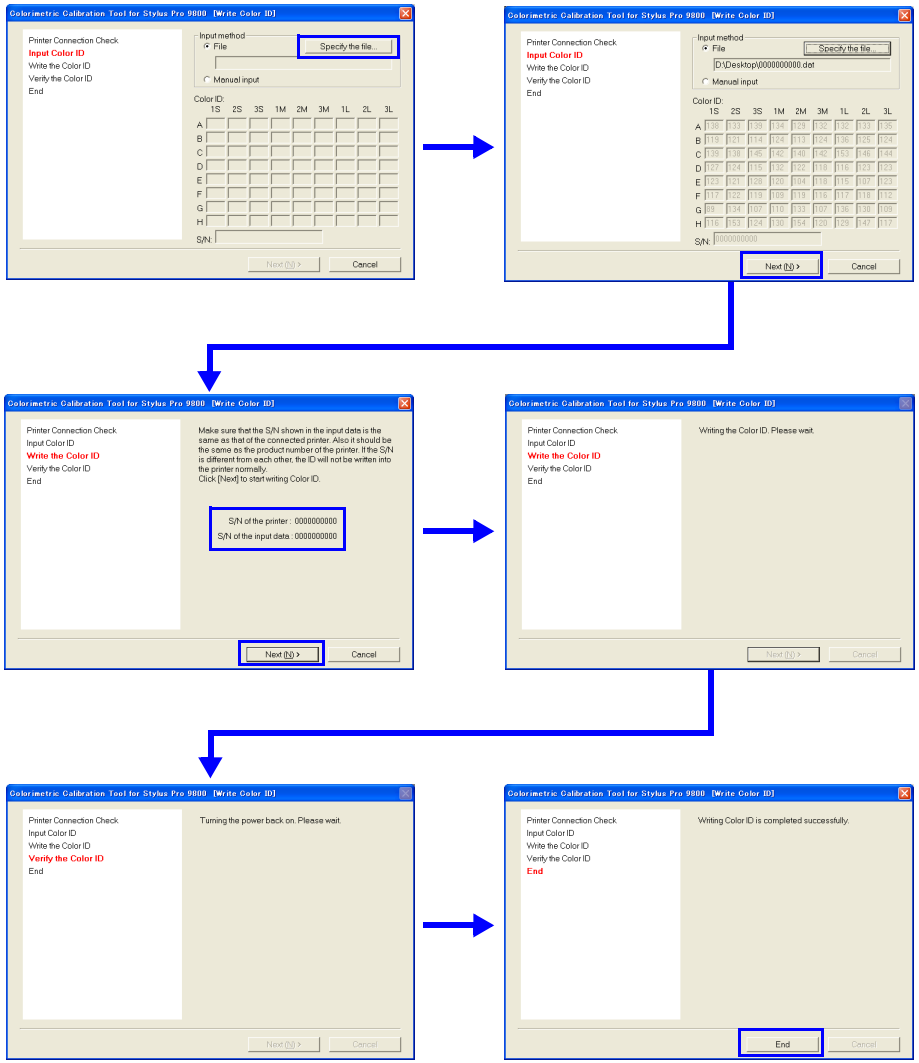

Figure 5-85. Writing Colorimetric Calibration ID

5.4 Advanced Adjustment

5.4.1 Auto Bi-D Adjustment

An automatic Bi-D adjustment by the Ink Mark Sensor can be made using this menu. After printing the adjustment pattern, the subsequent adjustment procedures (scanning the pattern and correction) are performed automatically.
The pattern is printed with the platen gap set to 0.8 and 1.6.

- Paper Used
  - Size: 24” (Stylus Pro 7400/7800)
    44” (Stylus Pro 9400/9800)
  - Type: Doubleweight Matte Paper
- Procedure
  1. Turn the printer ON.
  2. Start up the Adjustment Program and select [Auto Bi-D Adjustment].
  3. Click the [Run] button to print the adjustment pattern.
  4. When the pattern is printed, the printer automatically starts to scan the pattern and performs the corrections. (No manual adjustment is required.)
  5. Click the [Finish] button.

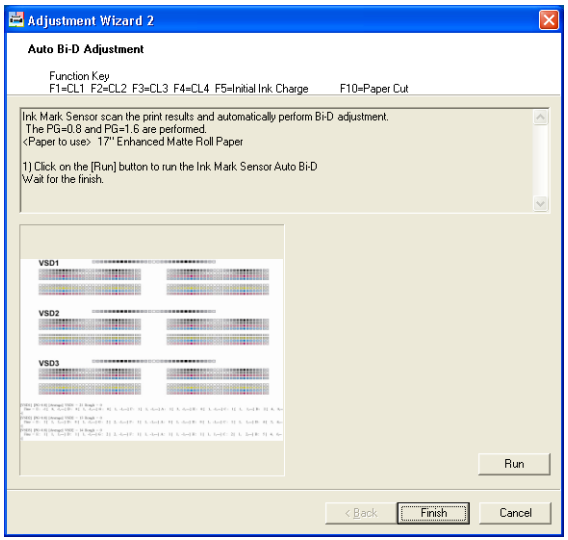

Figure 5-86. [Auto Bi-D Adjustment] Screen

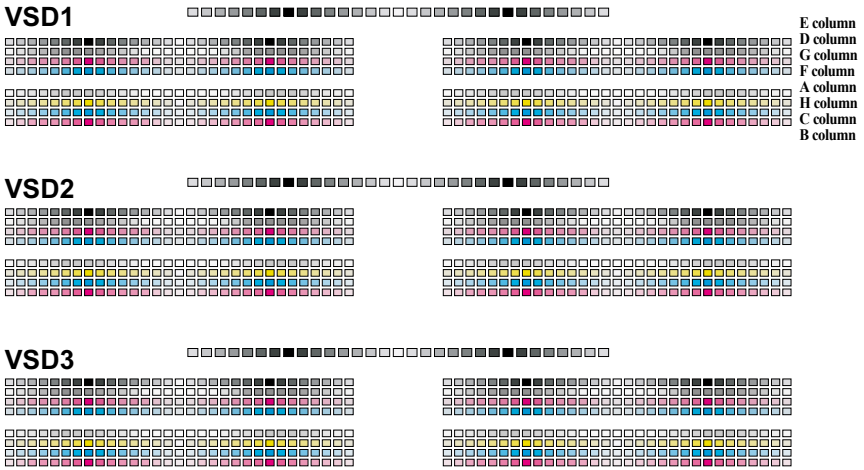

[VSD1] [PG=0.8] [Average] VSD1 = 21 Rough = 0
Fine = E : -1 [0, -1,---] D : 0 [1, -1,---] G : 0 [1, -1,---] F : 1 [1, -1,---] A : 1 [3, -1,---] H : 0 [1, -1,---] C : 1 [1, 1,---] B : 2 [4, 0,---]
[VSD2] [PG=0.8] [Average] VSD2 = 13 Rough = 0
Fine = E : 1 [1, 1,---] D : 0 [1, -1,---] G : 2 [2, -1,---] F : 1 [1, -1,---] A : 0 [1, -1,---] H : 0 [1, -1,---] C : 1 [1, 1,---] B : 4 [3, 4,---]
[VSD3] [PG=0.8] [Average] VSD2 = 14 Rough = 0
Fine = E : 1 [1, 1,---] D : 1 [1, -1,---] G : 2 [2, -1,---] F : 1 [1, -1,---] A : 1 [1, -1,---] H : 1 [1, 1,---] C : 2 [1, 2,---] B : 5 [4, 6,---]

Figure 5-87. Adjustment Pattern

5.4.2 Manual Bi-D Adjustment

This menu allows you to perform a Bi-D adjustment by visually checking the print alignment.

- ☐ Paper Used
  - ■ Size: 24” (Stylus Pro 7400/7800)
    44” (Stylus Pro 9400/9800)
  - ■ Type: Doubleweight Matte Paper
- ☐ Procedure

1. Turn the printer ON.
2. Start up the Adjustment Program and select [Manual Bi-D Adjustment].
3. Select the platen gap setting (①).
4. Click the [Next] button (②).
5. Click the [Print] button to print the Bi-D adjustment pattern for Photo or Matte black (③).
   (The pattern is printed in VSD1, VSD2, and VSD3 modes, so three patterns are printed at a time.)
6. Examine the printout pattern, and select the value for the most sharpest and straight line from the left and right pattern blocks respectively. Then calculate the average of the selected two values. Perform this operation for each of the three mode patterns. Enter the obtained value for each of the three modes into the corresponding edit box (④).

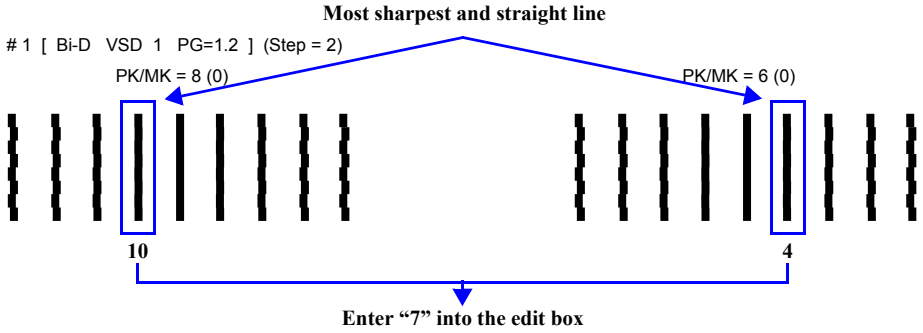

CHECK POINT

The printed pattern is changed 2 steps, but you can input in 1-step unit.

7. Click the [Write] button (⑤) to write the input values. When the writing is completed, click the [OK] button (⑥).
8. Click the [Next] button (⑦).

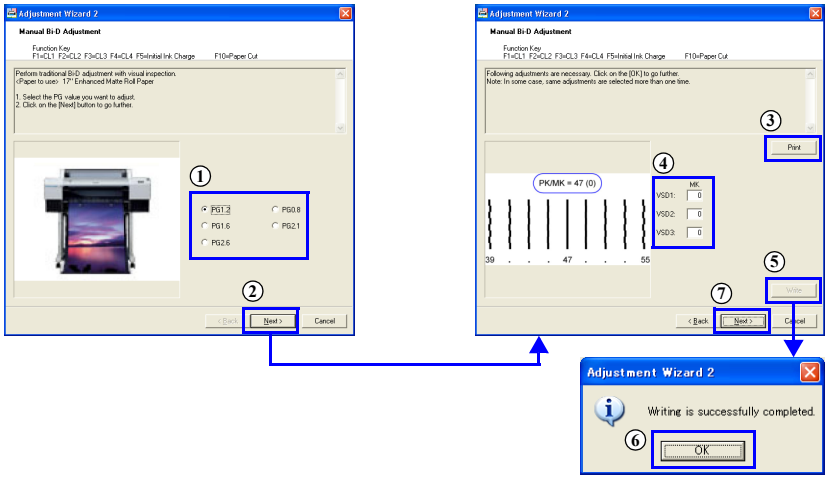

Figure 5-88. [Manual Bi-D Adjustment] Screen (1)

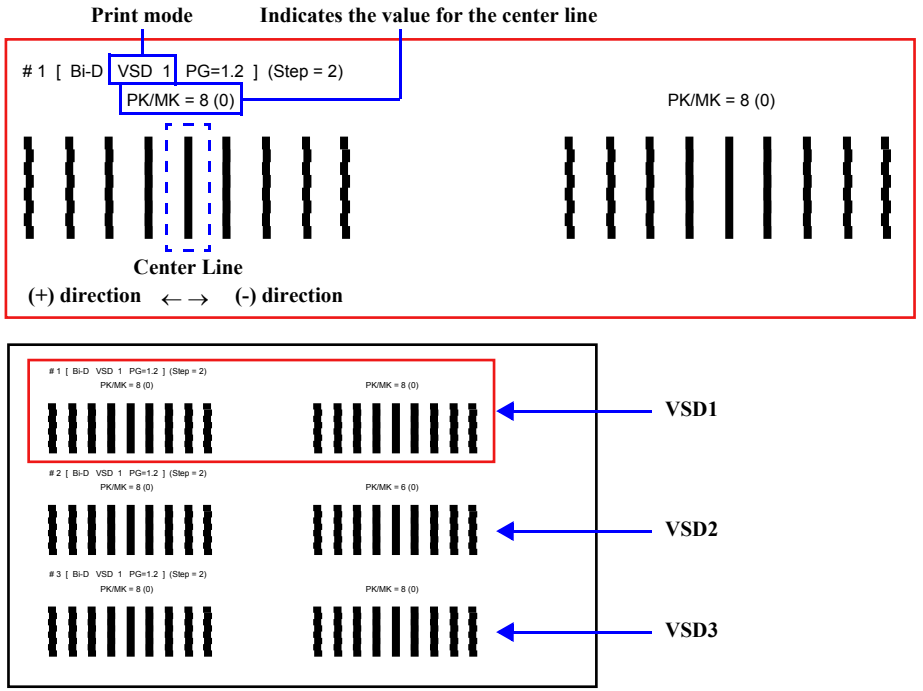

Figure 5-89. Adjustment Patterns (Photo or Matte Black)

9. Click the [Print] button to print the Bi-D adjustment pattern for color ink (⑧). (The pattern is printed in VSD1, VSD2, and VSD3 modes, so three patterns are printed at a time.)
10. Examine the printout patterns for each of the three modes, and select the value for the group of most closely aligned blocks for each mode. Then enter the values into the edit boxes (⑨).

CHECK POINT

The printed pattern is changed 2 steps, but you can input in 1-step unit.

11. Click the [Write] button (⑩) to write the input values. When the writing is completed, click the [OK] button (⑪).
12. Click the [Finish] button (⑫).

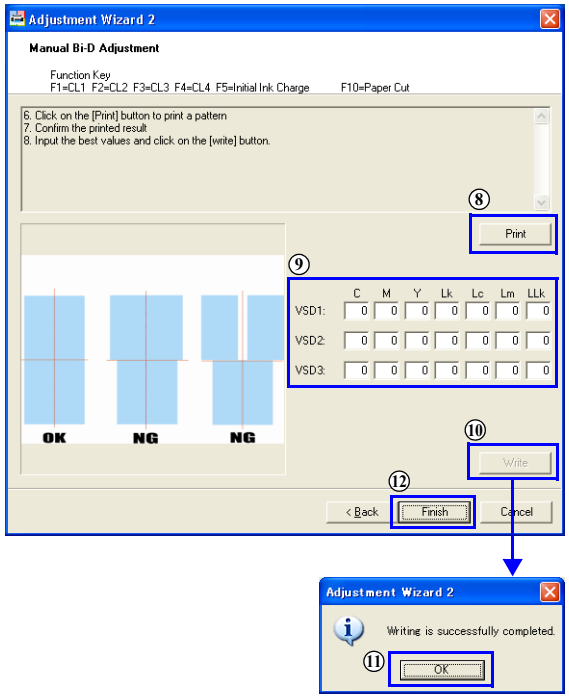

Figure 5-90. [Manual Bi-D Adjustment] Screen (2)

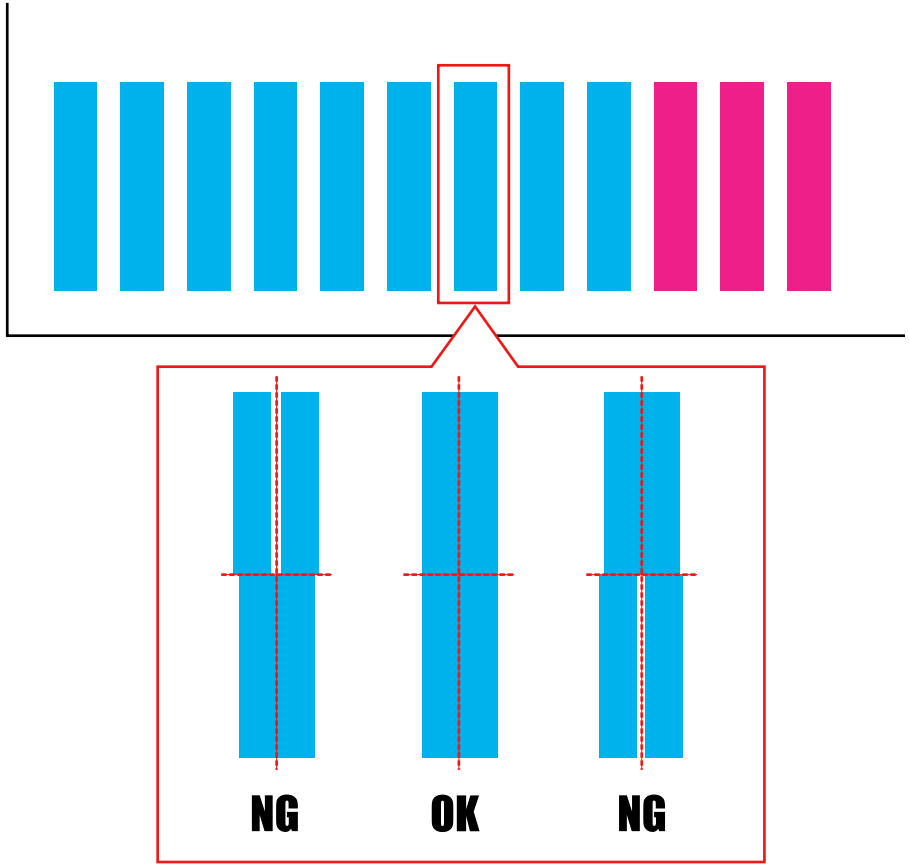

Figure 5-91. Adjustment Patterns (Color)

5.4.3 Destination Setting

☐ Procedure

1. Turn the printer ON.
2. Start up the Adjustment Program and select [Change Model Name].
3. Select the [Others] and click the [Run] button to set the destination setting onto the NVRAM.
4. Click the [Next] button.
5. Click the [Check] button to display the currently set model name. After confirming the name, click the [OK] button.
6. Click the [Finish] button.

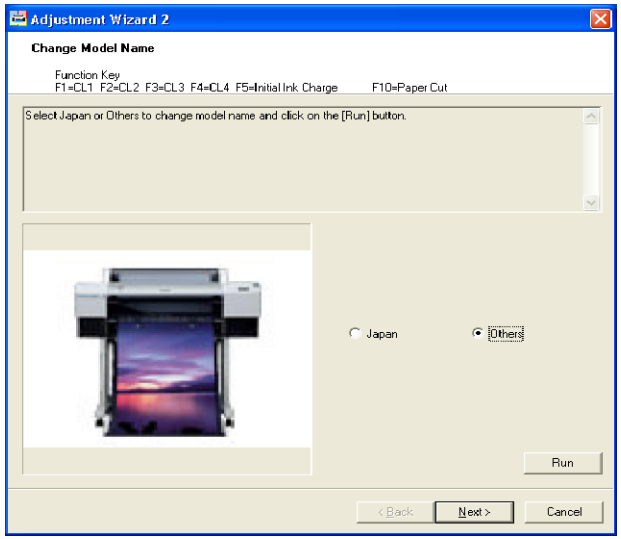

Figure 5-92. [Destination Setting] Screen (1)

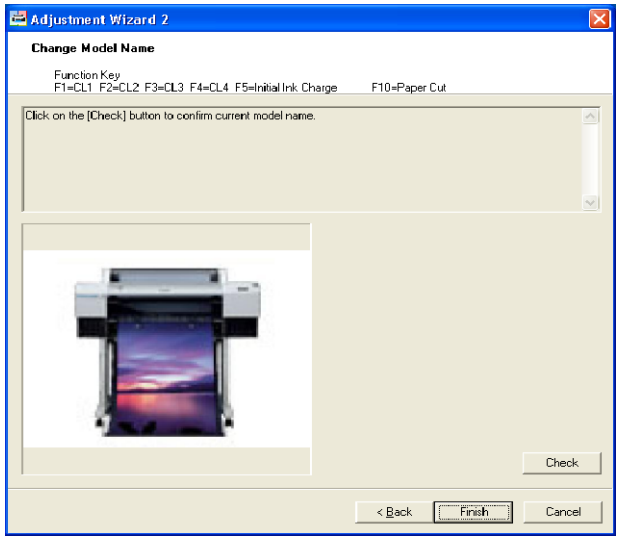

Figure 5-93. [Destination Setting] Screen (2)

Figure 5-94. [Destination Setting] Screen (3)

5.4.4 PF Micro Feed Adjustment (Bi-D)

Print quality on media used by the user can be adjusted using the EPSON LFP Remote Panel.

The EPSON LFP Remote Panel has the following functions:

- ☐ Adjustment:
  Adjustment of the paper feed amount and the microweave.
- ☐ Printout settings:
  Prints out the correction values of the paper feed amount and the microweave stored on the printer.
- ☐ Settings Initialization:
  Returns the settings for the paper feed amount and the microweave to their factory default.

CHECK POINT

For the operation method of the EPSON LFP Remote Panel, refer its help function.

- ☐ Procedure
  1. Turn the printer ON.
  2. Start up the Adjustment Program and select [PF Micro Feed Adjustment (Bi-D)].
  3. Click the [Run] button to run the EPSON LFP Remote Panel.
  4. Select [Paper Feed Adjuster], and perform the paper feed amount (Adjust) and the microweave adjustments (MicroWeave Adjustment).

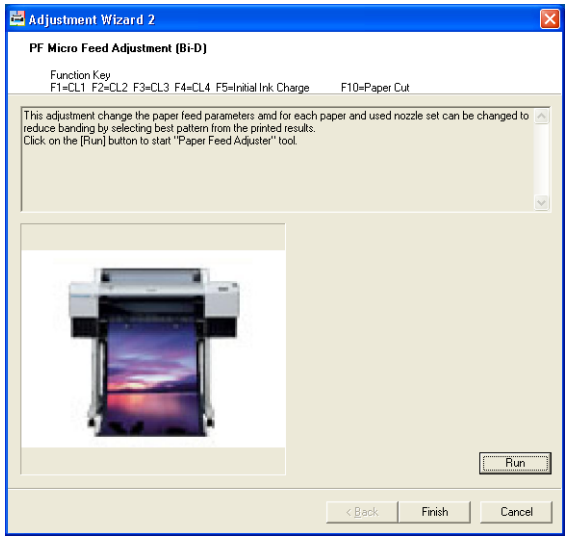

Figure 5-95. [PF Micro Feed Adjustment (Bi-D)] Screen

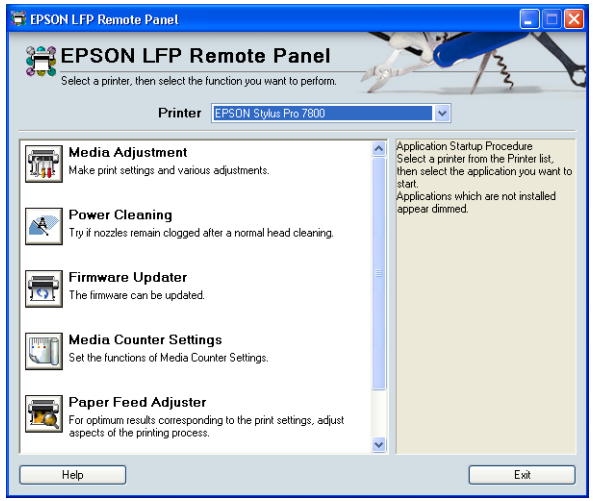

Figure 5-96. EPSON LFP Remote Panel Startup Screen

5.5 Check Results

5.5.1 Check Nozzle

This menu allows you to check the ink nozzles for clogging. If they are found to be clogging, perform a cleaning and then check them again.

- ☐ Paper Used
  - ■ Size: 24” (Stylus Pro 7400/7800)
    44” (Stylus Pro 9400/9800)
  - ■ Type: Doubleweight Matte Paper
- ☐ Procedure
  1. Turn the printer ON.
  2. Start up the Adjustment Program and select [Check Nozzle].
  3. Click the [Run] button to print a nozzle check pattern.
  4. Check the printout pattern for dot missing.
  5. When no dot-missing is observed, click the [Finish] button to exit out of the menu.
     If the pattern has broken lines or missing segment, perform a cleaning. Then print the pattern again to check.

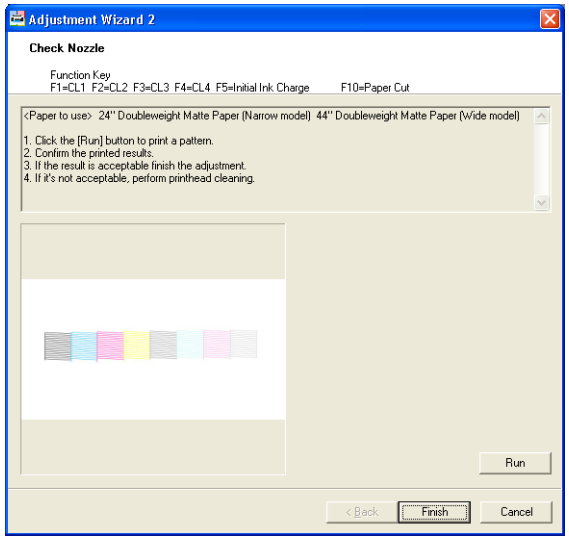

Figure 5-97. [Check Nozzle] Screen

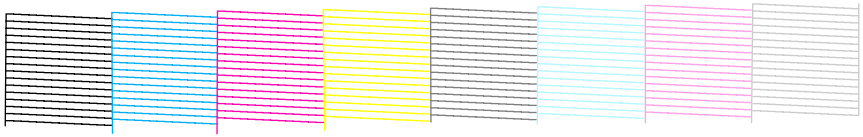

Figure 5-98. Nozzle Check Pattern

5.5.2 Check Alignment

This allows you to check the print alignment for each of the three print modes (VSD1, VSD2, VSD3). If any misalignment symptoms or abnormalities are found on the printed pattern, a cleaning must be performed.

- Paper Used
  - Size: 24” (Stylus Pro 7400/7800)
    44” (Stylus Pro 9400/9800)
  - Type: Premium Glossy Photo Paper
- Procedure
  1. Turn the printer ON.
  2. Start up the Adjustment Program and select [Check Alignment].
  3. Select the print mode and click the [Print] button to print a alignment check pattern.
  4. Check the printout pattern for any misalignment symptoms.
  5. When no misalignment symptom is observed, click the [Finish] button to exit out of the menu.
     If misalignment is found on the pattern, perform a cleaning. Then print the pattern again to check.

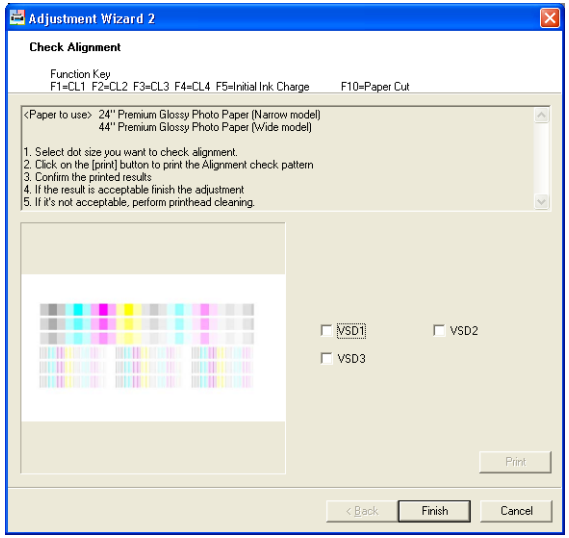

Figure 5-99. [Check Alignment] Screen

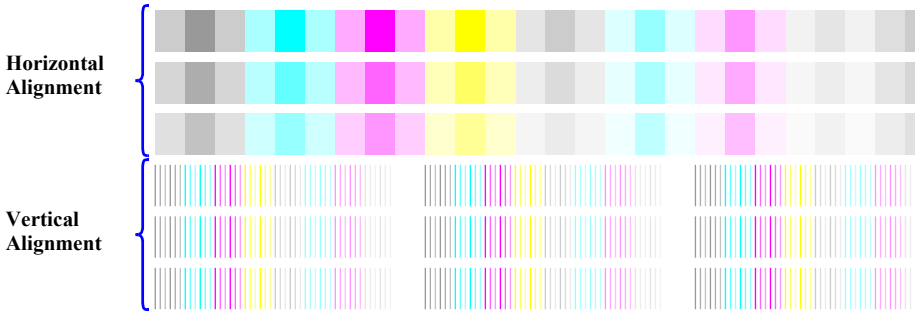

Figure 5-100. Alignment Check Pattern

5.5.3 Print Adjustment Check Pattern

All the adjustment patterns and adjusted parameters stored on the printer can be printed out using this menu.

- ☐ Paper Used
  - ■ Size: 24” (Stylus Pro 7400/7800)
    44” (Stylus Pro 9400/9800)
  - ■ Type: Doubleweight Matte Paper
- ☐ Procedure

1. Turn the printer ON.
2. Start up the Adjustment Program and select [Print Adjustment Check Pattern].
3. Select the [Print All Pattern] or [Print Variables] and click the [Print] button to start the print operation.
   - Print All Pattern
     All adjustment patterns and parameters are printed out at a time.
   - Print Variables
     All adjusted parameters stored on the printer are printed out at a time.

CAUTION

Required length of roll paper for performing the “Print All Pattern” is approx. 3.6 meters. Be sure to check the remaining length or roll paper and keep the paper eject area clear of any obstacles before performing the printing operation.

4. After confirming that all patterns are printed, click the [Finish] button.

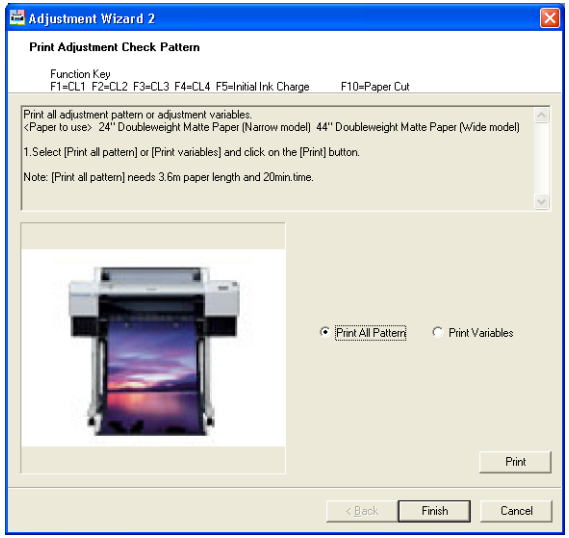

Figure 5-101. [Print Adjustment Check Pattern] Screen

5.5.4 Check Cutting

The printer performs a cutting operation specified number of times when this menu is executed. Check the cutter for wear by examining the cut surface of the paper.

- Paper Used
  - Size: 24” (Stylus Pro 7400/7800)
    44” (Stylus Pro 9400/9800)
  - Type: Doubleweight Matte Paper
- Procedure
  1. Turn the printer ON.
  2. Start up the Adjustment Program and select [Check Cutting].
  3. Enter the desired number of cutting operations into the [Number of cut] edit box and click the [Run] button.
  4. Examine the cutting surface of the ejected paper. Then click the [Finish] button.

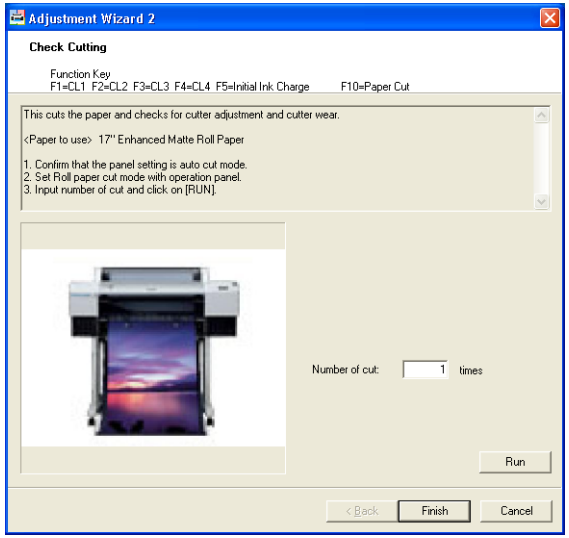

Figure 5-102. [Check Cutting] Screen

5.5.5 Print Image

CAUTION

Before performing the following operations, be sure to select a paper size to print the image.

☐ Procedure

1. Turn the printer ON.
2. Click the [Open] button and select any one of the image files (bmp) in the "tanzaku" folder in the "adjwiz2" folder in which the Adjustment Program is stored.
3. Select media type from the [Media Type] pull-down menu.
4. Click the [Print] button to print the selected image.
5. After checking the printed image, click the [Finish] button.

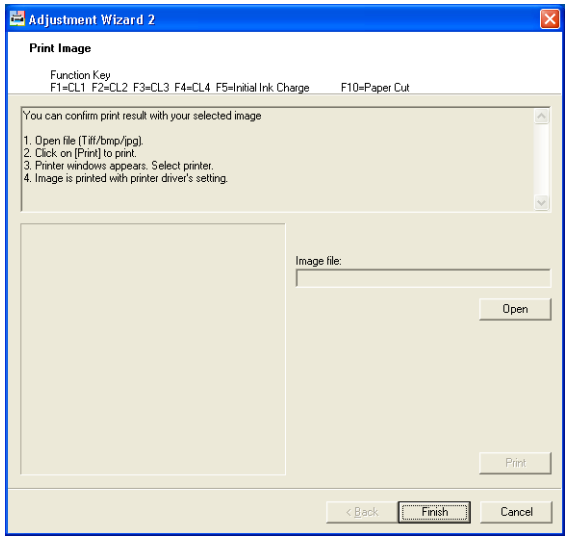

Figure 5-103. [Print Image] Screen

5.6 Reset Counters

5.6.1 Reset PG Switching Counter

☐ Procedure

1. Turn the printer ON.
2. Start up the Adjustment Program and select [Reset PG Switching Counter].
3. Click the [Run] button to reset the PG switching counter.
4. Click the [Finish] button.

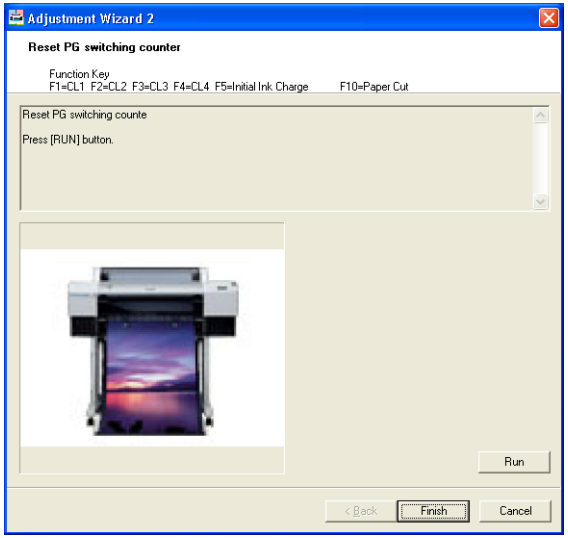

Figure 5-104. [Reset PG Switching Counter] Screen

5.6.2 Reset PF Motor Counter

☐ Procedure

1. Turn the printer ON.
2. Start up the Adjustment Program and select [Reset PF Motor Counter].
3. Click the [Run] button to reset the PF Motor life counter.
4. Click the [Finish] button.

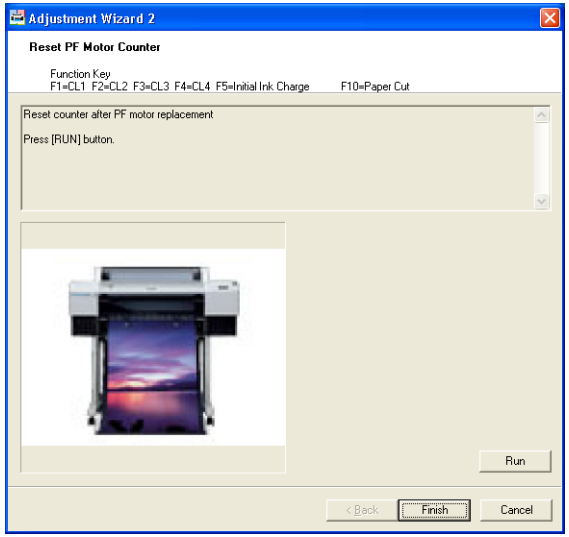

Figure 5-105. [Reset PF Motor Counter] Screen

5.6.3 Reset When CR Unit Change

☐ Procedure

1. Turn the printer ON.
2. Start up the Adjustment Program and select [Reset When CR Unit Change].
3. Click the [Run] button to reset the CR Motor life counter.
4. Click the [Finish] button.

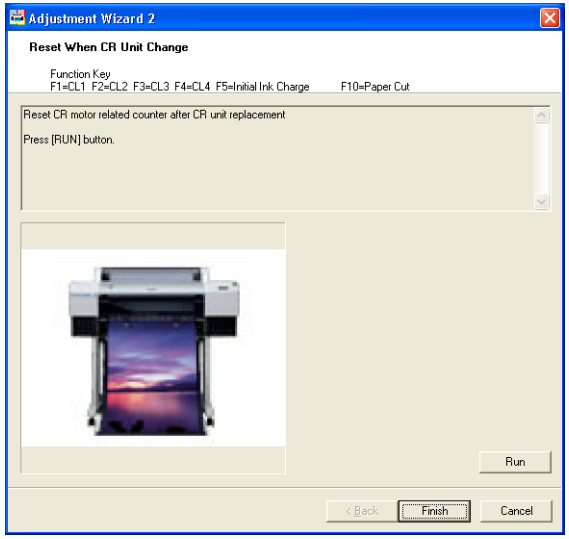

Figure 5-106. [Reset When CR Unit Change] Screen

5.6.4 Reset When Cleaning Unit Change

☐ Procedure

1. Turn the printer ON.
2. Start up the Adjustment Program and select [Reset When Cleaning Unit Change].
3. Click the [Run] button to reset the Cleaning Unit change counter.
4. Click the [Finish] button.

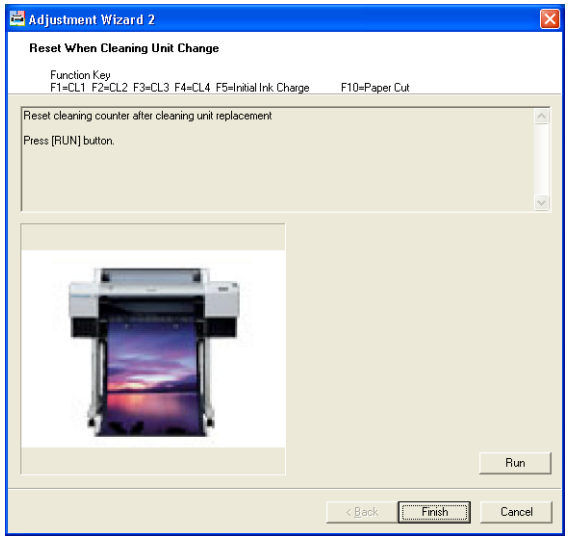

Figure 5-107. [Reset When Cleaning Unit Change] Screen

5.6.5 Reset When PrintHead Change

☐ Procedure

1. Turn the printer ON.
2. Start up the Adjustment Program and select [Reset When Printhead Change].
3. Click the [Run] button to reset the Head Unit change counter.
4. Click the [Finish] button.

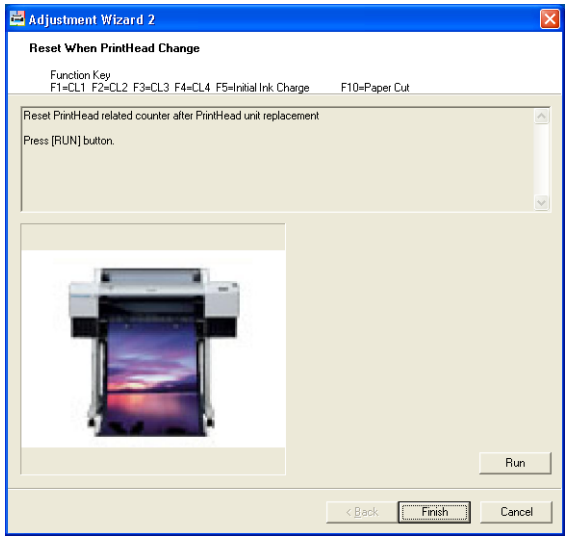

Figure 5-108. [Reset When Printhead Change] Screen

5.6.6 Reset When Cutter Solenoid Change

☐ Procedure

1. Turn the printer ON.
2. Start up the Adjustment Program and select [Reset When Cutter Solenoid Change].
3. Click the [Run] button to reset the Cutter Solenoid Unit change counter.
4. Click the [Finish] button.

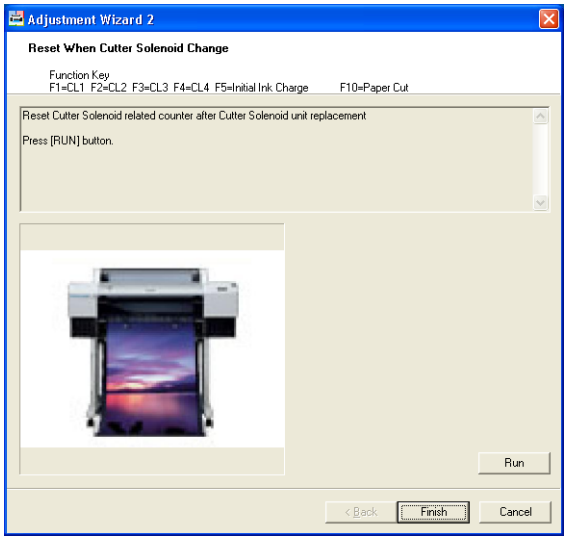

Figure 5-109. [Reset When Cutter Solenoid Change] Screen

5.6.7 Reset Pump Counter

☐ Procedure

1. Turn the printer ON.
2. Start up the Adjustment Program and select [Reset Pump Counter].
3. Click the [Run] button to reset the Pump counter.
4. Click the [Finish] button.

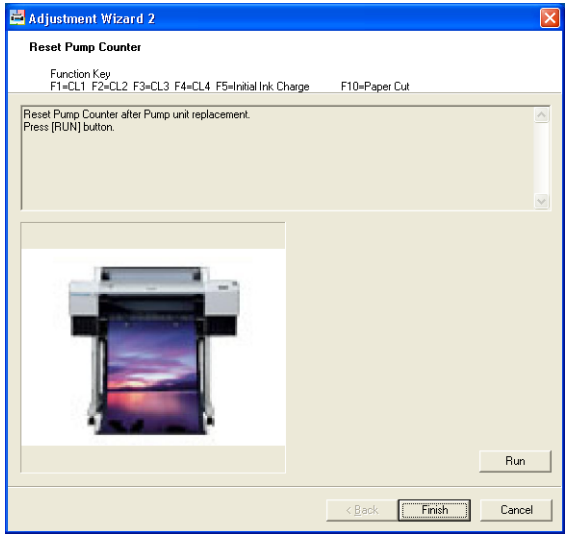

Figure 5-110. [Reset Pump Counter] Screen

5.6.8 Reset Ink Information

☐ Procedure

1. Turn the printer ON.
2. Start up the Adjustment Program and select [Reset ink information].
3. Select the number of ink colors between eight or four colors and click the [Run] button to reset the ink information by nozzle column.
4. Click the [Finish] button.

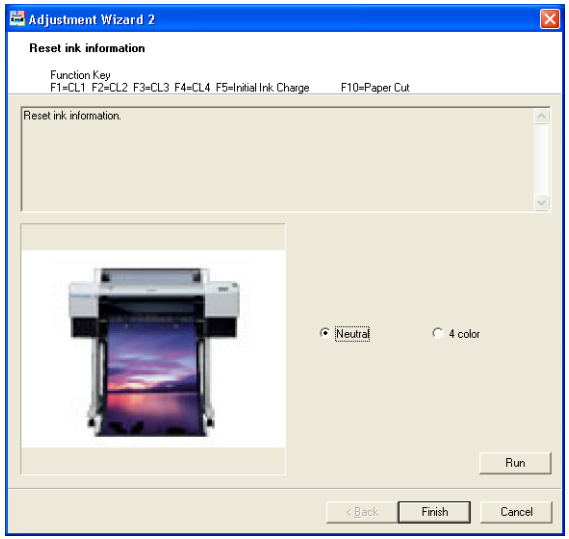

Figure 5-111. [Reset ink information] Screen

5.7 Installing Firmware

The firmware of the printer is stored onto the Flash ROM on the Main Board. Whenever the Main Board is replaced, or when updating the firmware is required, write the firmware on the Flash ROM following the procedure below.

CAUTION

If the printer is turned ON for the first time after the firmware is uploaded on the newly mounted Main Board which does not have any parameters at all, the printer automatically performs the initial ink charge. When the initial ink charge is not necessary, be sure to clear the flag. See "5.3.17 Initial Ink Charge Flag ON/OFF" *(p.337)*.

☐ Tool and System Requirements

Firmware Update Tool

- OS: Windows 98, Me, 2000, XP
- Interface: USB

☐ Procedure

1. Turn both the printer and computer OFF and connect them with a USB cable.
2. First turn the computer ON and then turn the printer ON.
3. Start the Firmware Update Tool.
4. Select the port and the firmware file (UPG format).
5. Click the [Send] button to transfer the firmware data.
6. When the transferring is completed, "Complete" pop-up window will be displayed. Click the [OK] button.
7. When writing the firmware is completed, the printer automatically reboots.

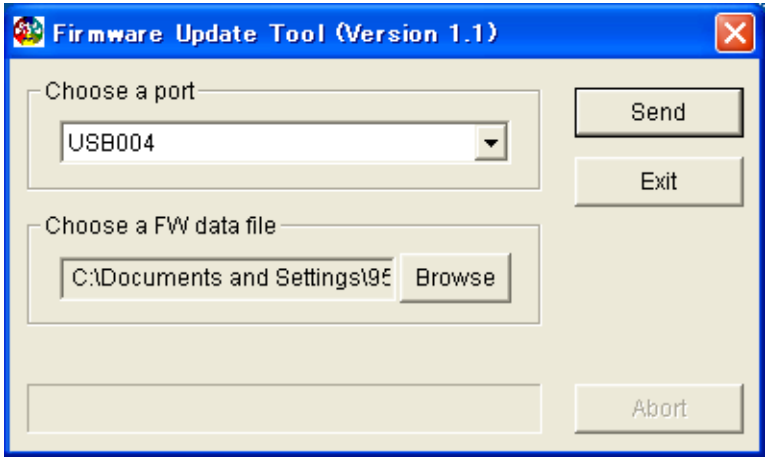

Figure 5-112. [Firmware Update Tool] Screen

Figure 5-113. [Completion] Pop-up Window

5.8 Model Setting (when replacing the Main Board)

☐ Preparation for the setting

- Devices
  PC (The corresponding printer driver and STM must have been installed), New Main Board (after service part)
- Programs
  Adjustment Program, Transfer Tool (FWUpdate.exe), Latest firmware (*.*UPG file)
- Printer
  Ink cartridges, Waste Ink Pads and other consumables must have been installed. There should be no errors indicated on the LCD Panel.*

  Note "*": The consumables must be removed when writing on the new NVRAM as is conventionally done.

☐ Procedure of the setting

1. Make a backup of the NVRAM on the printer. *See Section 5.3.18 on page 338.*
2. Replace the Main Board with a new Main Board. *See Section 4.2.4.1 on page 232.*
3. Turn the printer On and connect it with the PC using a USB cable.
   3-1. Confirm that “UPDATE F/W” is displayed on the LCD panel.
4. Start up the Transfer Tool (FWPpdate.exe).
   4-1. In the “Chose a port”, select a port followed by the connected printer name in parentheses.
5. Send the latest firmware to the printer using the Transfer Tool.

CAUTION !

The firmware comes in wide models (Stylus Pro 9400/9800) and narrow models (Stylus Pro 7400/7800) versions. Be sure to send a correct firmware.

6. “F/W UPDATING” is displayed on the LCD panel, and the printer automatically reboots.
7. After the reboot, “NVRAM CLEAR OK” is displayed on the LCD. Press the MENU button.
   7-1. Turn the printer Off.
8. Reboot the printer in Serviceman Mode.
   8-1. Write the backup data onto the new NVRAM using the Adjustment Program.

CHAPTER

6

MAINTENANCE

6.1 Overview

This chapter provides information on how to maintain the printer in its optimum operating condition.

Basically, servicing on the Stylus Pro 7400/7800/9400/9800 should be performed on-site. Be sure to strictly observe the following precautions to avoid an accident or injury causing the user trouble.

WARNING

- **The power switch is installed on the secondary side of the power circuit, so power is always supplied to the power supply circuit even when the switch is OFF unless the power cord is unplugged from the wall power outlet. Unless otherwise stated (for printing or operation checks), be sure to unplug the power code from the wall outlet before disassembling or assembling the printer to prevent electric shock and damage to the circuit.**
- **The front sensor which detects the Open/Close statuses of the printer cover also functions as an interlock switch for safety purposes. Disabling the switch function is prohibited.**
- **A lithium battery is mounted on the Main Board (control circuit) for memory backup. Be sure to observe the following precautions when handling the lithium battery.**
  - **Be careful not to short the electrode of the battery.**
  - **When replacing the battery, make sure to insert it in correct orientation.**
  - **Never heat the battery or plunge it into the flames.**
  - **Do not put the Main Board directly on conductive materials.**
- **Be extremely careful not to get the ink into your eye or let it come into contact with your skin. If it happens, wash out your eye or skin with water immediately. If any abnormality is found, contact a physician.**

CAUTION

- **Make sufficient work space for servicing.**
- **Set up the printer on a vibration-free and stable flat surface.**
- **The mass of the printers are as follows. Carrying the printer should be performed by the specified number of people and be sure to hold the printer with the positions shown in the figure below.**
  - **Stylus Pro 7400/7800: 49 kg (two persons or more are required)**
  - **Stylus Pro 9400/9800: 90 kg (four persons or more are required)**
- **When air duster is used on the repair and the maintenance work, the use of the air duster products containing the inflammable gas is prohibited.**

<Stylus Pro 7400/7800>

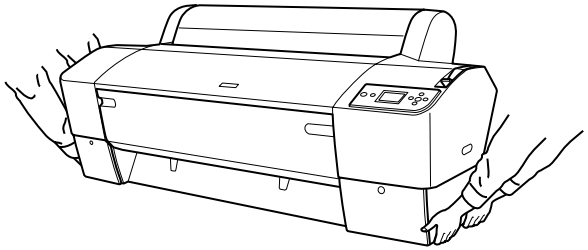

<Stylus Pro 9400/9800>

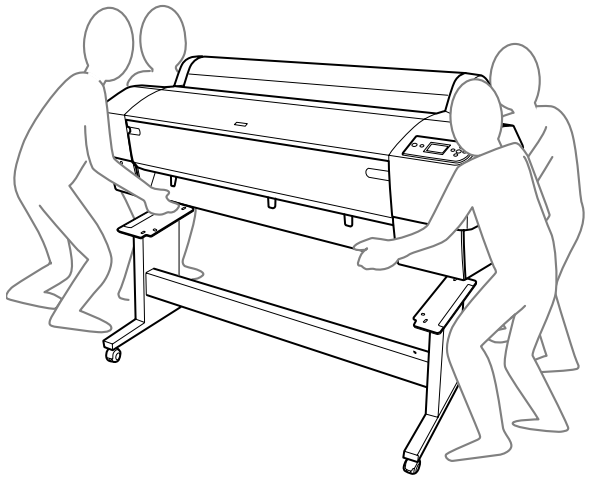

CAUTION

- **Be sure to spread a sheet of paper or cloth on the work space before removing any ink-path-related parts or components to keep the space from being soiled with leaked ink.**
- **Do not touch electrical circuit boards with bare hands as the elements on the board are so sensitive that they can be easily damaged by static electricity. If you have to handle the boards with bare hands, use static electricity discharge equipment such as anti-static wrist straps.**
- **When the printer has to be operated with the covers removed, take extra care not to get your fingers or clothes caught in moving parts such as fans.**
- **The cutter blade is razor-sharp. Be especially careful when handling the cutter.**
- **Carbide blade employed for the cutter blade is hard but brittle. Be careful not to hit it against metal parts of the printer as it can be easily damaged.**
- **When the printer should be repacked for transportation after being used, make sure to follow the steps below after turning the power OFF.**
  1. **Check that the print head is capped properly.**
  2. **Remove the all ink cartridges.**
  3. **Repack the printer using the packaging box, cushioning materials and protective equipment indicated in the "Unpacking and Setup Guide".**

6.1.1 Product Life Information

☐ Periodic Maintenance Items

There is no part or component which should be replaced periodically before the printer itself reaches its end of life indicated below.
If the printer is kept on being used after reaching its end of life, it causes a service call error calling for a replacement of a part before the part breaks down. (Except the consumables such as the Maintenance tank and the cutter.)

■ Product Life

- Stylus Pro 7400/7800: 3,700,000 cycles of the carriage movement
- Stylus Pro 9400/9800: 6,300,000 cycles of the carriage movement

The table below shows the parts and units which causes the replacement requiring error.

Part Name	Maintenance Call	Service Call
CR Motor	0002	00000101
RTC backup battery	TBD	00010023
Cleaning Unit	0040	0001002D
Pressure Pump Unit	0400	0001003F

☐ Life Information

The information on part life can be checked by the PRINTER STATUS menu in the Panel Setting mode. Remaining amount of life is expressed in percentage ("F*****E"). The life counters can be reset by the Adjustment Program.

WARNING

Be careful not to mistakenly reset the life counters for the parts or components which are not replaced or checked. Especially, the waste ink counter "MAIN TANK" in the Adjustment Program should NOT be reset. Doing so adversely affects the printer operation and may result in ink leakage.

6.1.2 Required Maintenance Items

Be sure to check on the following items every time you service the printer.

Item	Points to be Checked	Remedy
Platen, sub platen and L-surface of the paper guide	Paper dust, foreign materials on them	Cleaning If ink has adhered to the parts, wipe it off with a damp cloth and then wipe with a clean, dry cloth.
SCALE, CR (A plate with slits on it used for the CR Encoder detection)	Paper dust, foreign materials on them	Cleaning Replace the Timing Fence If it has scratches or is cracked.
Guide rail on the CR Guide Frame	Foreign materials on it	Cleaning
Sensors located in the paper path • IM (Ink Mark) Sensor • P Rear Sensor, etc.	Foreign materials on them	Cleaning

☐ Cleaning of the Platen and Sub Platen

Brush down paper dust or dirt and then wipe them using OA cleaner. If the paper suction holes are clogged with paper dust, etc., push the dust inside the printer with a precision screwdriver or similar tool.

CAUTION

Be careful not to touch the following parts during the cleaning.
- **Absorbers for borderless printing**
- **Rollers**
- **Print head guide**

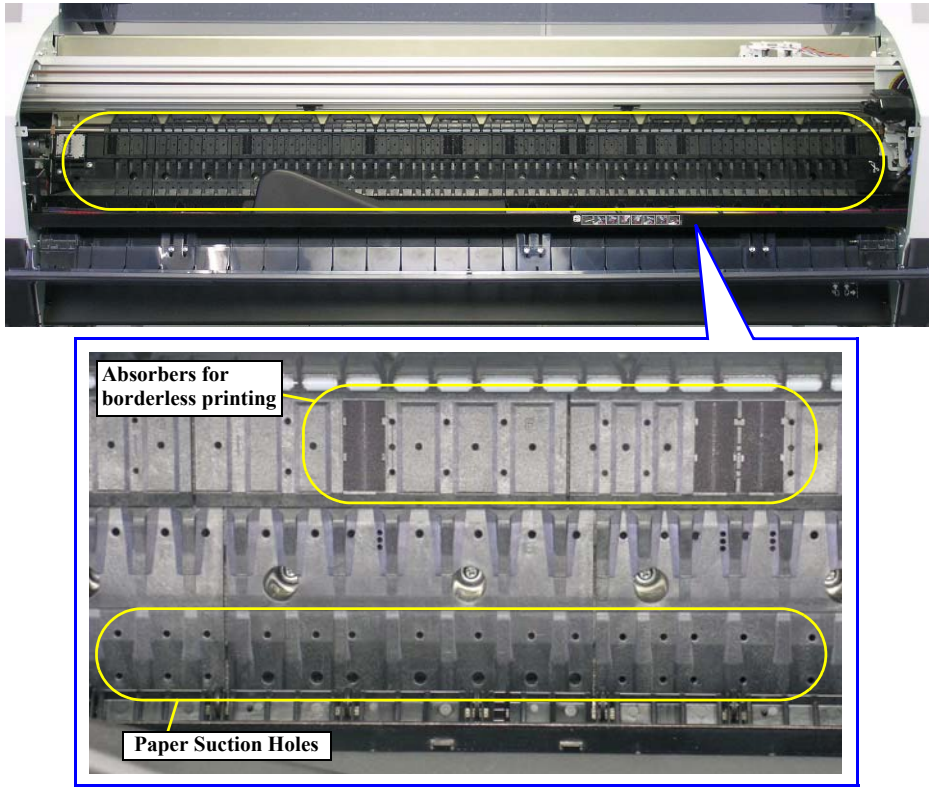

6.2 Lubrication

Lubrication on the Stylus Pro 7400/7800/9400/9800 should be performed as needed. Use only lubricants indicated in the table below.

Name	Amount	Supplier	Part No.
G-26	40 g	EPSON	1080614
Super Multi Oil #32	---	Idemitsu Kosan Co., Ltd.	---

CAUTION

Never use any lubricants other than the specified ones. Doing so may damage the components, shorten their useful life, and result in a malfunction of the printer.

[Lubrication 1]

Part Name	PG Idle Gear
Lubrication Point	1. On the teeth of the three gears 2. Five shaft heads retained by the E-rings 3. Bearing part (one point)
Lubricants	G-26
Amount	1. A drop of 1 mm in diameter for about one third around the each gear 2. A drop of 1 mm in diameter for about 2 mm length on the each E-ring 3. A drop of 1 mm in diameter for 2 mm length on the shaft head
Remarks	Use a small syringe or needle (equivalent to JIS17#).

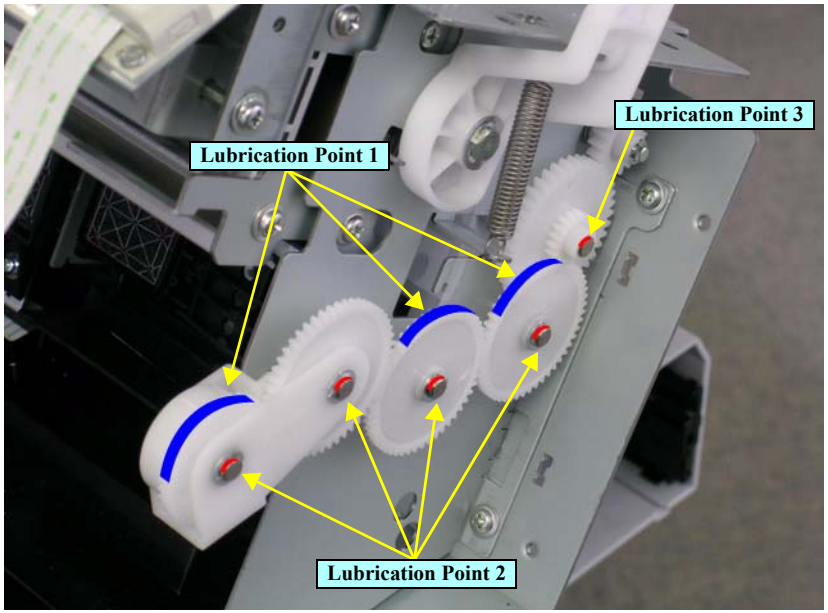

[Lubrication 2]

Part Name	Roll Top Cover
Lubrication Point	On the right side of the Roll Top Cover where contacts with the washer
Lubricants	G-26
Amount	A drop of 1 mm in diameter for around the circle
Remarks	Use a small syringe or needle (equivalent to JIS17#).

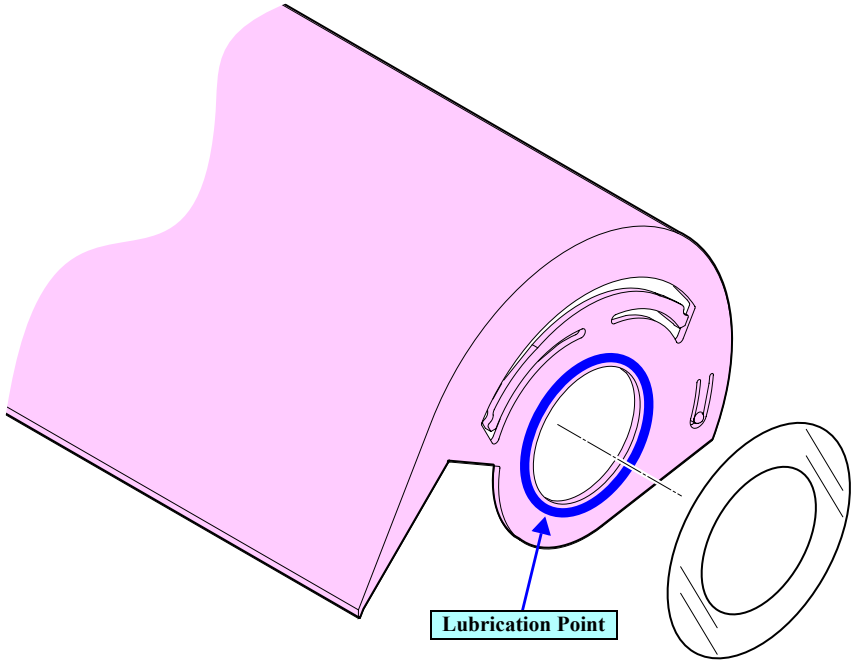

[Lubrication 3]

Part Name	Roll Top Cover
Lubrication Point	On the left and right break pins where contact with the slit-ends of the Roll Top Cover Note : The Stylus Pro 7400/7800 are not equipped with the break pins.
Lubricants	G-26
Amount	A drop of 1 mm in diameter for about one fourth around the each pin
Remarks	Use a small syringe or needle (equivalent to JIS17#).

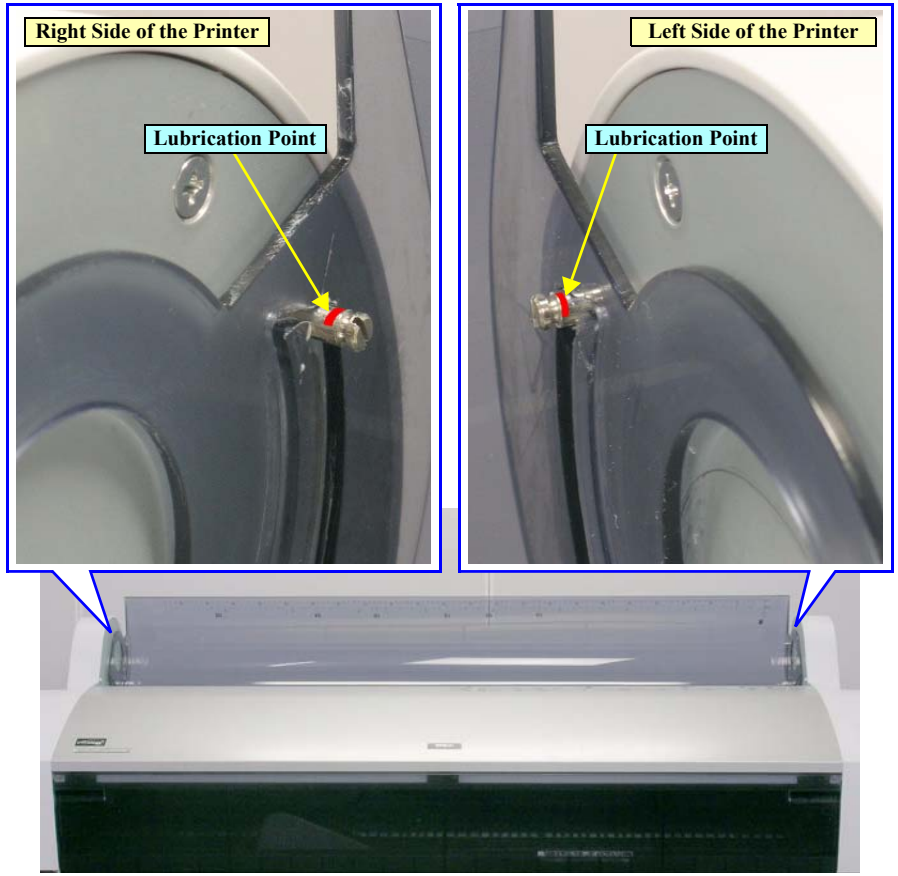

[Lubrication 4]

Part Name	Driven Roller C Assy.
Lubrication Point	Contact point between the Arm Bracket and the Pressure Cam • Stylus Pro 7400/7800: 8 points • Stylus Pro 9400/9800: 14 points
Lubricants	G-26
Amount	A drop of 1 mm in diameter for about 2 mm length on the each contact point
Remarks	Use a small syringe or needle (equivalent to JIS17#).

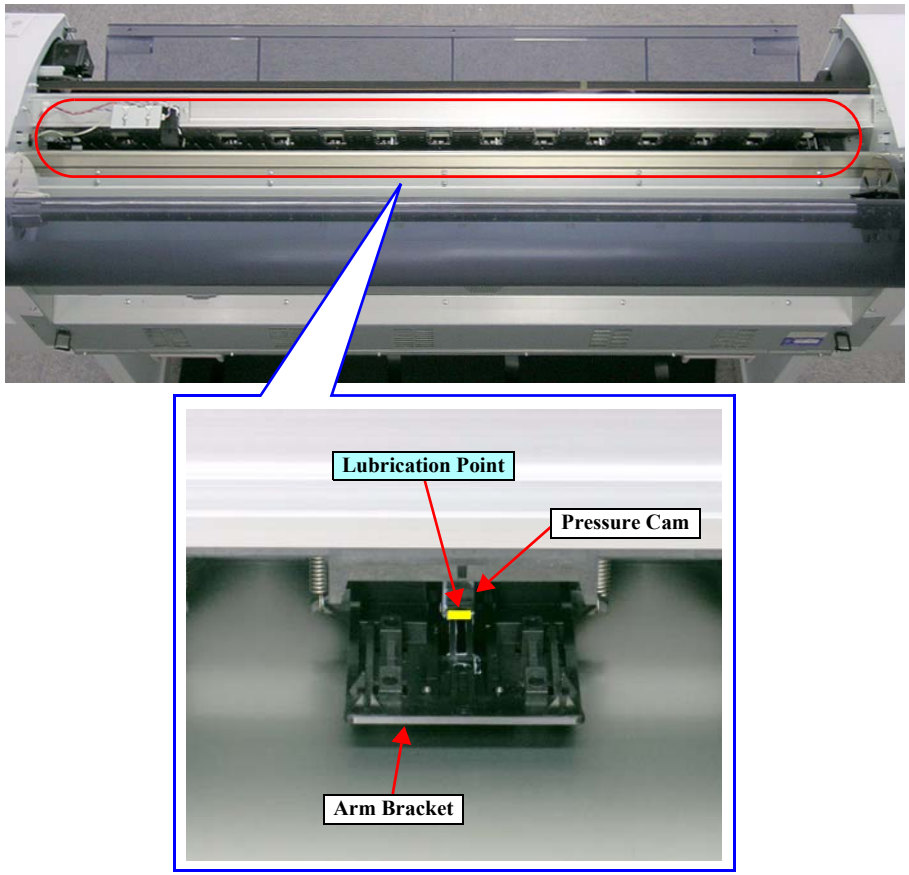

[Lubrication 5]

Part Name	CR Guide Rail
Lubrication Point	Outside four surfaces on the CR Guide Rail on where the roller bearings run through
Lubricants	Super Multi Oil #32
Amount	A drop of 1 mm in diameter for the full-length of each four surfaces
Remarks	• Use a small syringe or needle (equivalent to JIS17#). • Be sure to clean the surfaces before applying the lubricants.

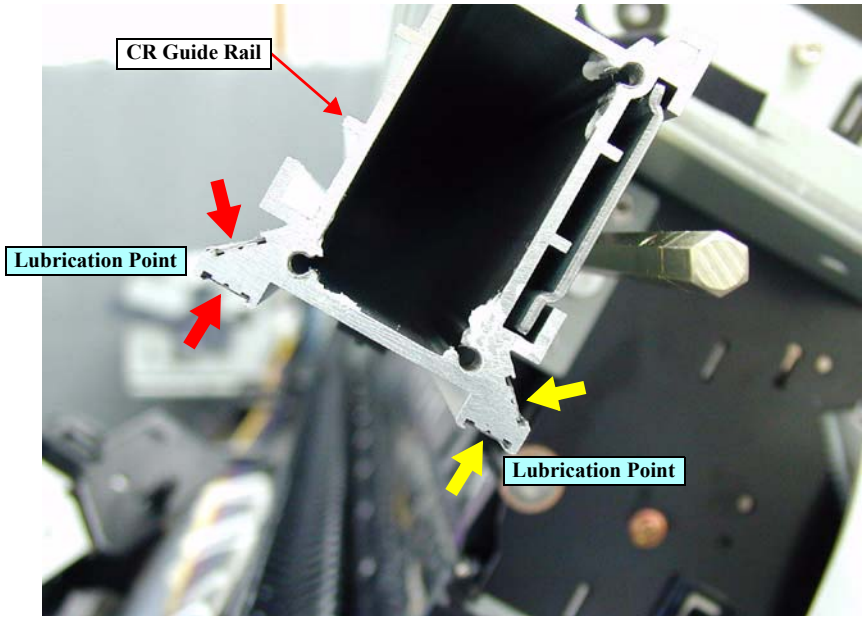

CHAPTER

7

APPENDIX

7.1 Connectors

☐ C594 Main Board

Table 7-1. C594 Main Board Connectors List

CN.No.	Pins	Color	Connected to	Remarks
CN1	14	White	P/S BOARD ASSY. (CN001)	
CN5	36	---	Type-B interface	
CN6	4	---	USB 2.0	
CN7	8	---	IEEE1394	
CN8	15	---	Auto Take-Up Reel Unit *1	Option
CN9	20	---	PANEL ASSY.	FFC
CN10	3	---	P Rear Sensor	FFC
CN13	3	White	CR MOTOR ASSY.	With relay harness
CN14	2	White	PF MOTOR ASSY.	With relay harness
CN15	4	Black	Pressure Motor	With relay harness
CN16	4	White	Pump Motor	With relay harness
CN17	31	---	BOARD ASSY., SUB (CN1)	FFC
CN18	31	---	BOARD ASSY., SUB (CN2)	FFC
CN20	31	---	BOARD ASSY., SUB (CN4)	FFC
CN21	26	---	BOARD ASSY., SUB; B (CN1)	FFC
CN23	26	---	BOARD ASSY., SUB; C (CN1)	FFC
CN25	3	Black	Right VACUUM FAN ASSY.	With relay harness
CN26	3	Red	Middle VACUUM FAN ASSY.	With relay harness
CN27	3	Yellow	Left VACUUM FAN ASSY.	With relay harness
CN29	2	White	Cooling Fan	
CN30	2	White	Heatsink Cooling Fan	
CN31	3	White	Regulator Solenoid	With relay harness

Note "*1": Stylus Pro 7400/7800

☐ Power Supply Board

Table 7-2. Power Supply Board Connector List

CN.No.	Pins	Color	Connected to	Remarks
CN001	2	White	INLET ASSY.	
CN301	14	White	BOARD ASSY., MAIN (CN1)	

☐ C594 SUB Board (Relay Board 1)

Table 7-3. C594 SUB Board Connectors List

CN.No.	Pins	Color	Connected to	Remarks
CN1	31	---	BOARD ASSY., MAIN (CN17)	FFC
CN2	31	---	BOARD ASSY., MAIN (CN18)	FFC
CN4	31	---	BOARD ASSY., MAIN (CN20)	FFC
CN5	31	---	Print Head	FFC
CN6	31	---	Print Head	FFC
CN7	2	White	Cutter Solenoid Assy.	
CN8	4	---	IM (Ink Mark) Sensor	FFC
CN9	5	---	CR Encoder Sensor	FFC
CN10	4	Red	P Edge Sensor	
CN12	2	Black	PG HP Sensor	
CN13	2	White	CR HP Sensor	

☐ C594 SUB-B Board (Relay Board 2)

Table 7-4. C594 SUB-B Board Connectors List

CN.No.	Pins	Color	Connected to		Remarks
CN1	26	---	BOARD ASSY., MAIN (CN21)		FFC
CN5	2	Blue	I/C LEVER SENSOR R		
CN6	7	---	CSIC RELAY (R1) BOARD	Photo black (matte black)*1	FFC
				Cyan*2	FFC
CN7	7	---	CSIC RELAY (R2) BOARD	Cyan*1	FFC
				Cyan*2	FFC
CN8	7	---	CSIC RELAY (R3) BOARD	Magenta*1	FFC
				Yellow*2	FFC
CN9	7	---	CSIC RELAY (R4) BOARD	Yellow*1	FFC
				Yellow*2	FFC
CN10	7	---	Maintenance Tank		FFC
CN12	3	Red	P Thick1 Sensor		
CN13	3	Yellow	P Thick2 Sensor		
CN20	3	Black	Pump Phase Sensor		

Note "*1": Stylus Pro 7800/9800
"*2": Stylus Pro 7400/9400

☐ C594 SUB-C Board (Relay Board 3)

Table 7-5. C594 SUB-C Board Connectors List

CN.No.	Pins	Color	Connected to		Remarks
CN1	26	---	BOARD ASSY., MAIN (CN23)		FFC
CN5	2	Blue	I/C LEVER SENSOR L		
CN6	7	---	CSIC RELAY (L1) BOARD	Light light black*1	FFC
				Matte black*2	FFC
CN7	7	---	CSIC RELAY (L2) BOARD	Light magenta*1	FFC
				Matte black*2	FFC
CN8	7	---	CSIC RELAY (L3) BOARD	Light cyan*1	FFC
				Magenta*2	FFC
CN9	7	---	CSIC RELAY (L4) BOARD	Light black*1	FFC
				Magenta*2	FFC
CN10	4	White	PF Encoder Sensor		
CN15	3	Red	Pressure Sensor		
CN16	2	Black	Front Sensor		
CN17	7	---	Maintenance Tank*3		FFC

Note "*1": Stylus Pro 7800/9800
"*2": Stylus Pro 7400/9400
"*3": Stylus Pro 9400/9800 only

☐ C594 Panel Board

Table 7-6. C594 Panel Board Connectors List

CN.No.	Pins	Color	Connected to	Remarks
CN1	20	---	BOARD ASSY., MAIN (CN9)	FFC
CN2	19	---	LCD	FFC
CN3	4	---	LED	FFC

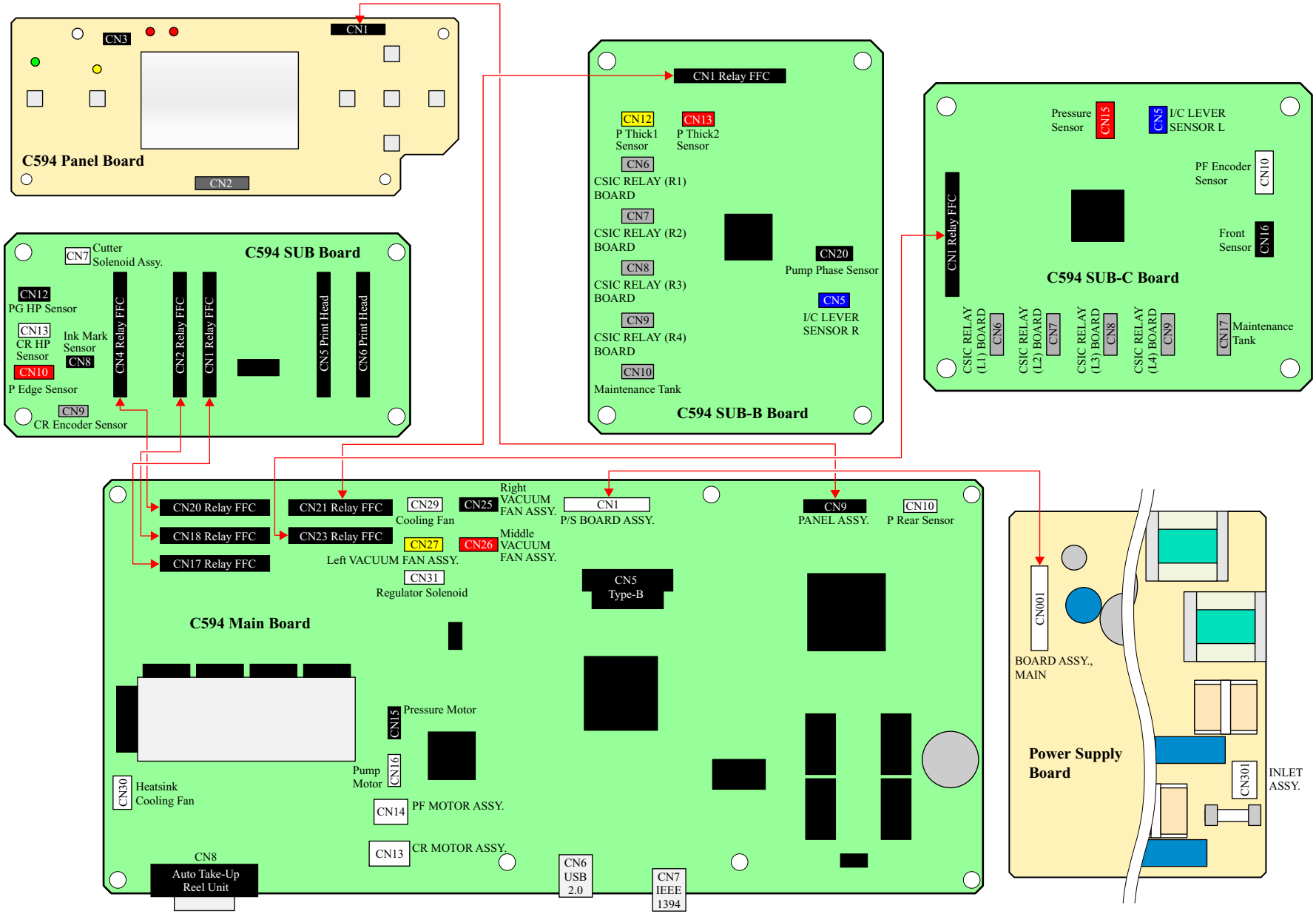

Figure 7-1. Stylus Pro 7400/7800/9400/9800 Connectors

7.2 Circuit Diagrams

The circuit diagrams of the following circuit boards are shown on the following pages:

- C594 MAIN Board
  - C594 MAIN Board (1)
  - C594 MAIN Board (2)
  - C594 MAIN Board (3)
  - C594 MAIN Board (4)
- C594 SUB Board
- C594 SUB-B Board
- C594 SUB-C Board
- C594 PNL Board

QUALITY DOCUMENT

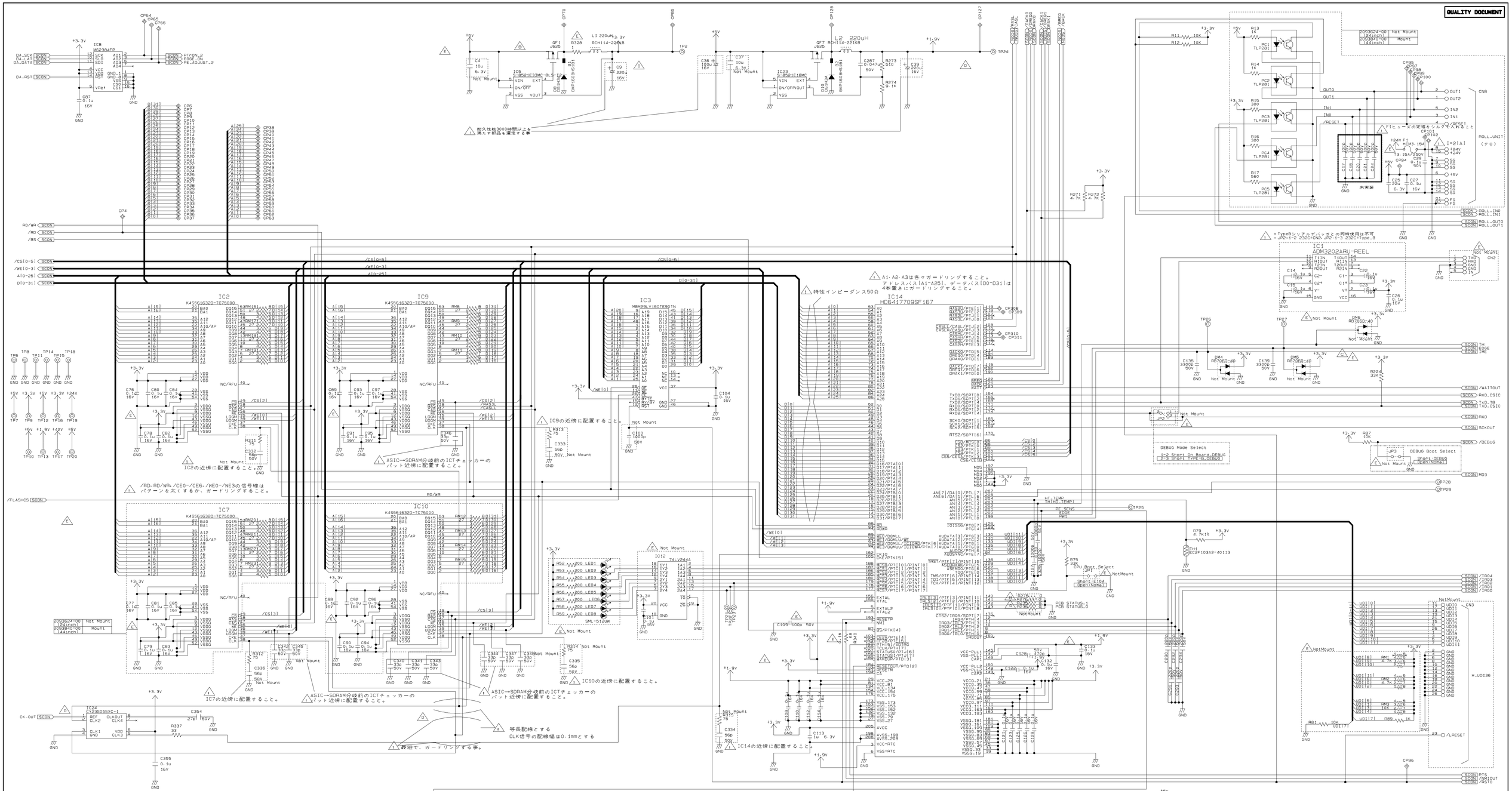

Model: PX-7500/7500S/9500/9500S
Board: C594 Main
Sheet: 1 of 4
Revison: G

EPSON

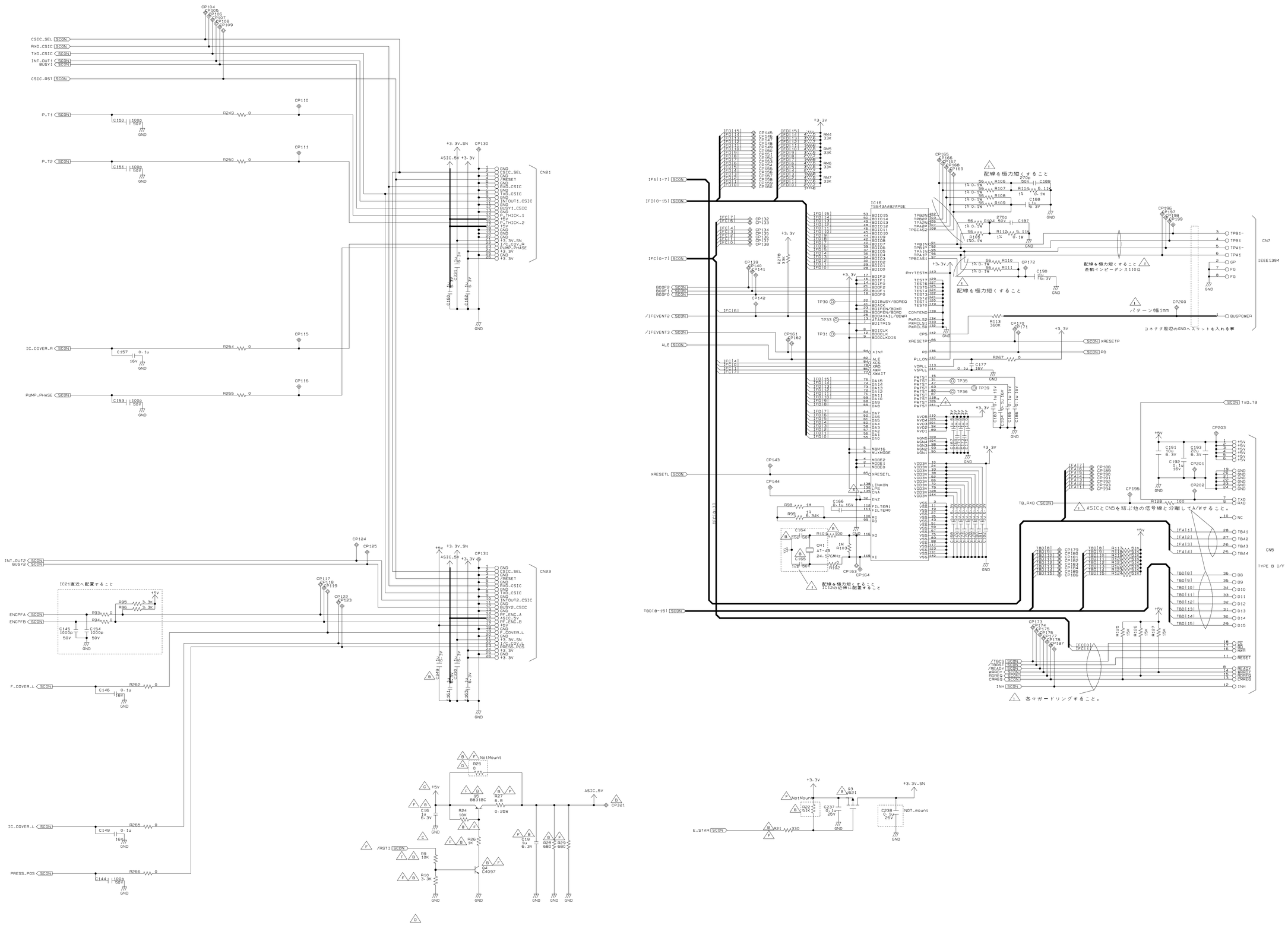

Model: PX-7500/7500S/9500/9500S
Board: C594 Main
Sheet: 2 of 4
Revison: F

QUALITY DOCUMENT

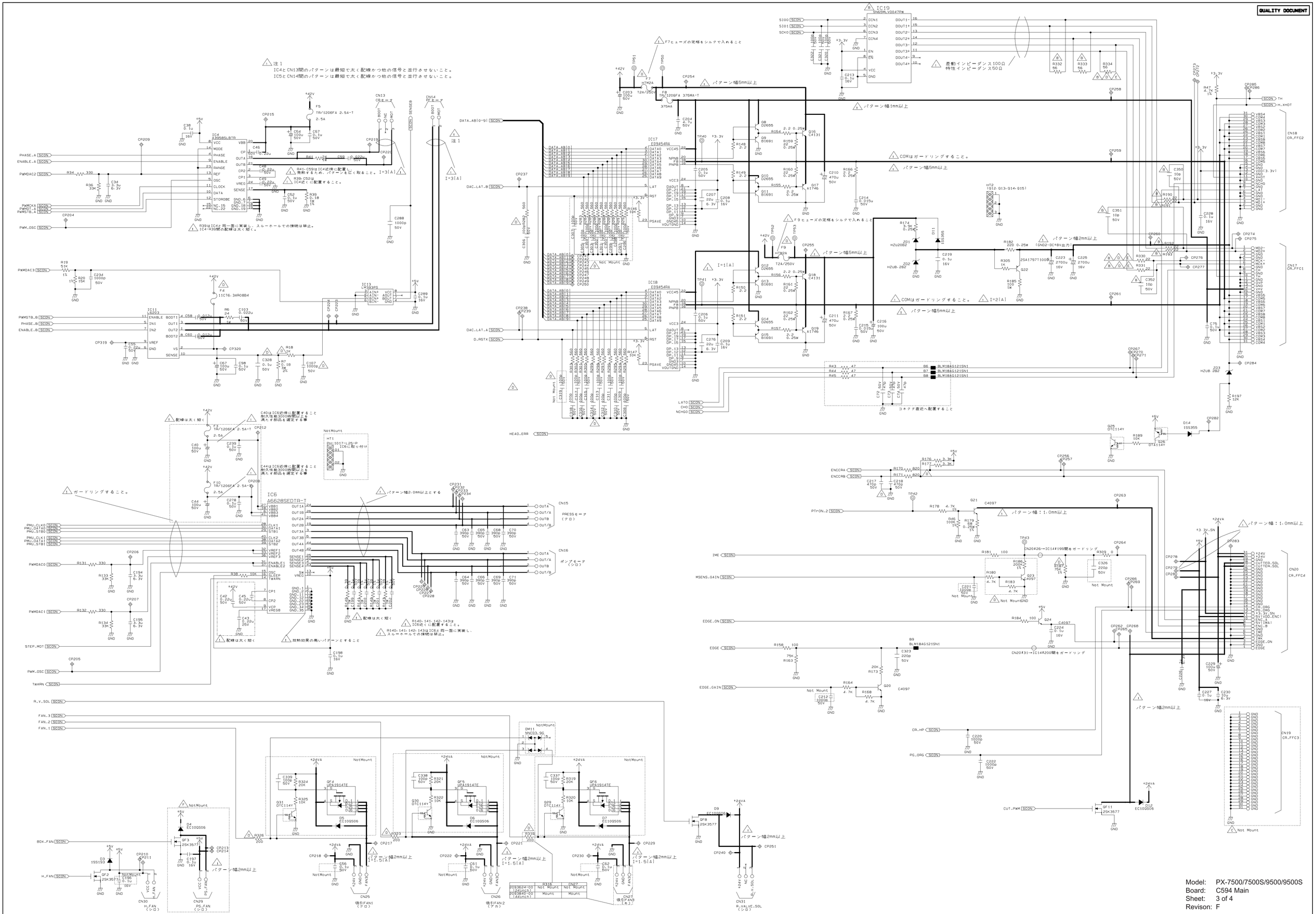

EPSON

QUALITY DOCUMENT

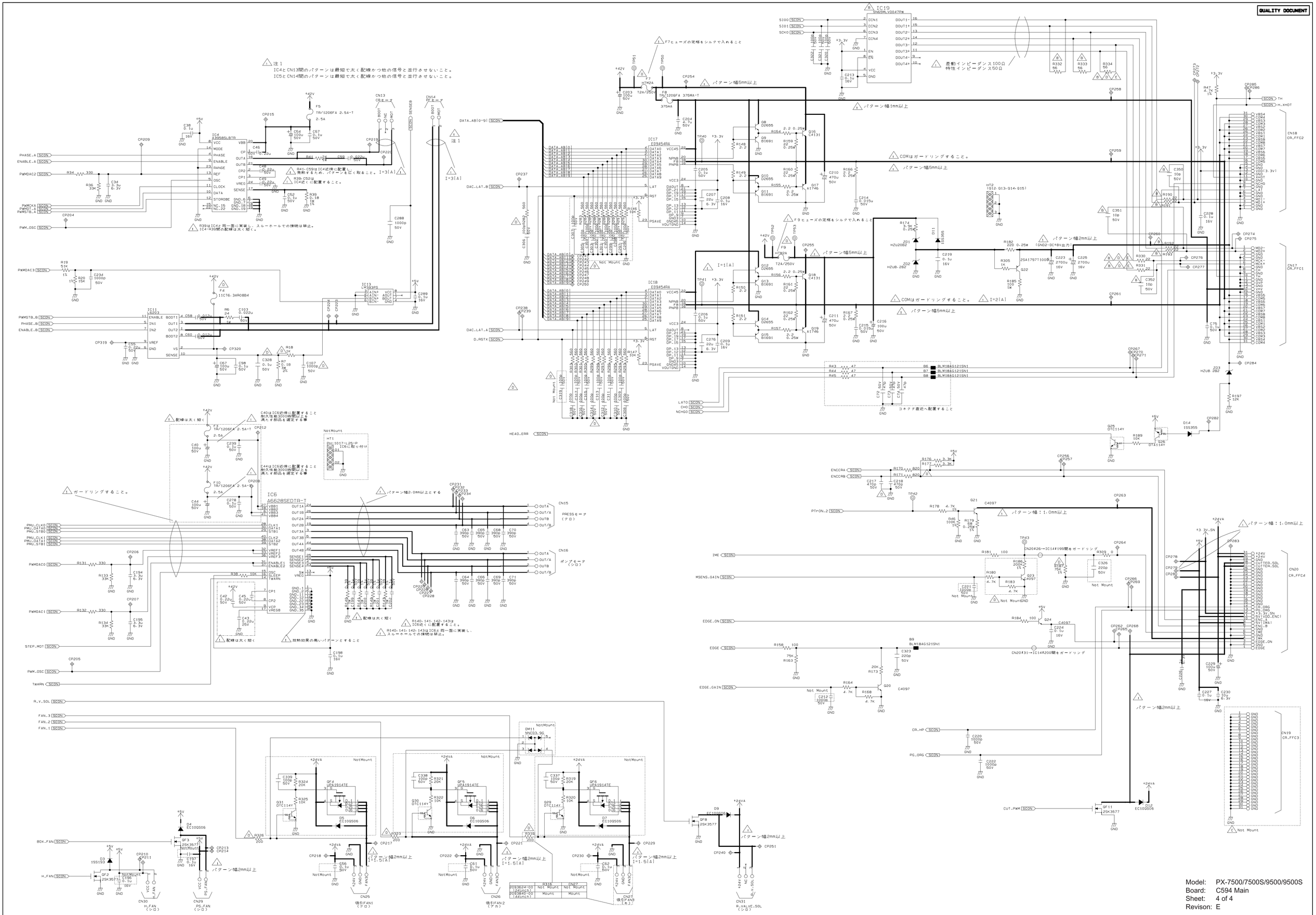

EPSON

QUALITY DOCUMENT

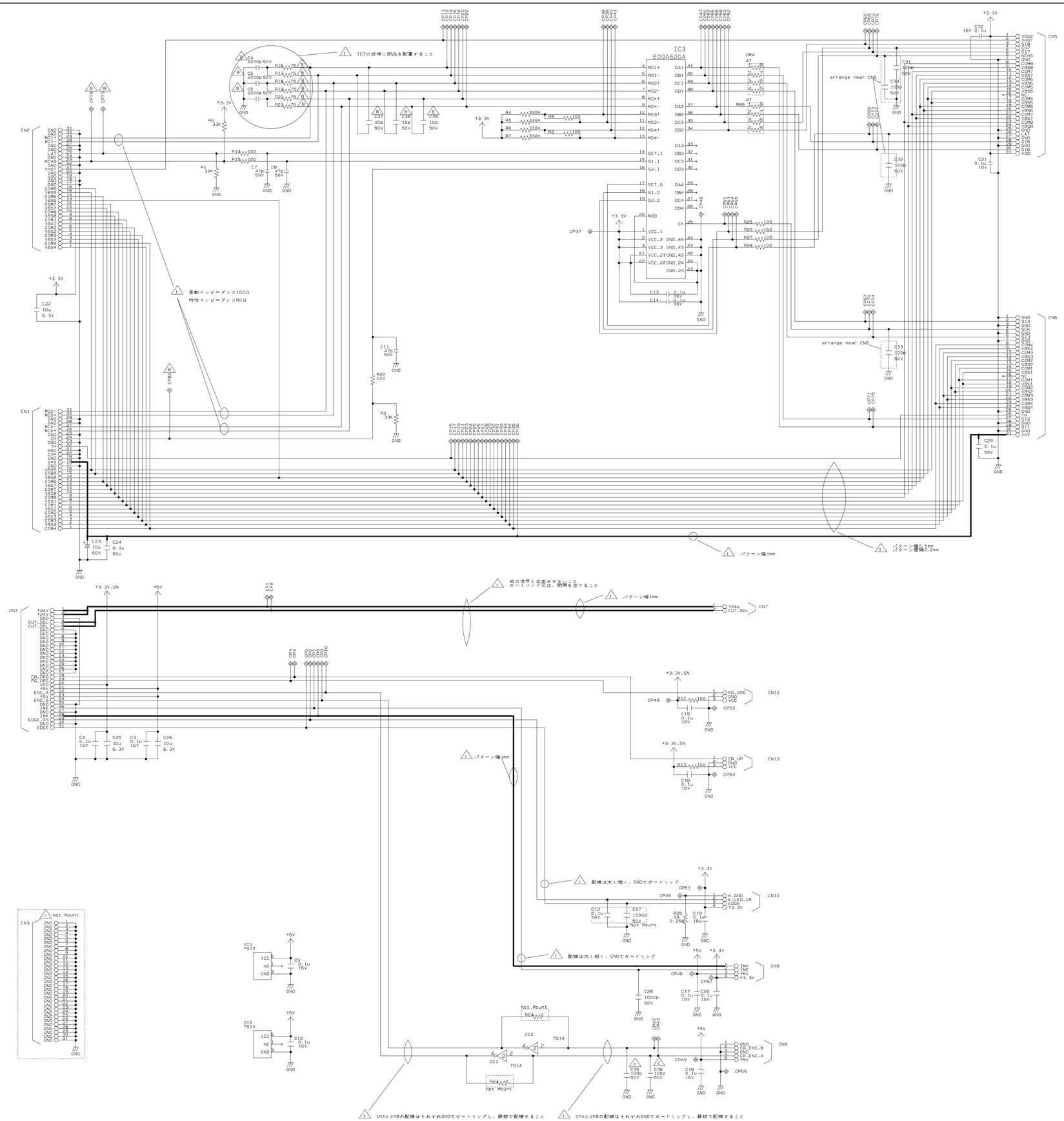

Model: PX-7500/7500S/9500/9500S
Board: C594 SUB
Sheet: 1
Revison: C

EPSON

QUALITY DOCUMENT

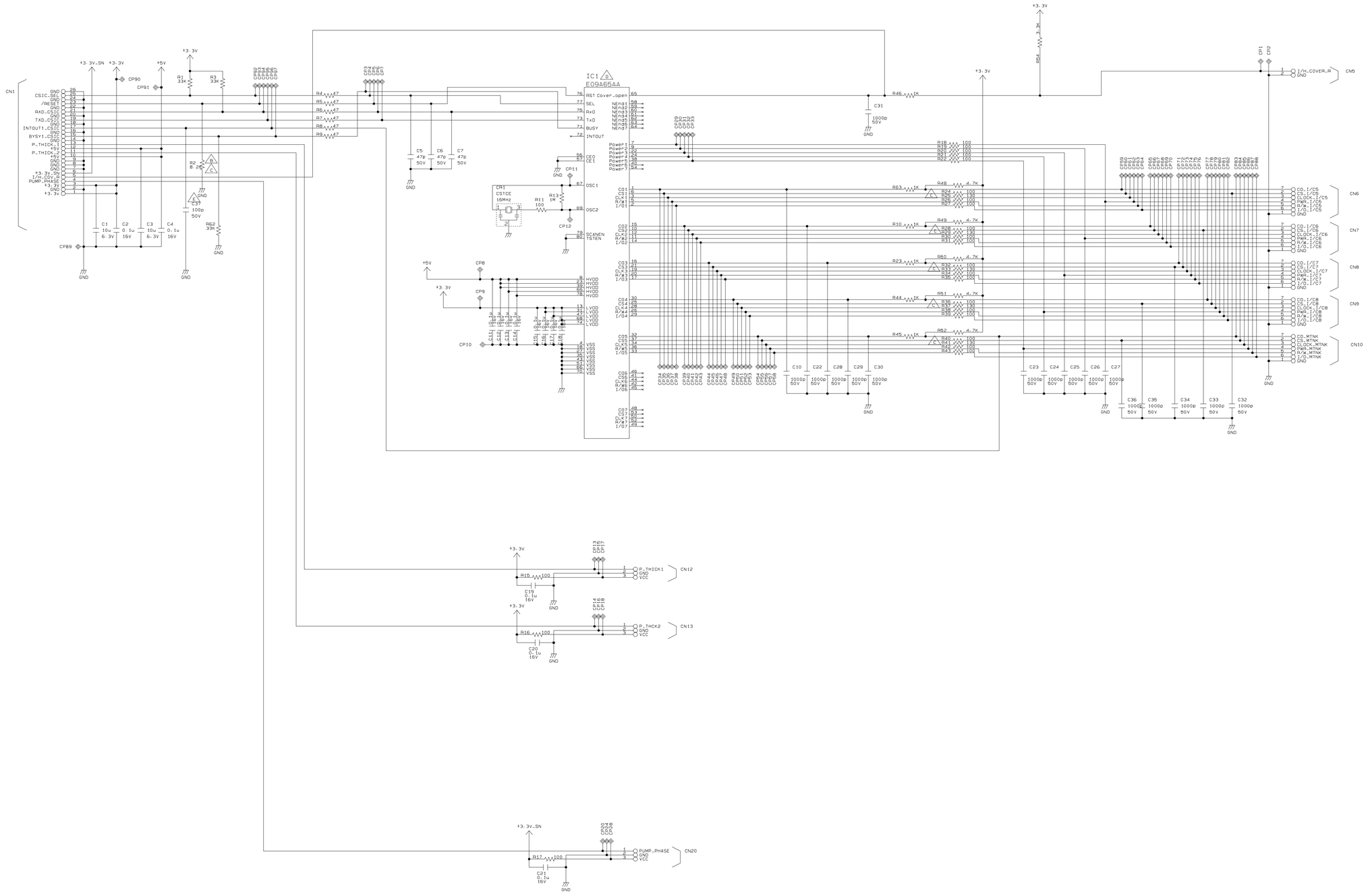

Model: PX-7500/7500S/9500/9500S
Board: C594 SUB-B
Sheet: 1
Revison: E

EPSON

QUALITY DOCUMENT

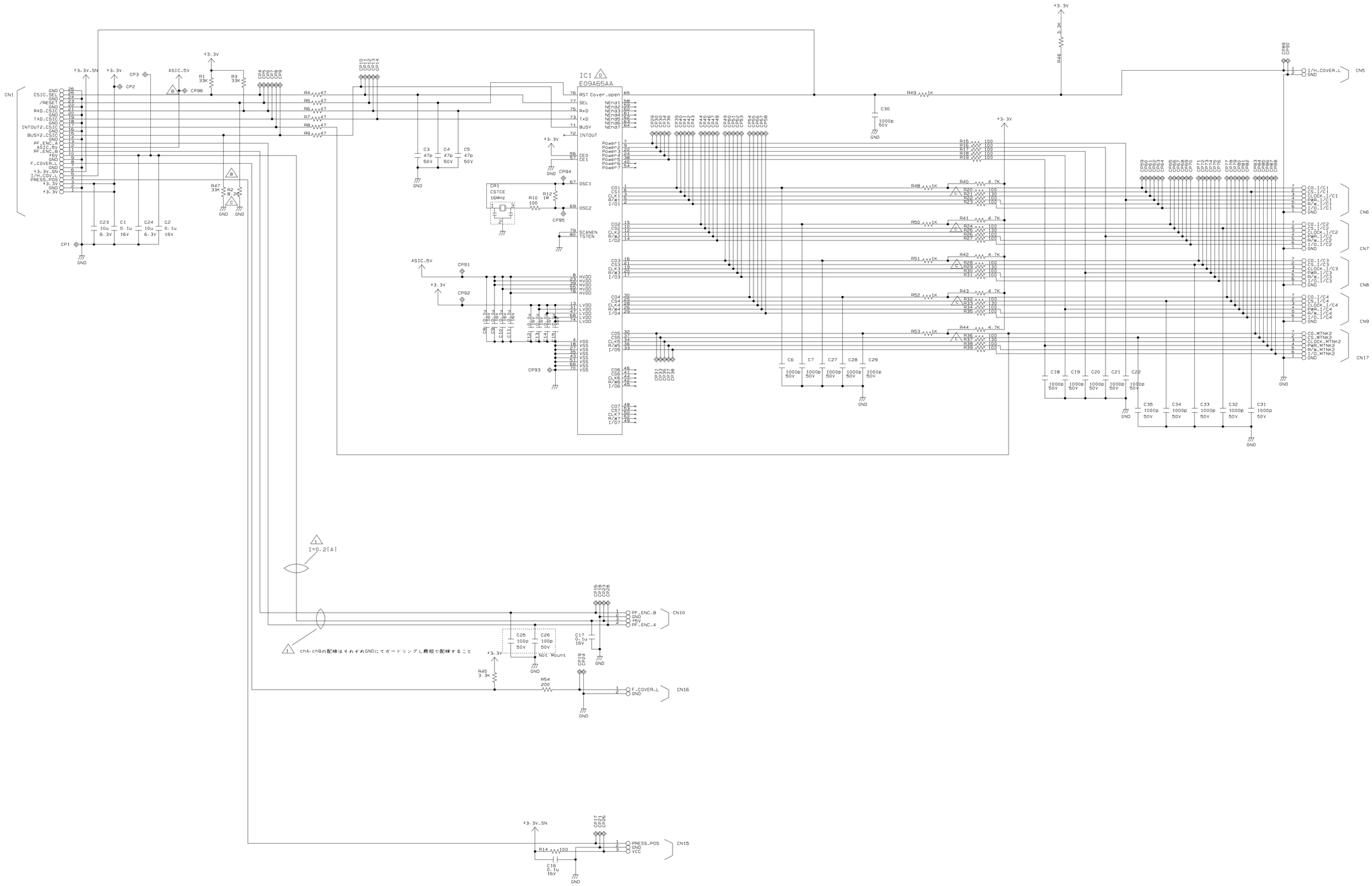

Model: PX-7500/7500S/9500/9500S
Board: C594 SUB-C
Sheet: 1
Revison: D

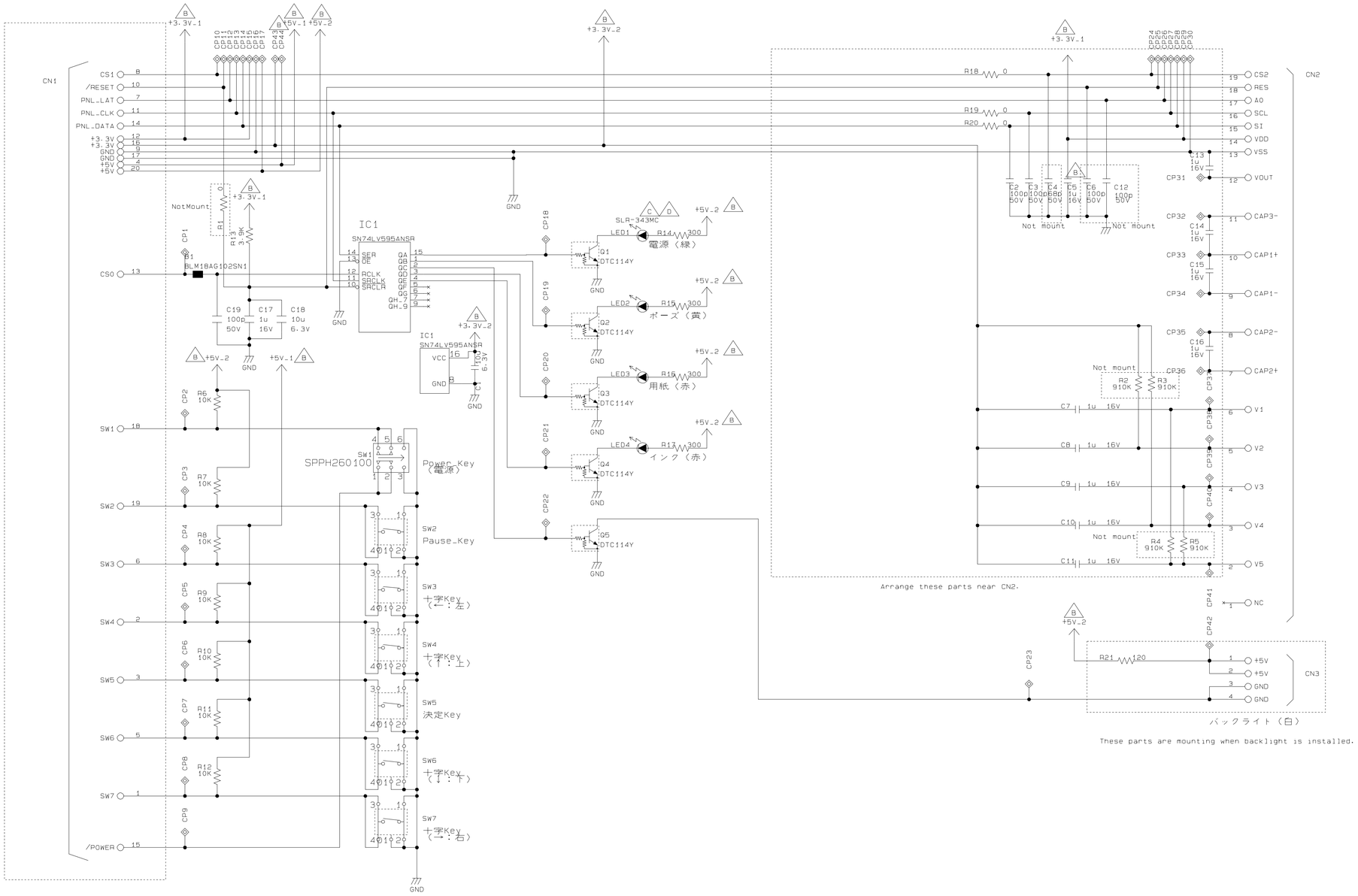

Model: PX-7500/7500S/9500/9500S
Board: C594 PNL
Sheet: 1
Revison: D

7.3 Exploded Diagrams

- Stylus Pro 7400/7800 (Total: 14 pages)
- Stylus Pro 9400/9800 (Total: 14 pages)

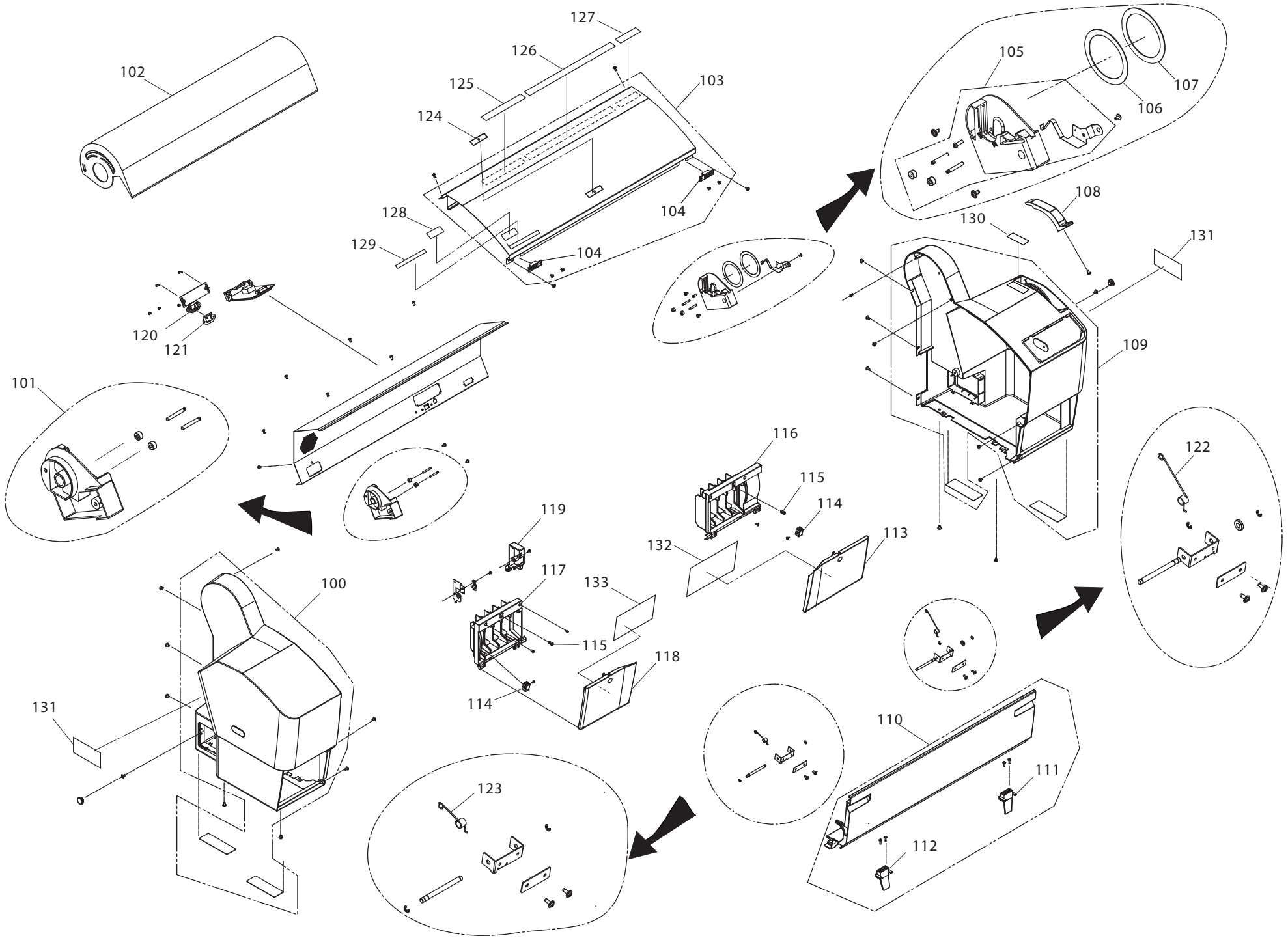

PX-7500,7500S / EPSON STYLUS PRO 7400,7800 No.01 Rev.01 C594-CASE-011

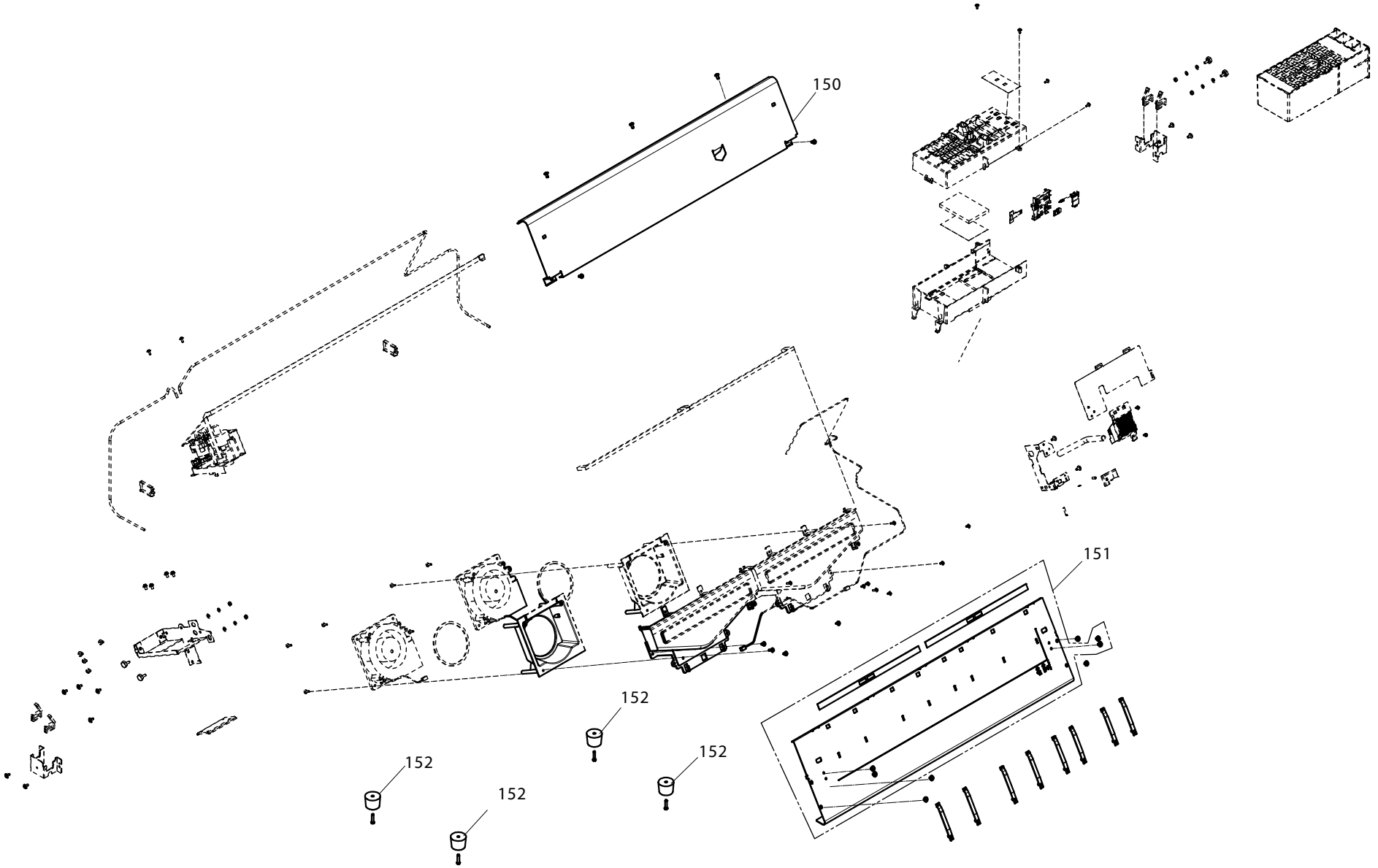

PX-7500,7500S / EPSON STYLUS PRO 7400,7800 No.02 Rev.01 C594-CASE-021

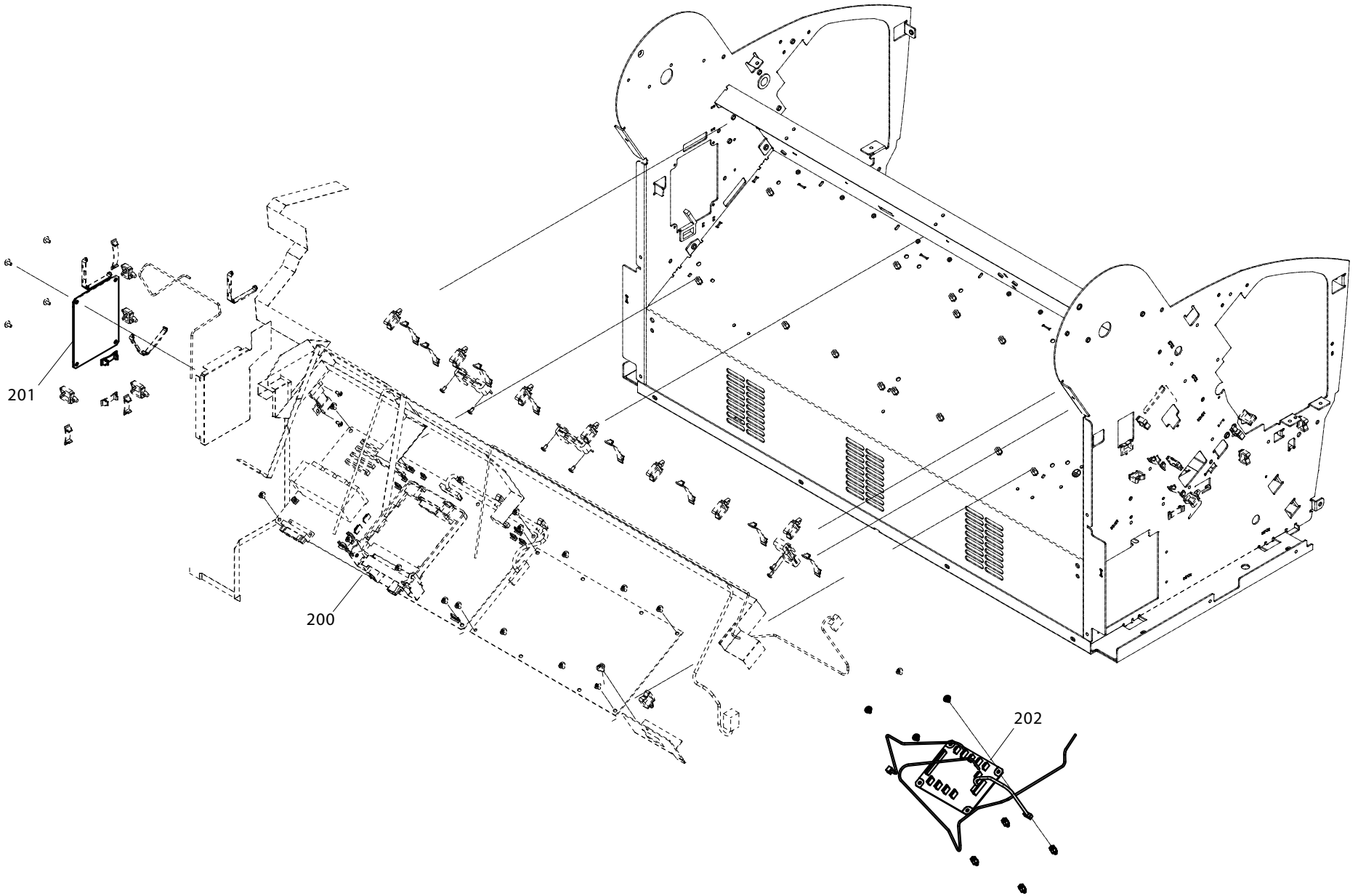
201
200
202

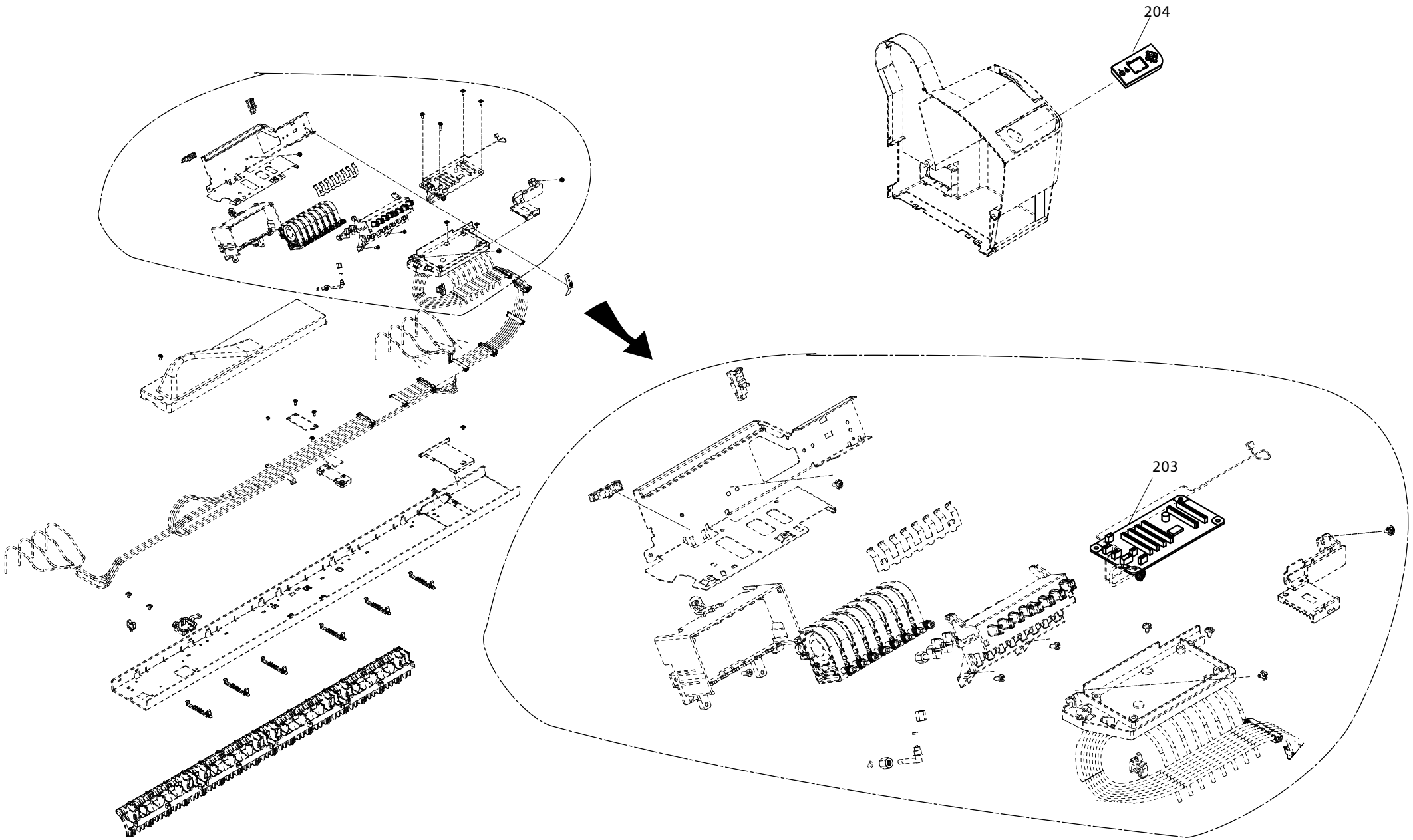

PX-7500,7500S / EPSON STYLUS PRO 7400,7800 No.04 Rev.01 C594-ELEC-021

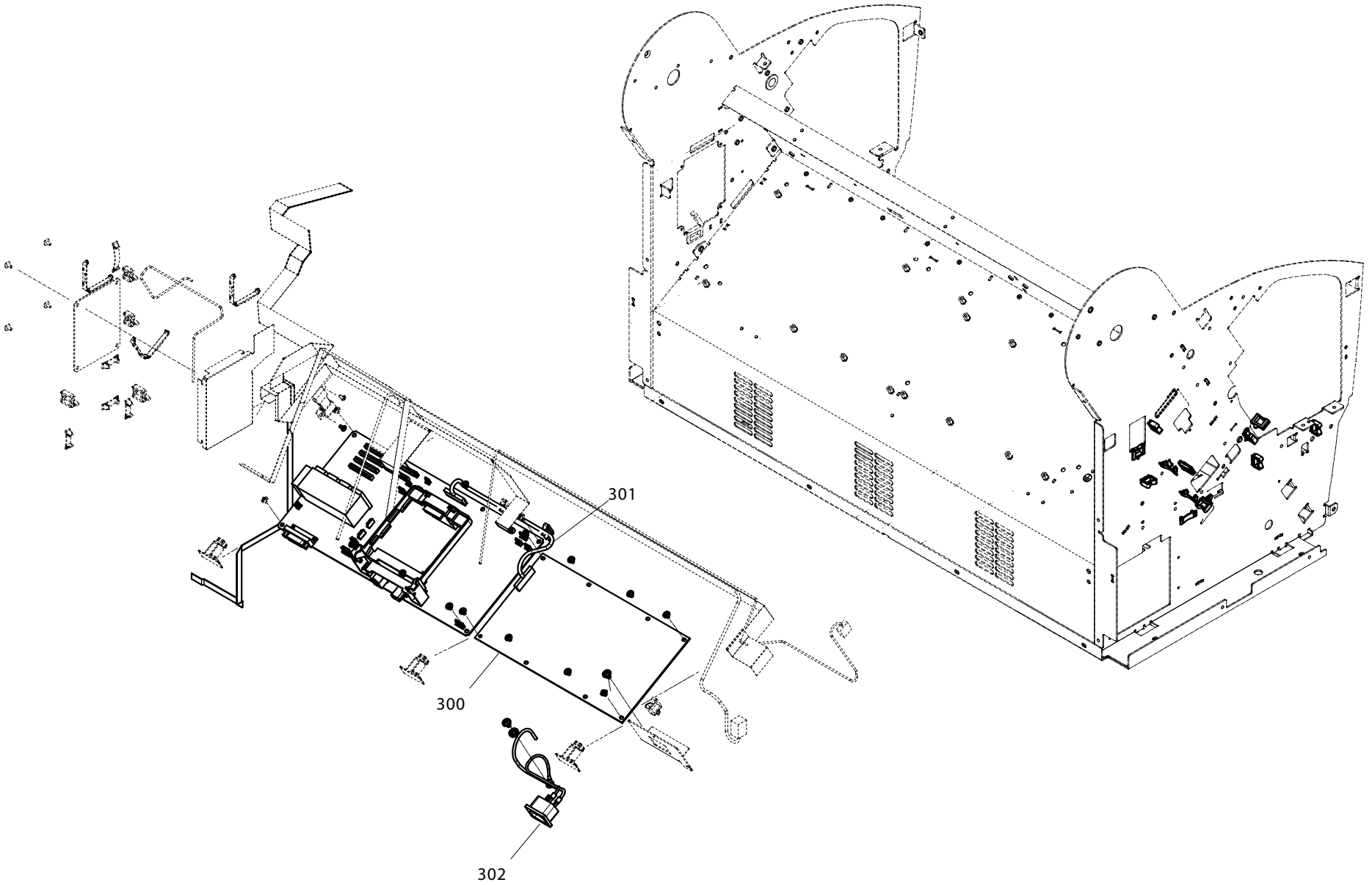
301
300
302

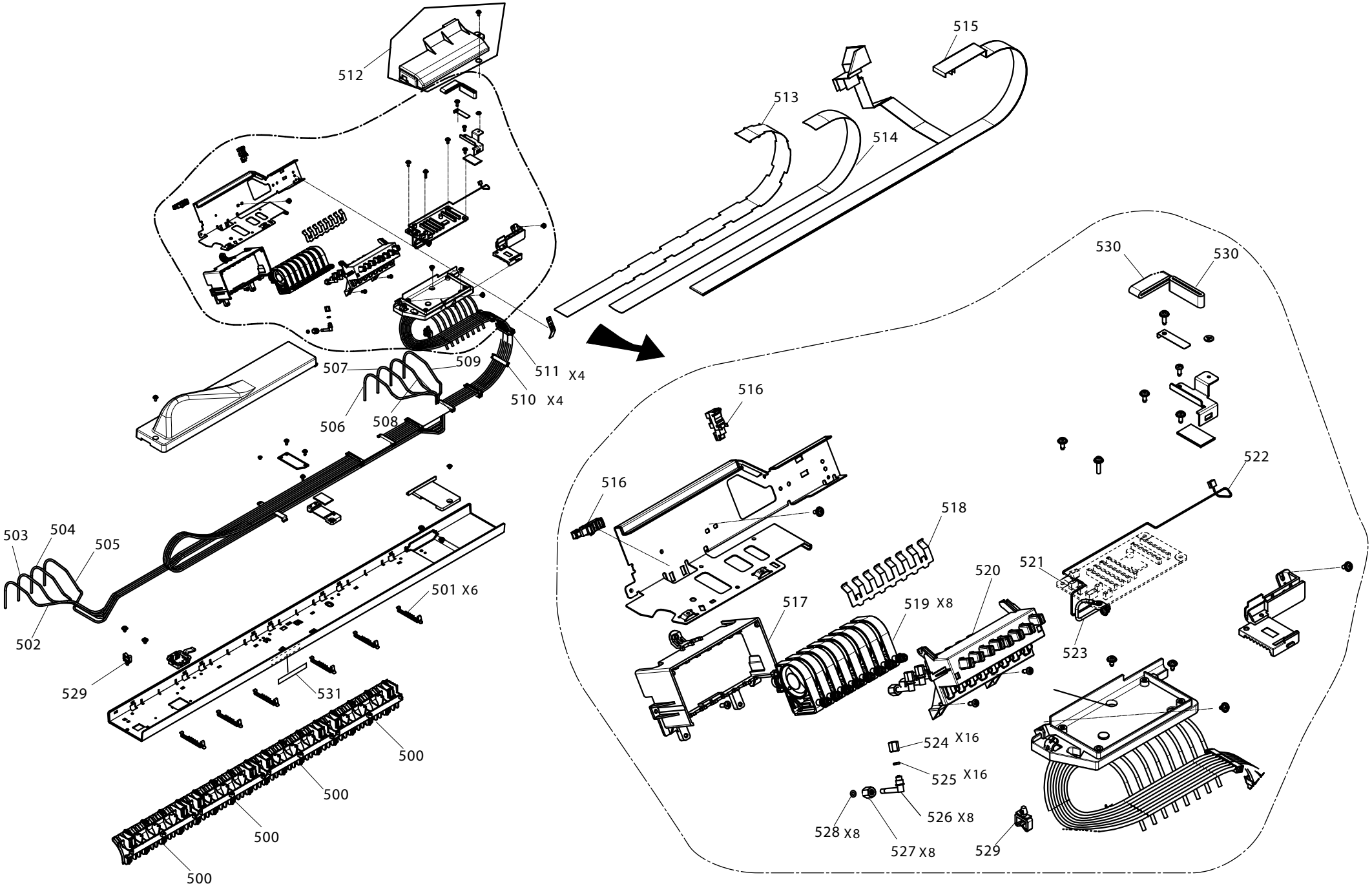

PX-7500,7500S / EPSON STYLUS PRO 7400,7800 No.06 Rev.01 C594-MECH-011

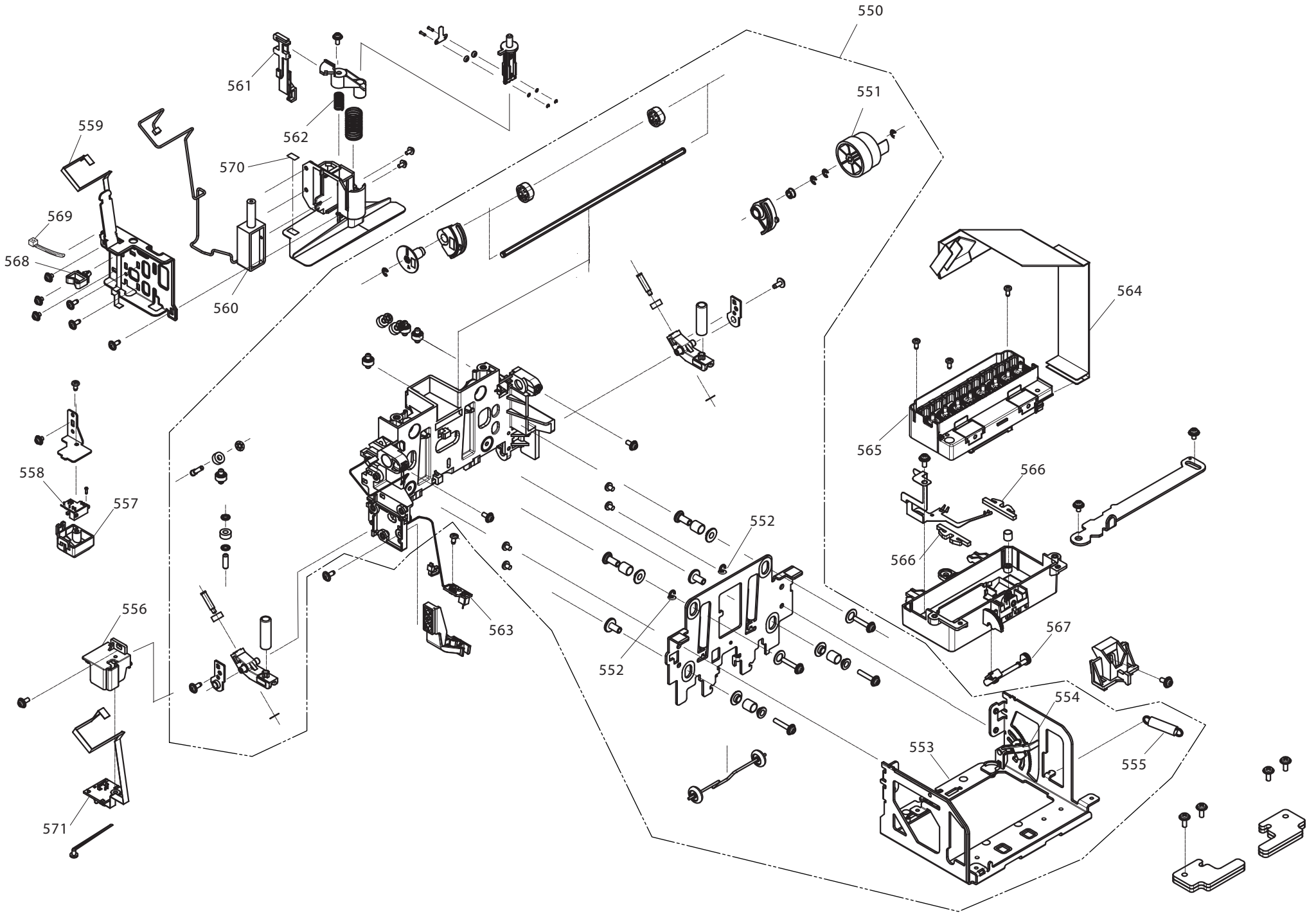

PX-7500,7500S / EPSON STYLUS PRO 7400,7800 No.07 Rev.01 C594-MECH-021

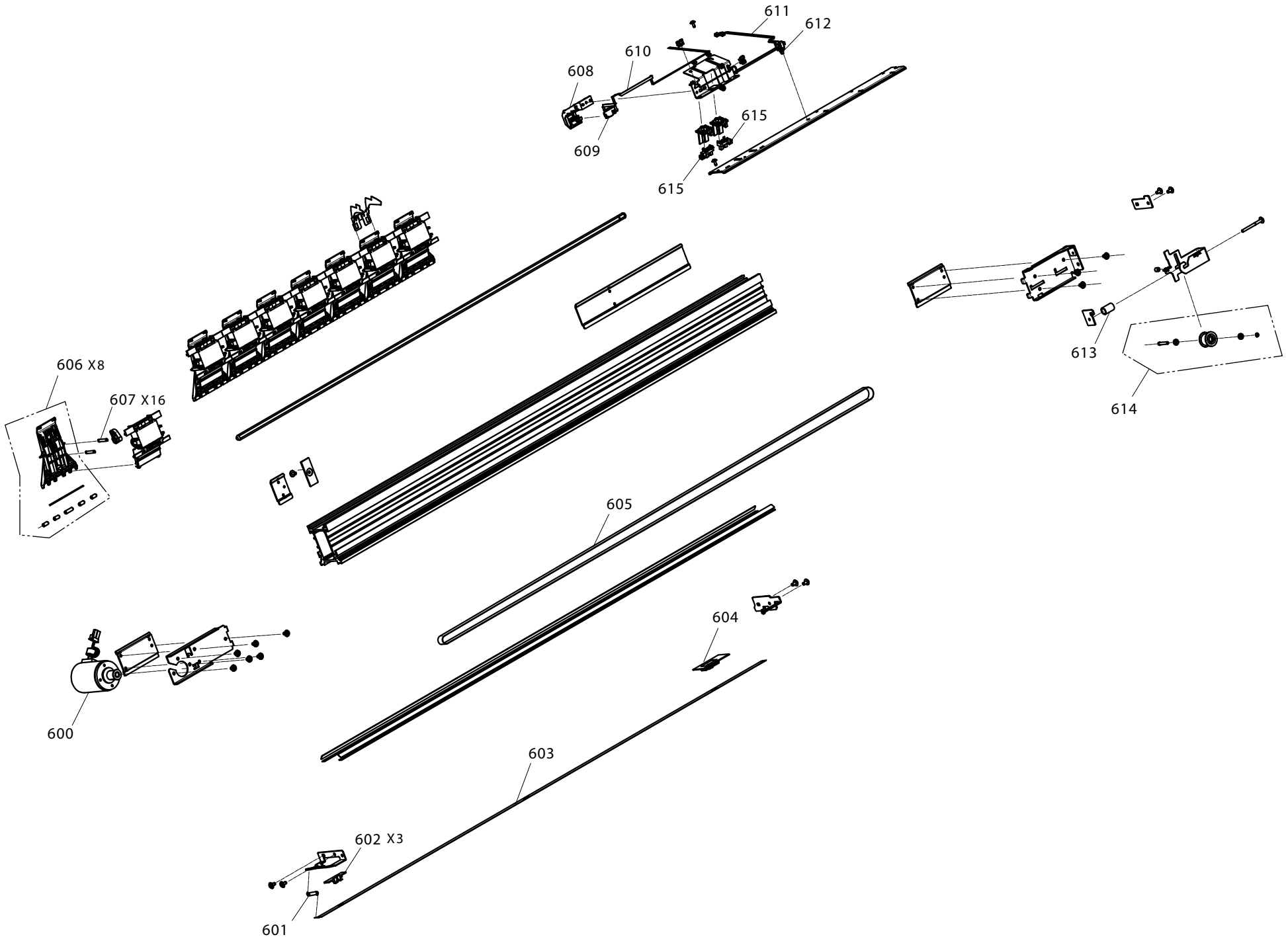

PX-7500,7500S / EPSON STYLUS PRO 7400,7800 No.08 Rev.01 C594-MECH-031

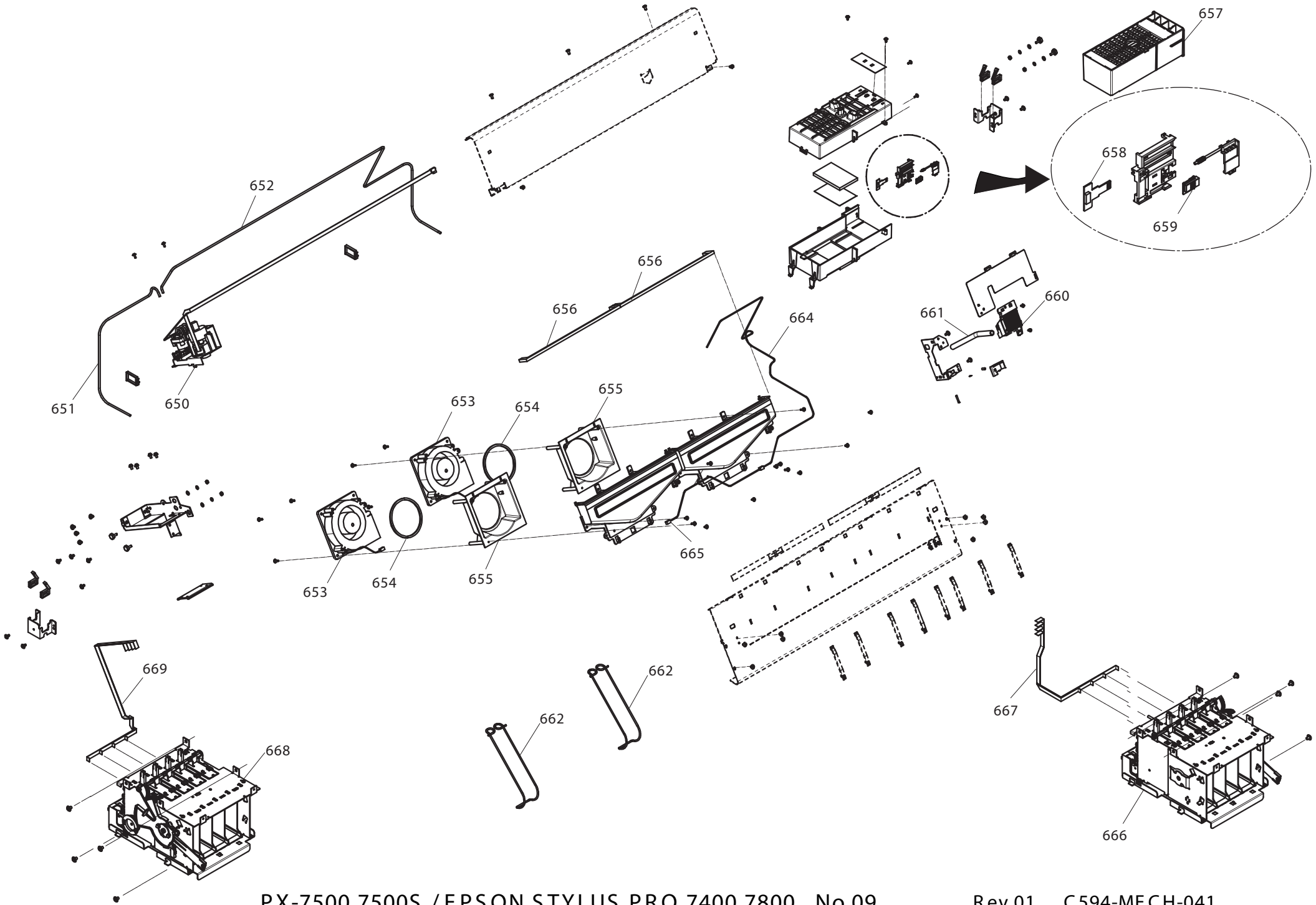

PX-7500,7500S / EPSON STYLUS PRO 7400,7800 No.09 Rev.01 C594-MECH-041

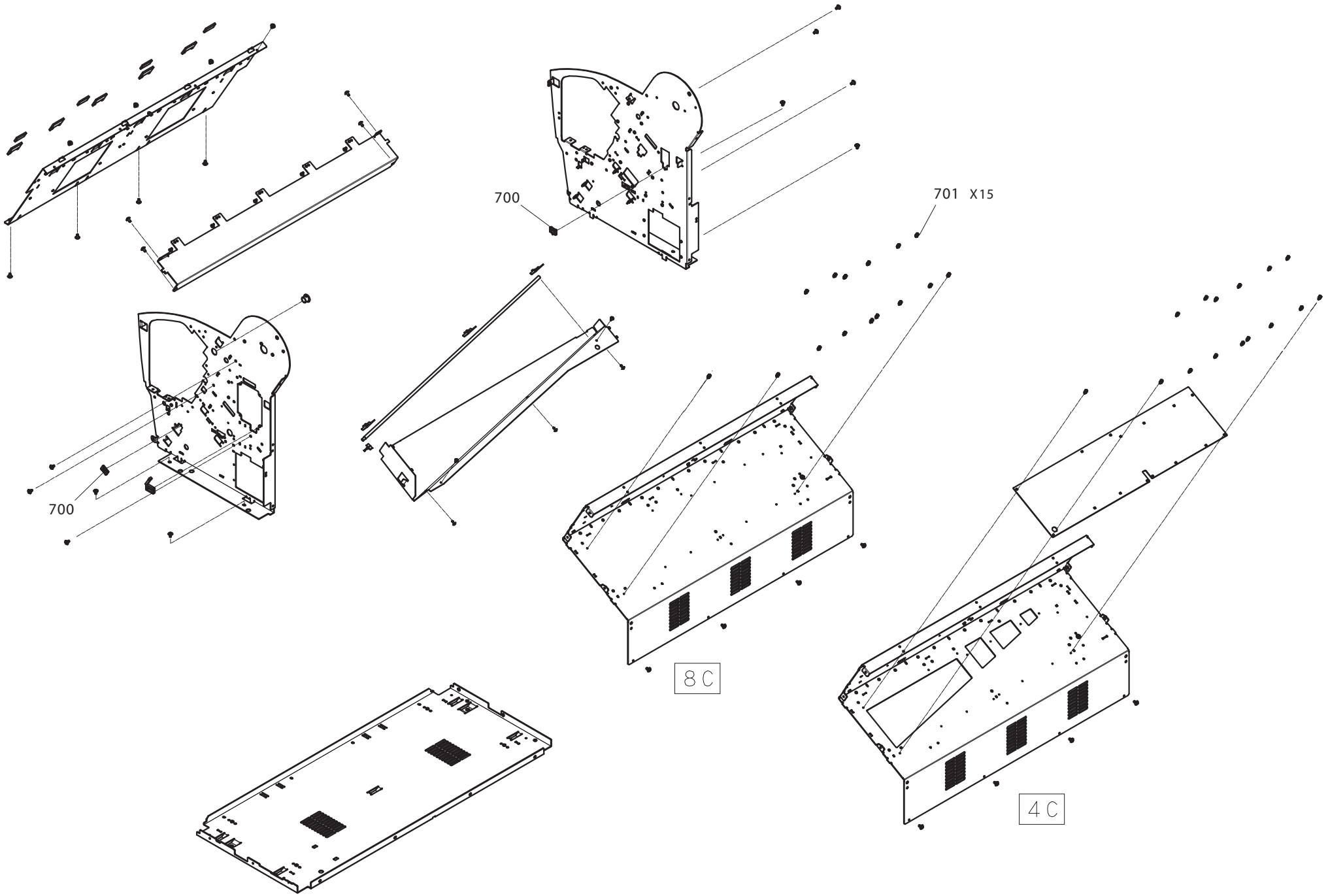

PX-7500,7500S / EPSON STYLUS PRO 7400,7800 No.10

Rev.01 C594-MECH-051

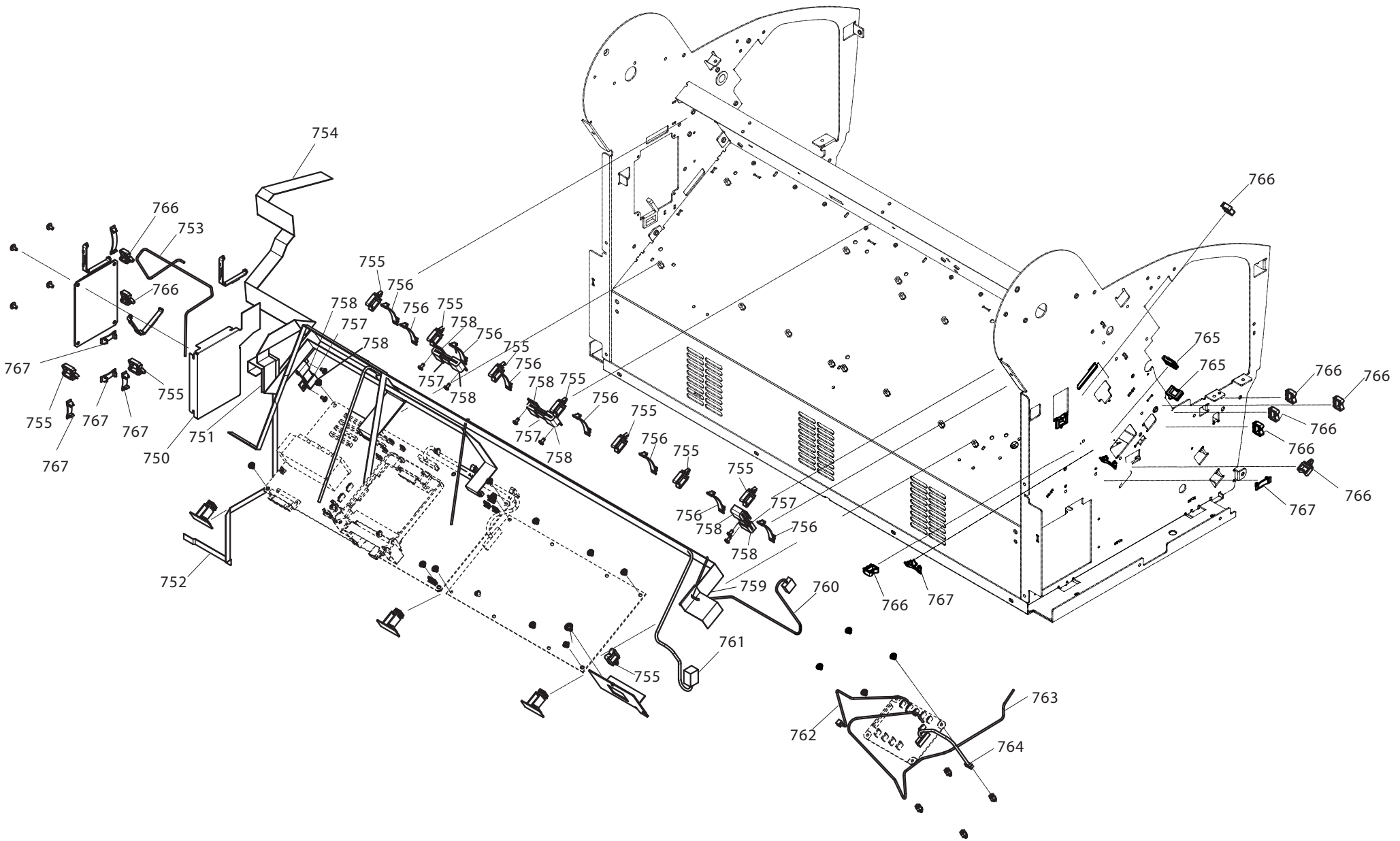
754
766
753
766
767
755
767
755
767
767
750
751
752
755
756
756
755
758
757
758
757
758
756
755
756
758
755
757
758
756
755
756
755
756
755
757
756
758
758
759
760
761
755
762
763
764
766
767
765
765
766
766
766
766
766
767

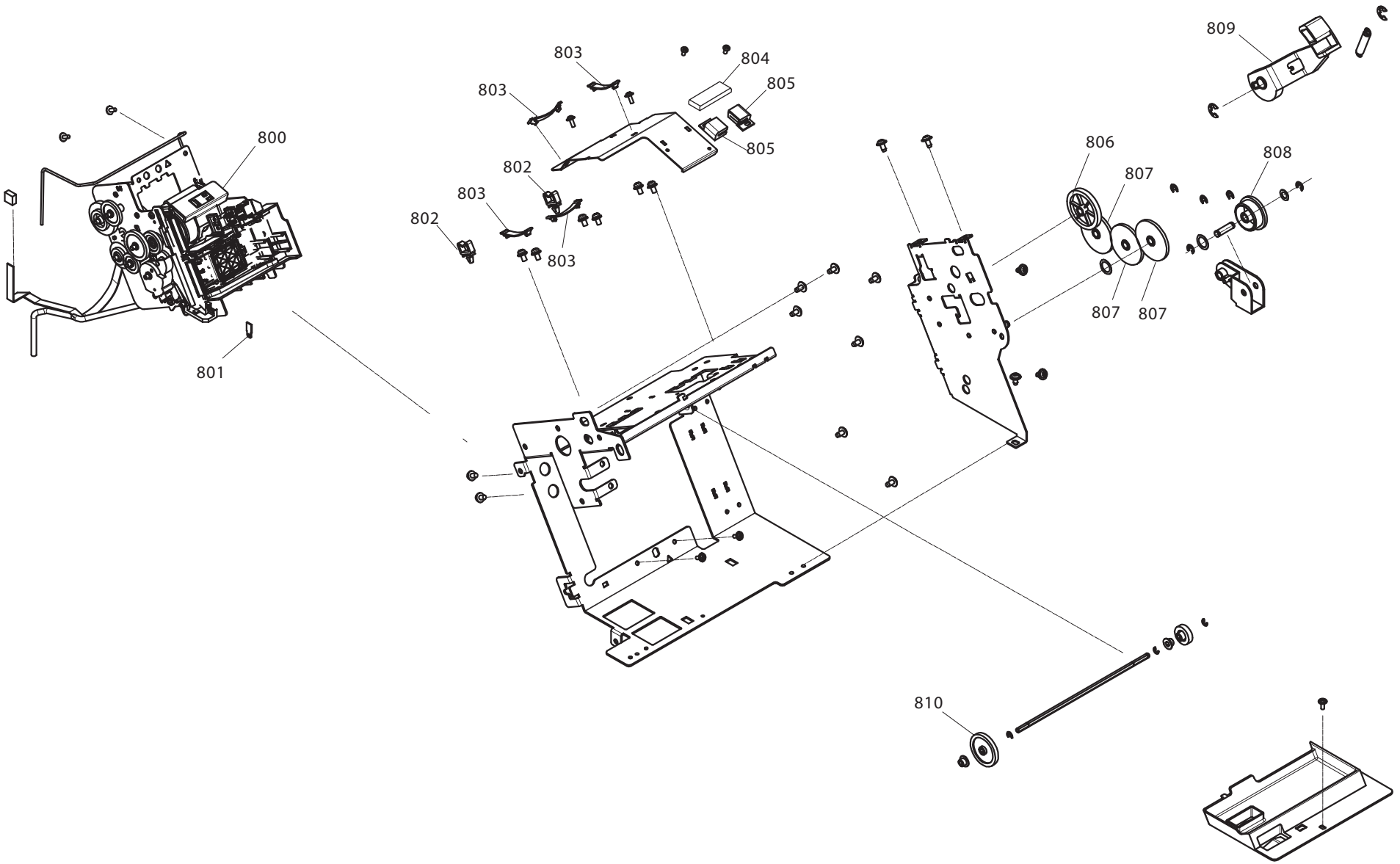
800
801
802
802
803
803
803
803
804
805
805
806
807
807
807
808
809
810

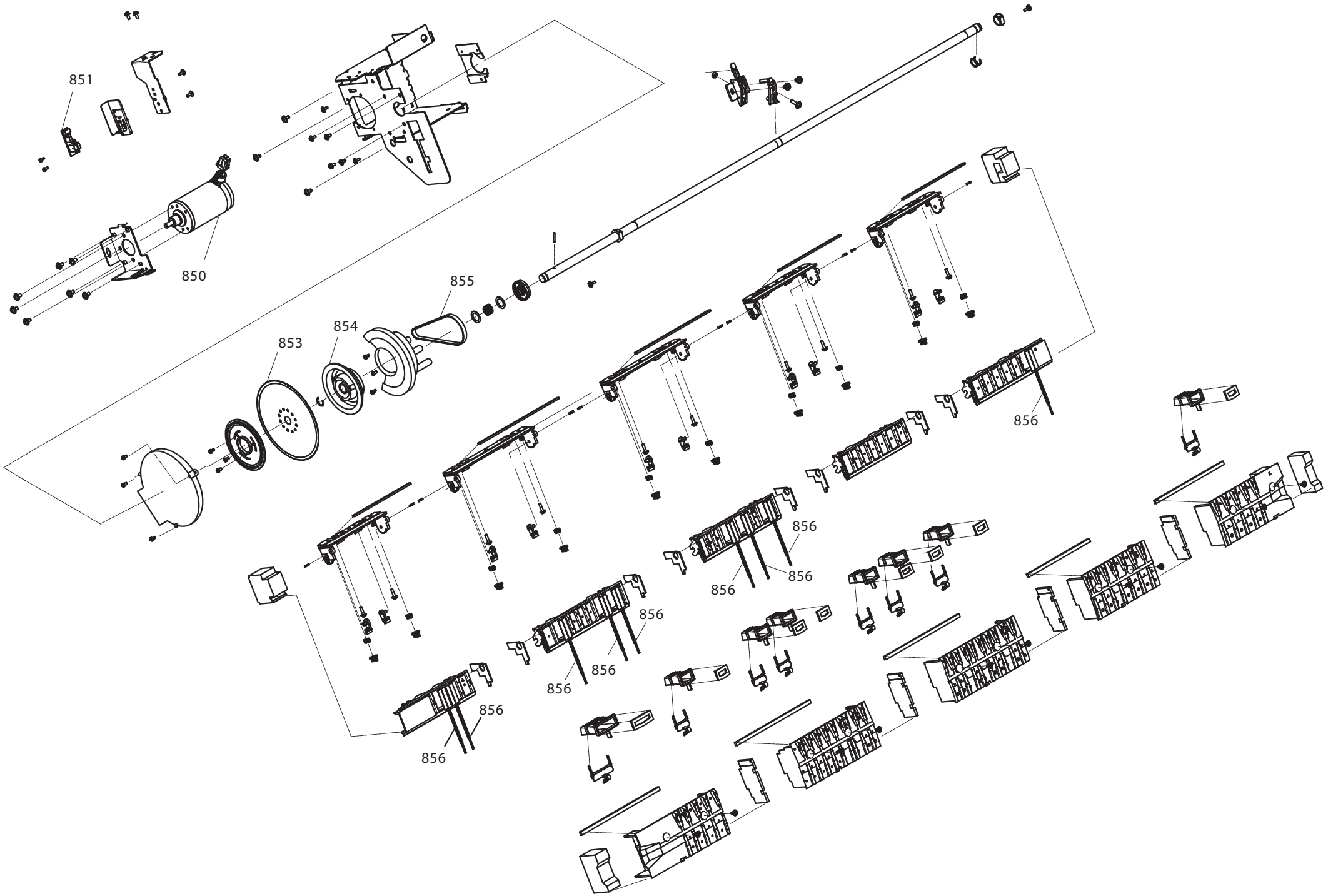

PX-7500,7500S / EPSON STYLUS PRO 7400,7800 No.13 Rev.01 C594-MECH-081

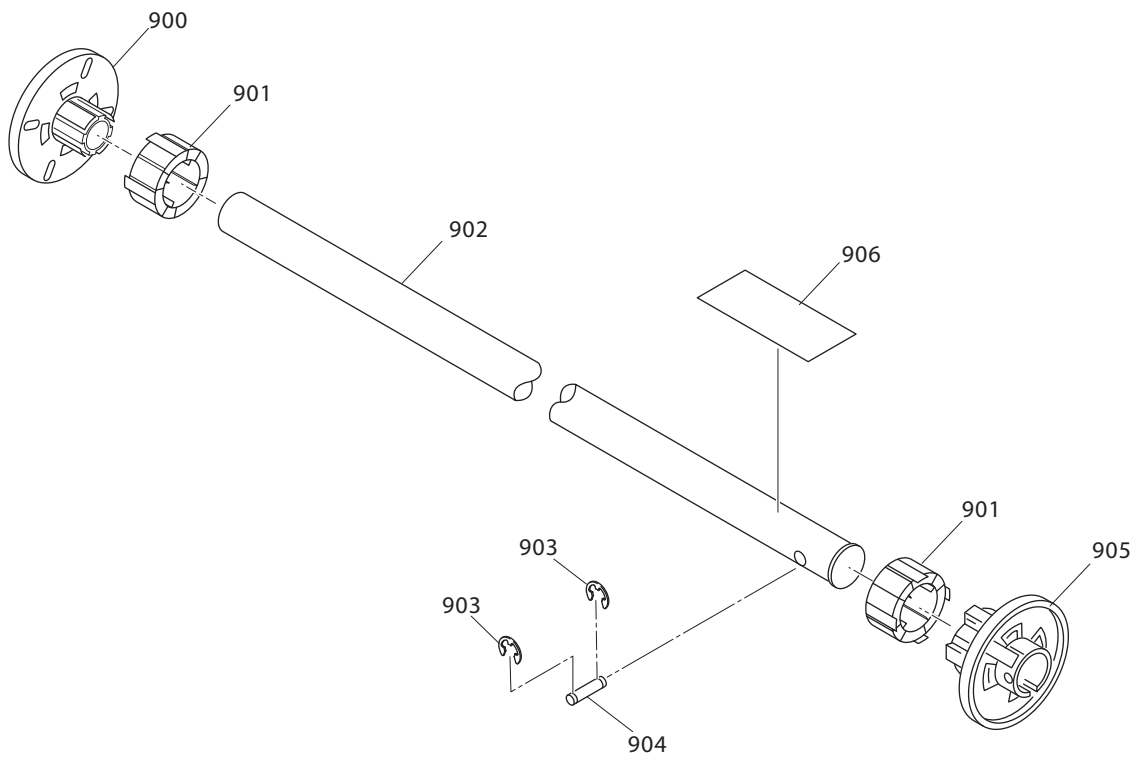
900
901
902
906
901
905
903
903
904

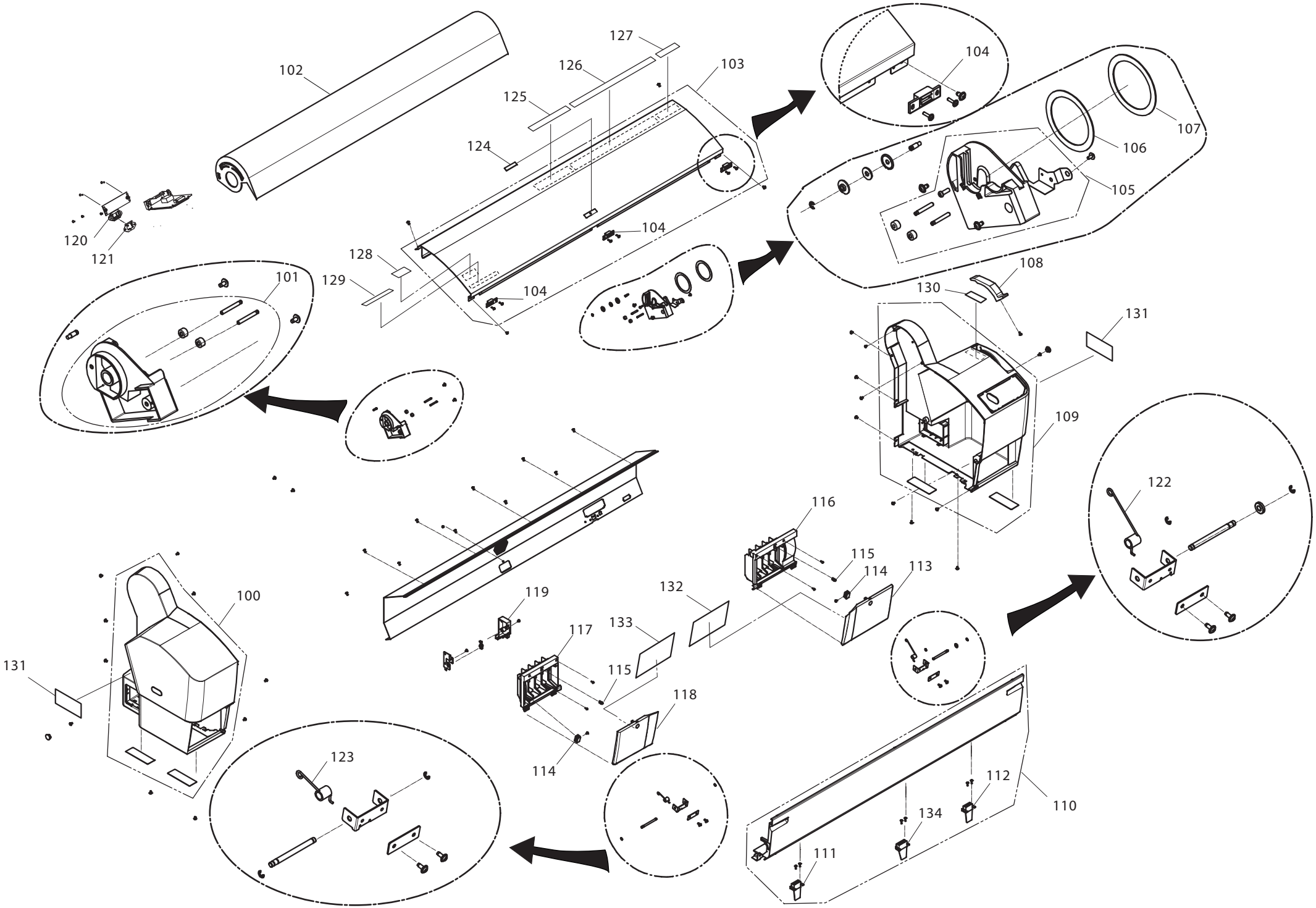

PX-9500,9500S / EPSON STYLUS PRO 9400,9800 No.01 Rev.01 C595-CASE-011

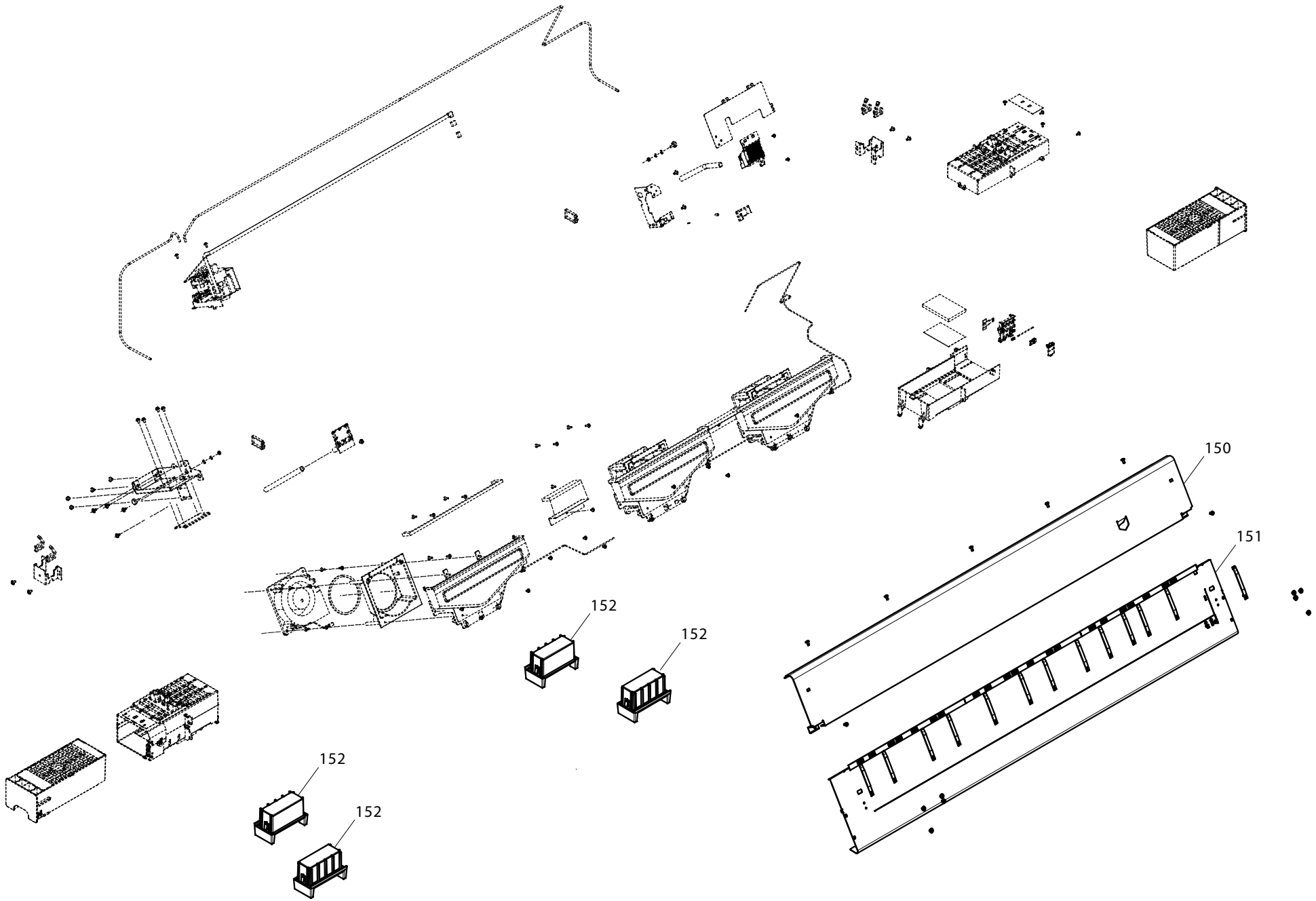

PX-9500,9500S / EPSON STYLUS PRO 9400,9800 No.02 Rev.01 C595-CASE-021

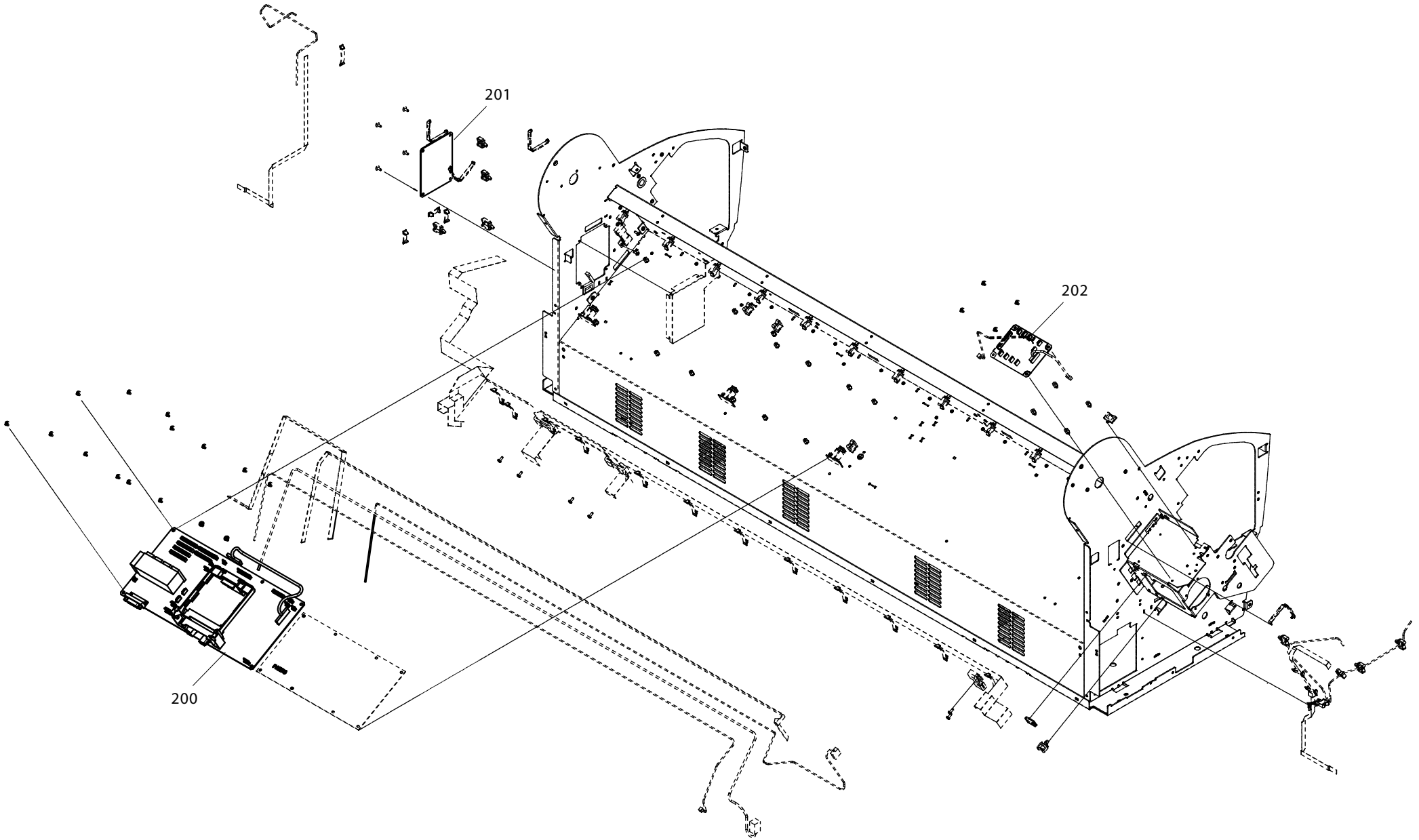
201
202
200

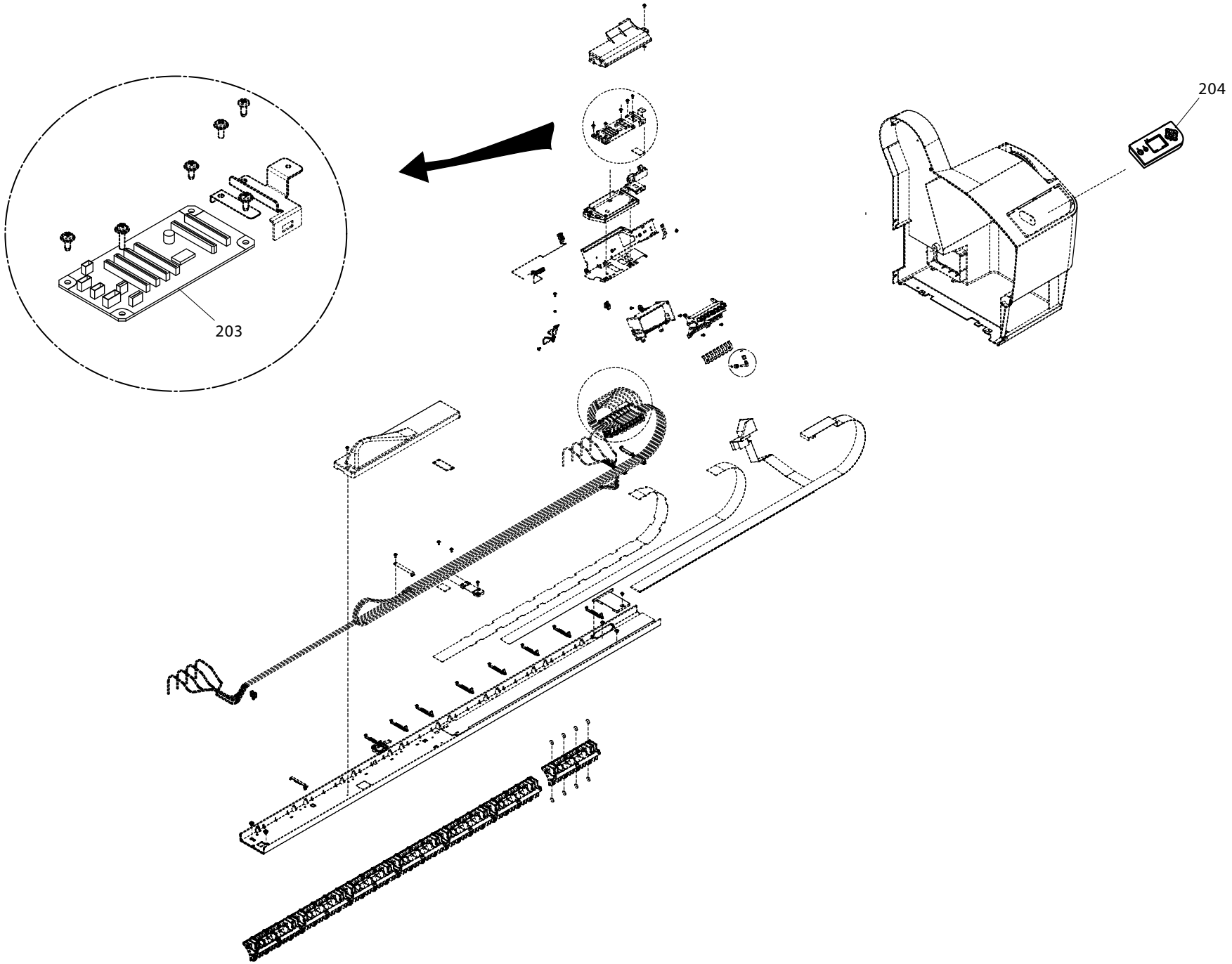
203
204

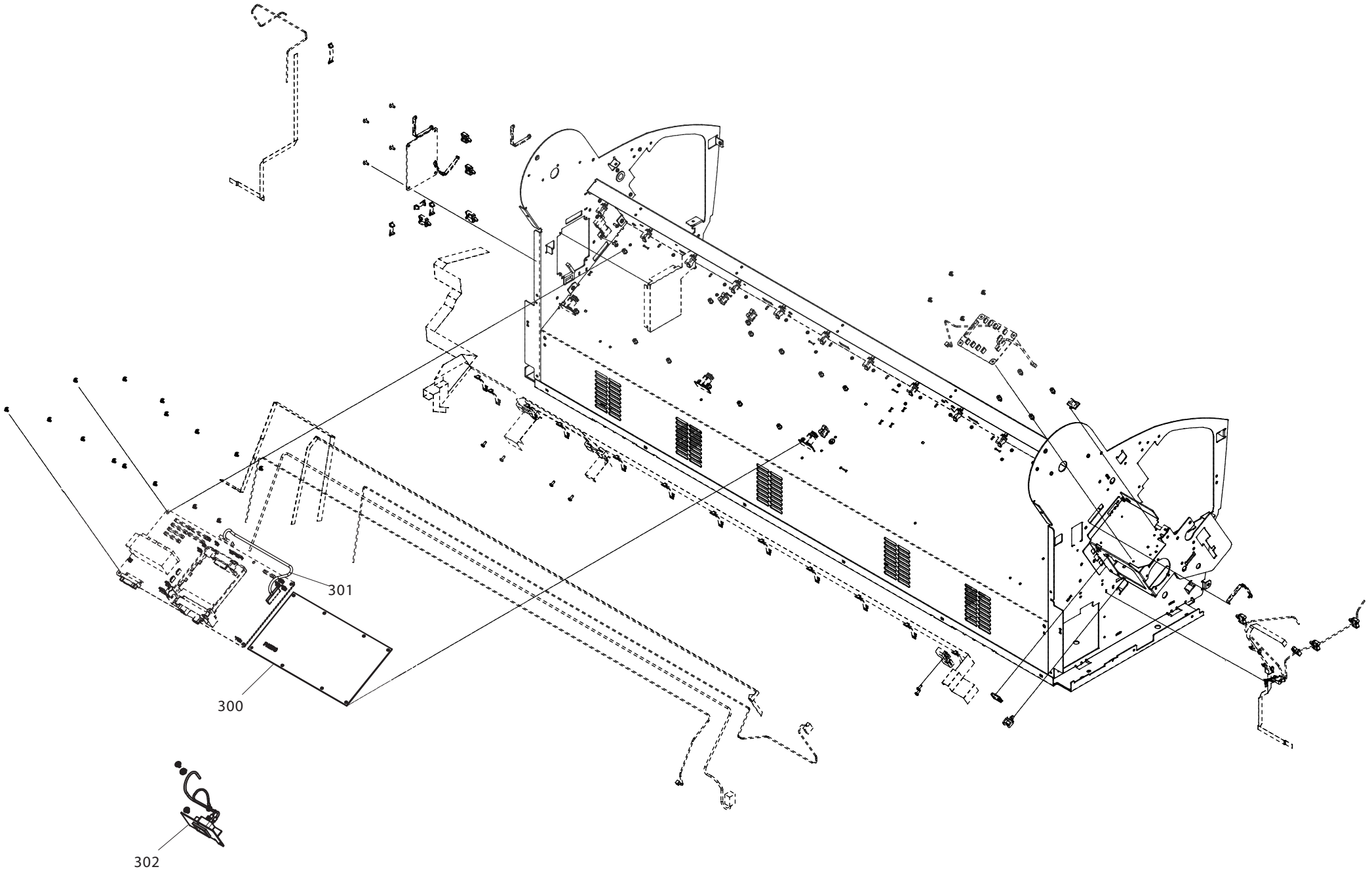
301
300
302

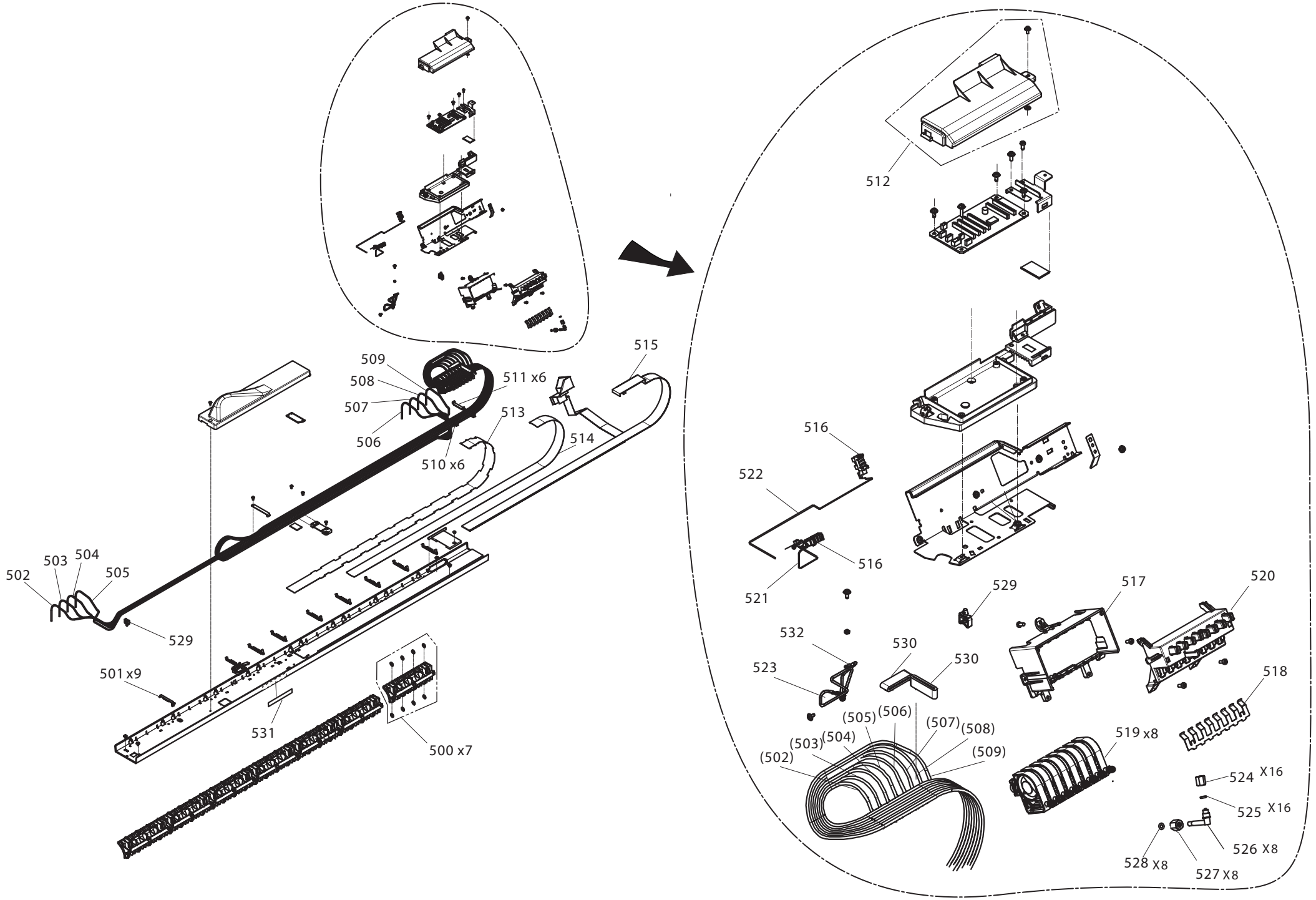

PX-9500,9500S / EPSON STYLUS PRO 9400,9800 No.06 Rev.01 C595-MECH-011

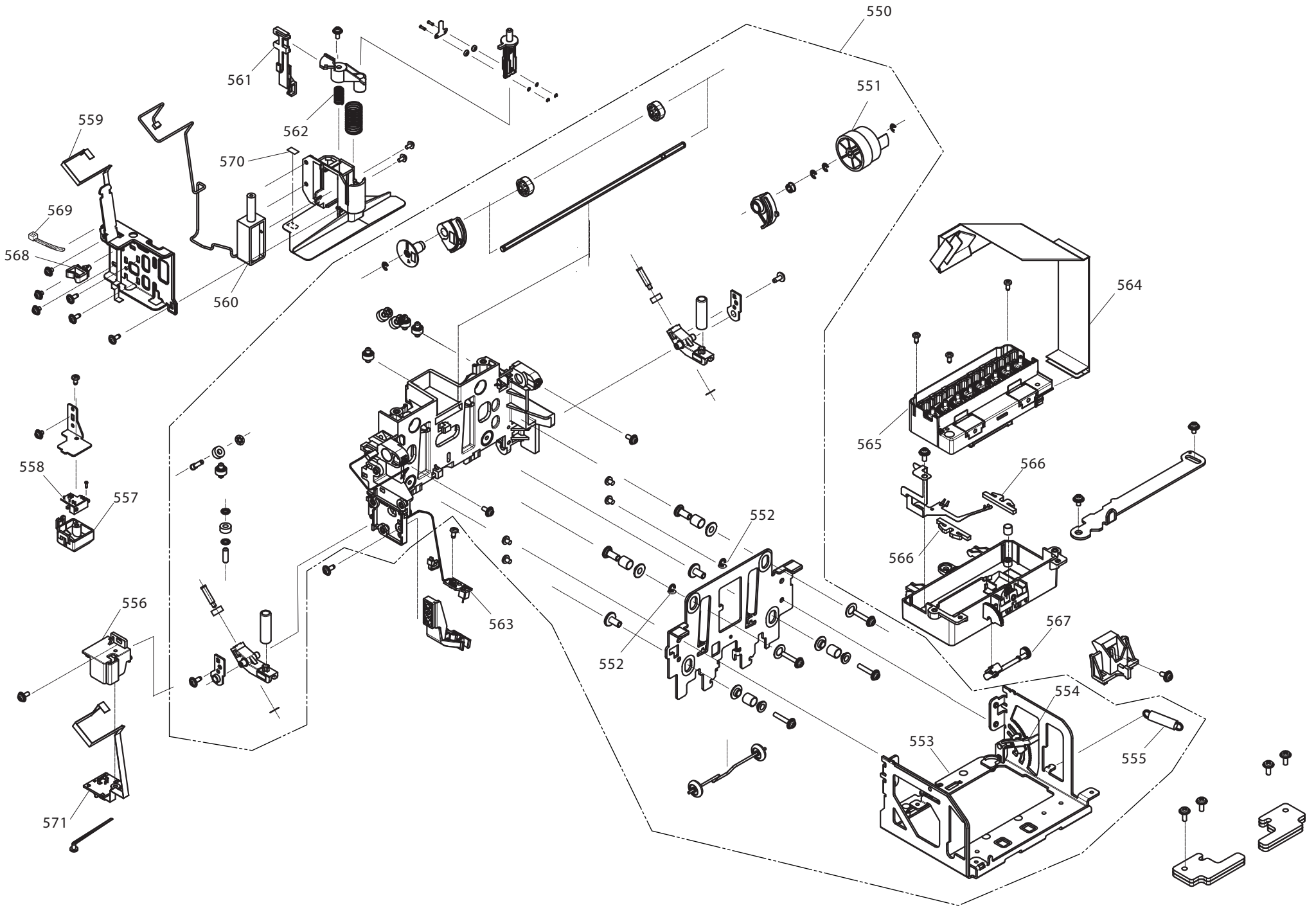

PX-9500,9500S / EPSON STYLUS PRO 9400,9800 No.07 Rev.01 C595-MECH-021

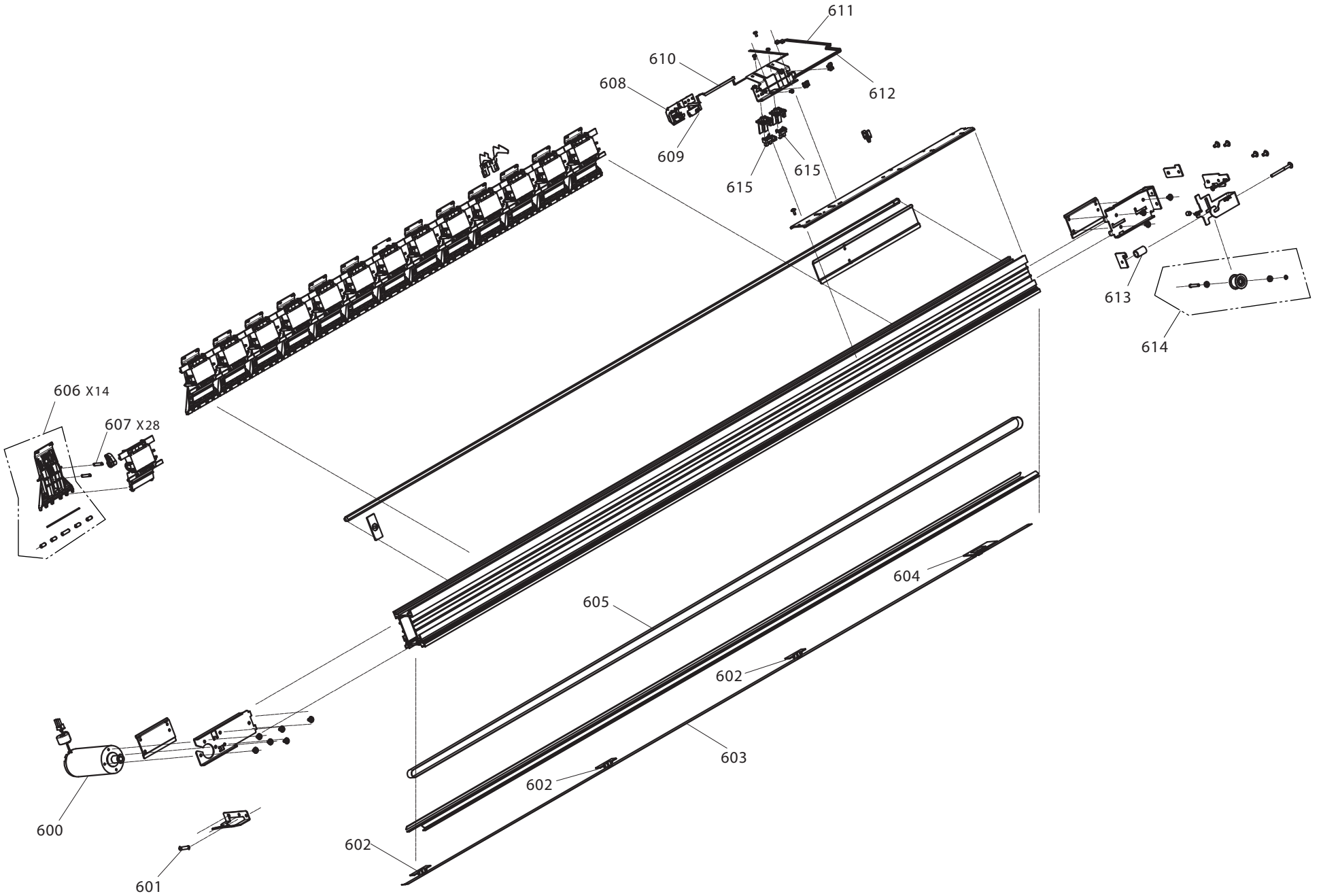

PX-9500,9500S / EPSON STYLUS PRO 9400,9800 No.08 Rev.01 C595-MECH-031

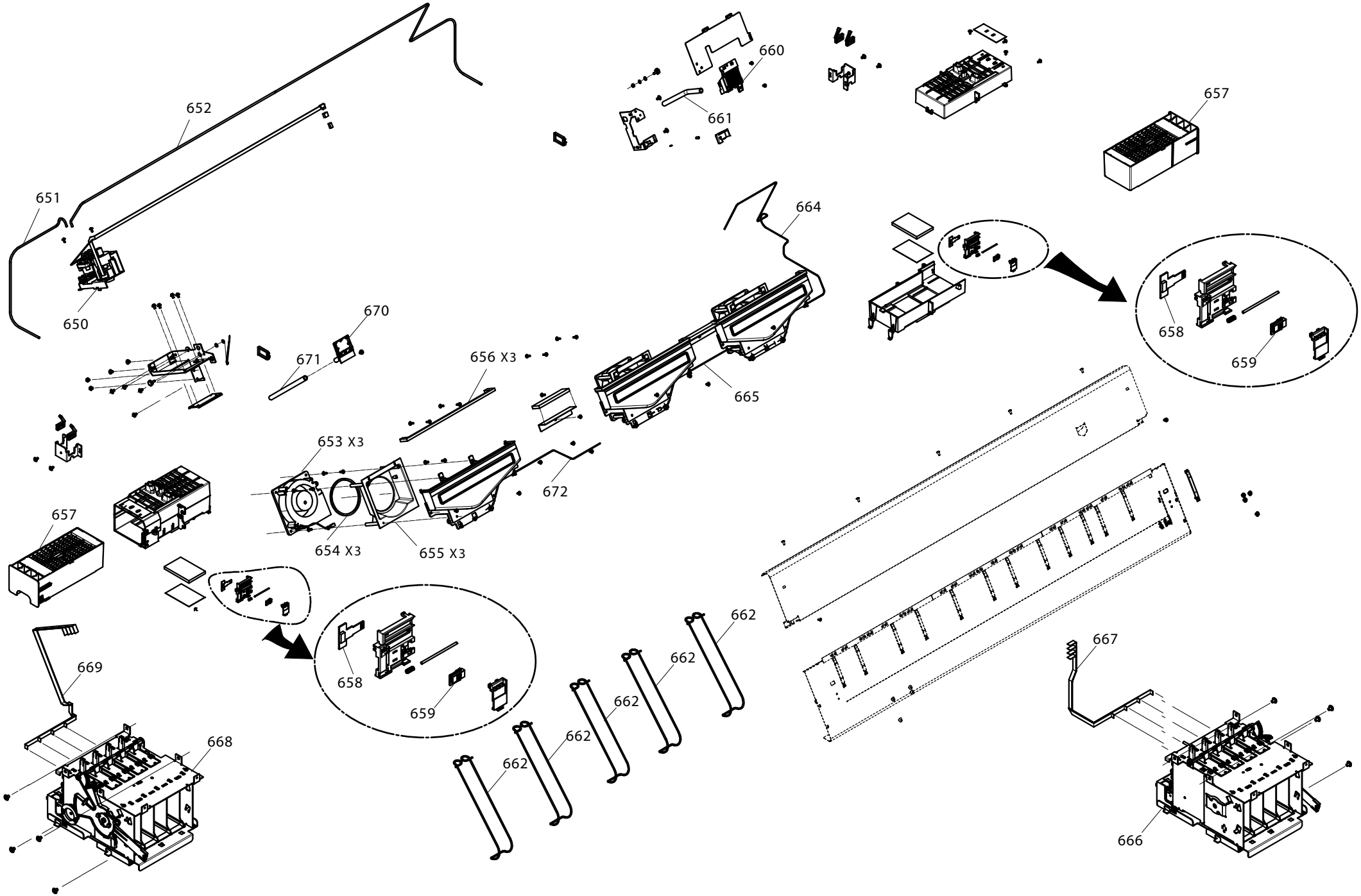

PX-9500,9500S / EPSON STYLUS PRO 9400,9800 No.09 Rev.01 C595-MECH-041

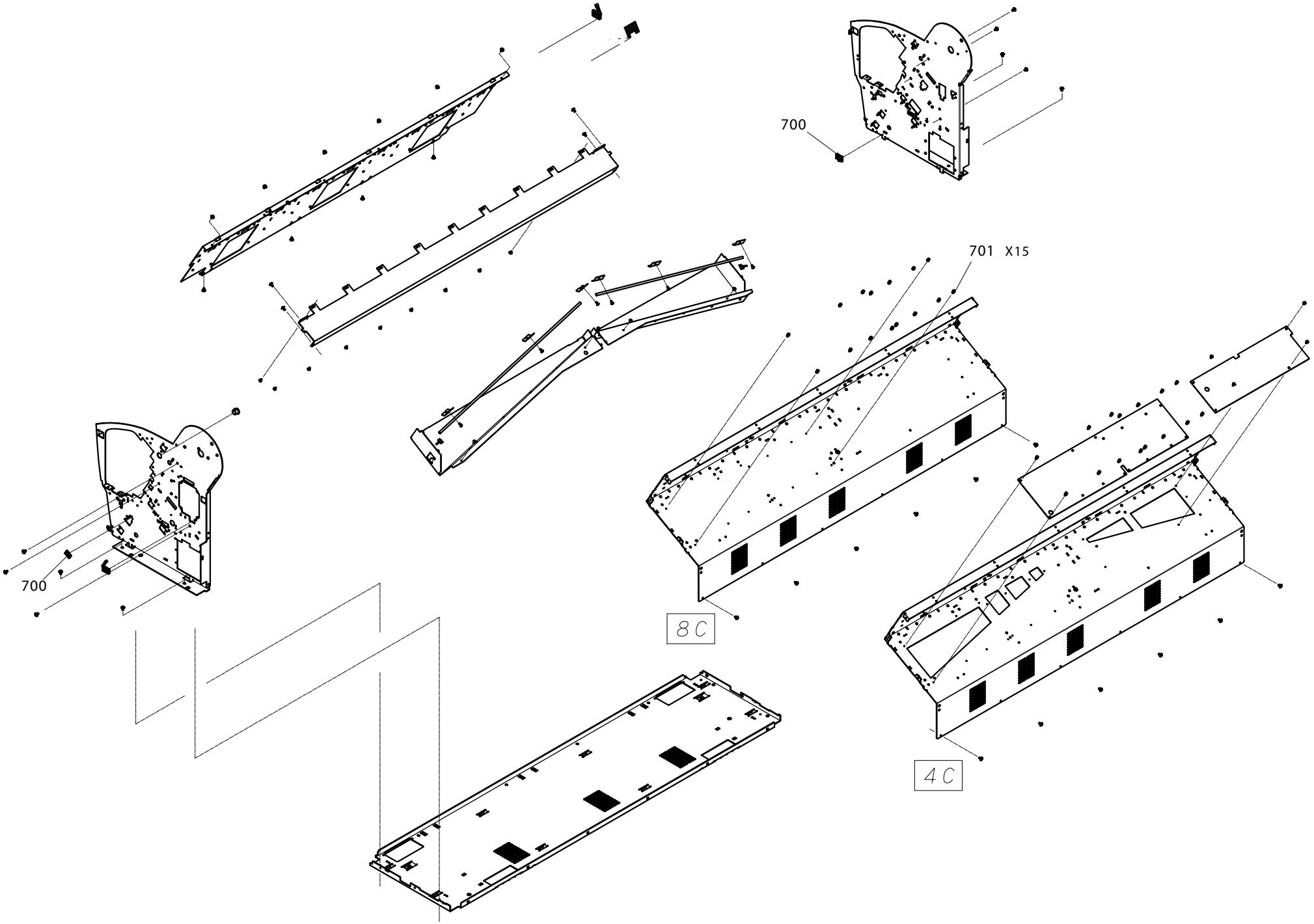

PX-9500,9500S / EPSON STYLUS PRO 9400,9800 No.10 Rev.01 C594-MECH-051

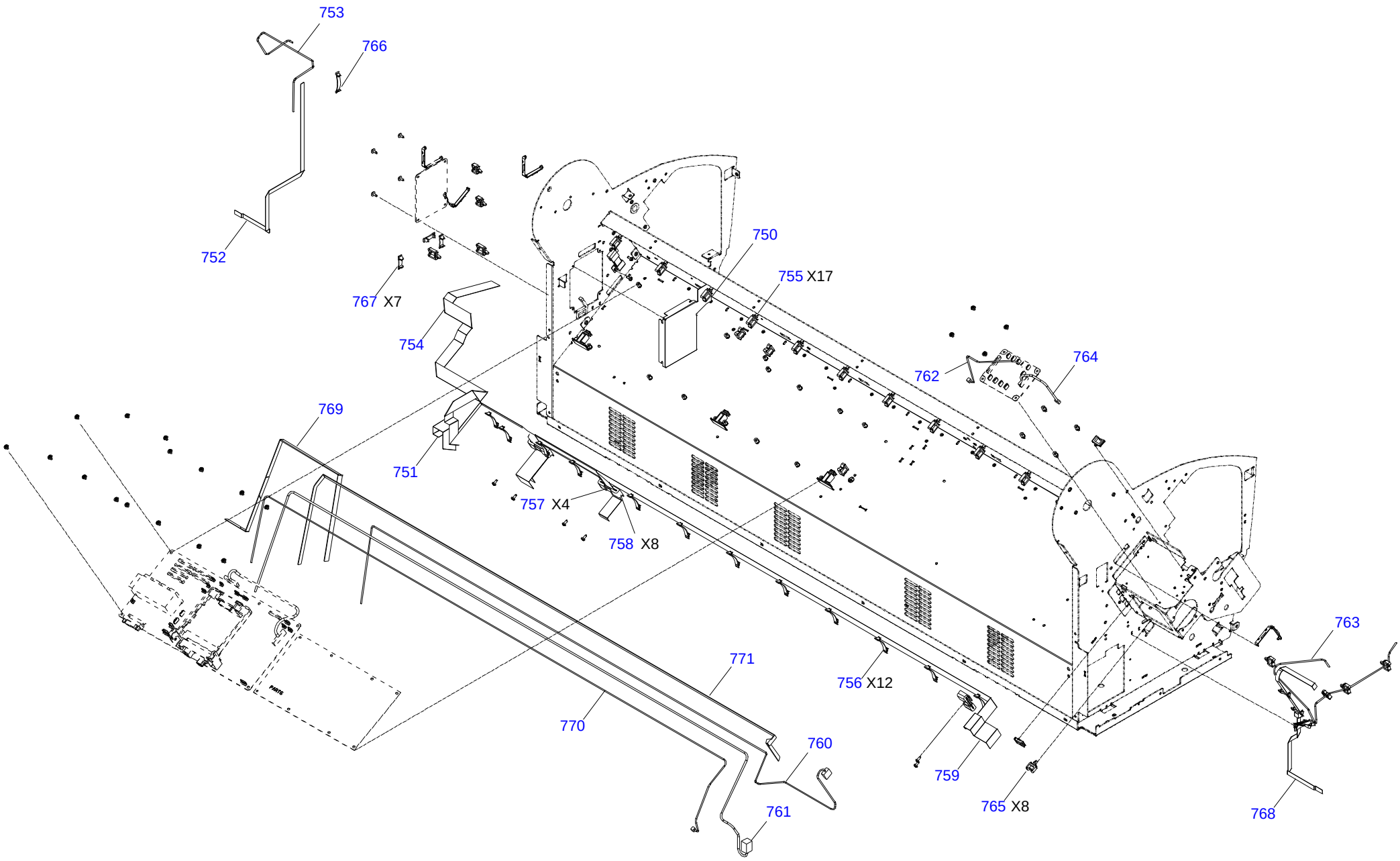
753
766
752
750
755 X17
767 X7
754
762
764
769
751
757 X4
758 X8
763
771
756 X12
770
760
759
761
765 X8
768

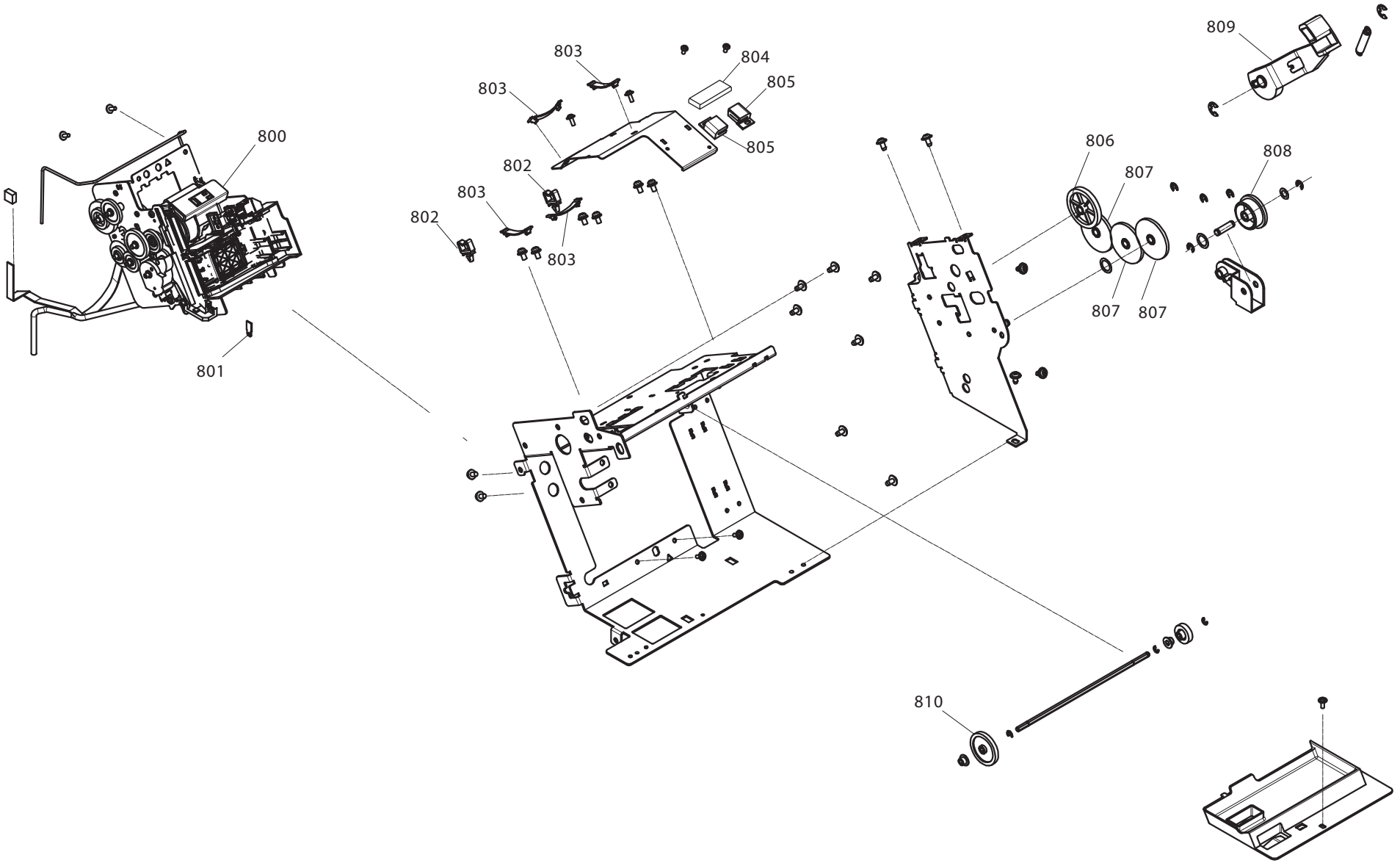
800
801
802
802
803
803
803
803
804
805
805
806
807
807
807
808
809
810

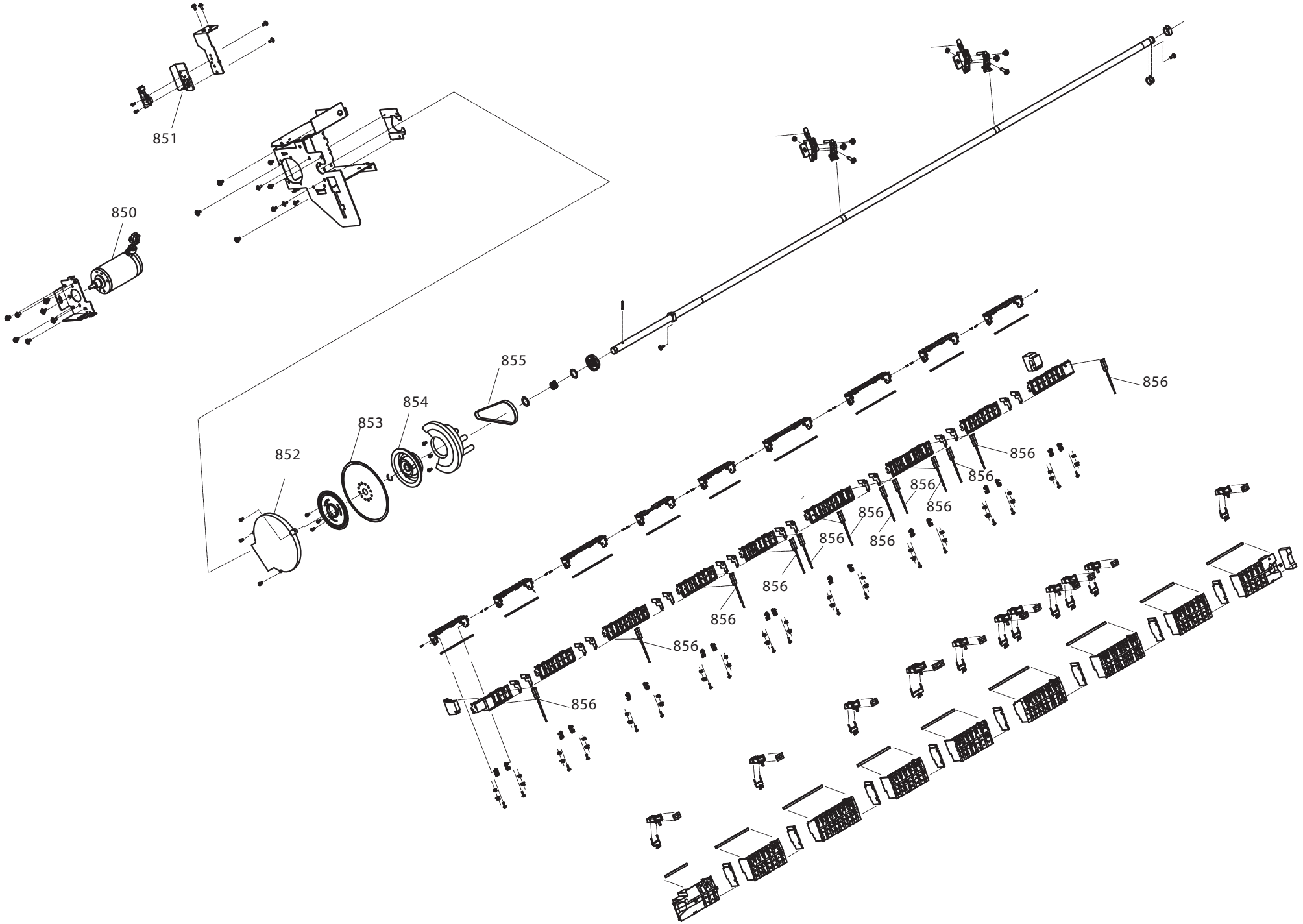

PX-9500,9500S / EPSON STYLUS PRO 9400,9800 No.13 Rev.01 C595-MECH-081

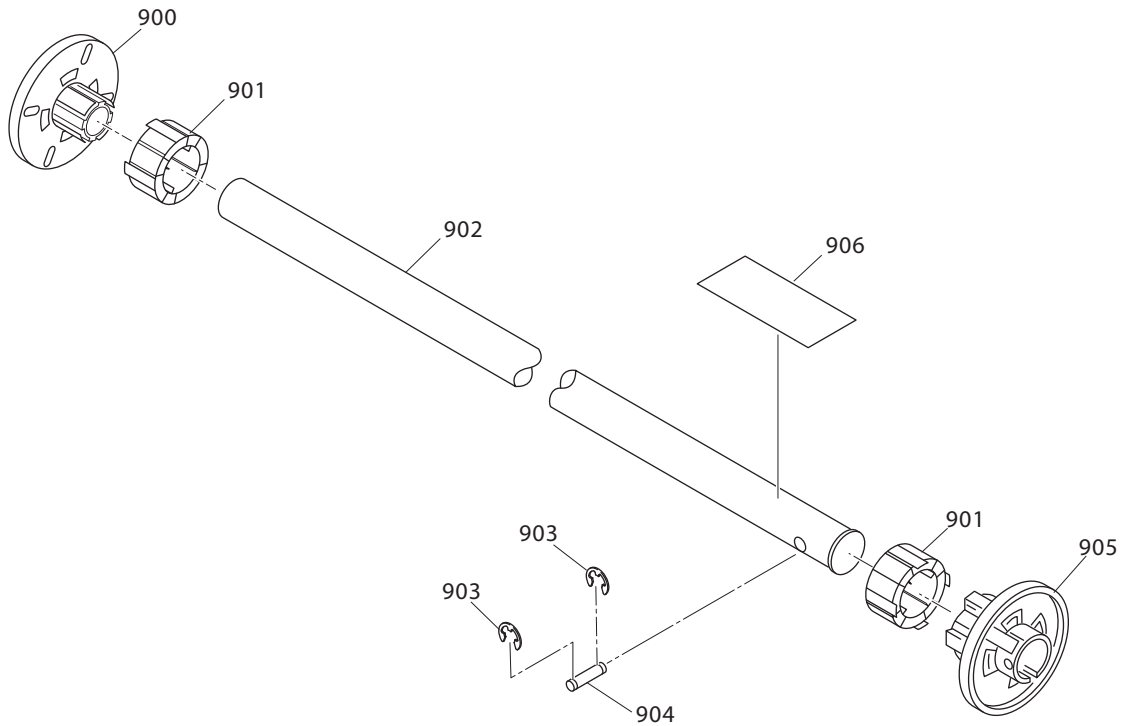
900
901
902
906
901
905
903
903
904

7.4 ASP List (Parts List)

7.4.1 ASP List for Stylus Pro 7800

Table 7-7. List for Stylus Pro 7800

Ref No.	Part Name
100	L SIDE COVER ASSY.
101	ROLL TRAY L ASSY.
102	ROLL TOP COVER,24
103	H TOP COVER ASSY.,24
104	CATCH
105	ROLL TRAY R ASSY.
106	DAMPER DISK (TOP COVER)
107	UNDULATE WASHER (TOP COVER)
108	PRSSURE LEVER KNOB
109	R SIDE COVER ASSY.
110	FRONT COVER ASSY.,24
111	BOARD SHEET STOPPER R
112	BOARD SHEET STOPPER L
113	I/H COVER R
114	KNOB,I/C,LOCK LEVER;C593
115	MIN SIDE LOCK#091Y
116	I/H COVER R ASSY.
117	I/H COVER L ASSY.
118	I/H COVER L
119	FRONT SENSOR COVER
120	COVER,I/F
121	GROUND PLATE,IF
122	FRONT COVER SPRING R,24
123	FRONT COVER SPRING L,24
124	LOGO PLATE,13X54;G
125	LABEL,ROLL PAPER SET,CHANGE

Table 7-7. List for Stylus Pro 7800 (continued)

Ref No.	Part Name
126	LABEL,CUT PAPER SET
127	LABEL,CUTTER CHANGE1
128	LABEL,ULTORA CHROME INK,K3;B
129	LABEL,MODEL NAME
130	LABEL,PAPER LEVER SET UP
131	LABEL,HAND POSITION,24
132	LABEL,CHOKE CLEANING
133	LABEL,CAUTION,TRANSPORT
150	P GUIDE U,24
151	P GUIDE ASSY.,24
152	RUBBER FOOT
200	BOARD ASSY.,MAIN
201	BOARD ASSY.,SUB
202	BOARD ASSY.,SUB
203	BOARD ASSY.,SUB
204	PANEL ASSY.
300	P/S BORAD ASSY.
301	DC CABLE ASSY.
302	INLET ASSY.
500	PAPER OUTLET ROLLER ASSY.
501	TUBE CLAMP
502	TUBE,SUPPLY,INK,#11,24
503	TUBE,SUPPLY,INK,#12,24
504	TUBE,SUPPLY,INK,#14,24
505	TUBE,SUPPLY,INK,#13,24
506	TUBE,SUPPLY,INK,#15,24
507	TUBE,SUPPLY,INK,#16,24
508	TUBE,SUPPLY,INK,#17,24
509	TUBE,SUPPLY,INK,#18,24
510	TUBE,FILME,STOPPER

Table 7-7. List for Stylus Pro 7800 (continued)

Ref No.	Part Name
511	TUBE,FFC,STOPPER
512	CR COVER ASSY.
513	TUBE FILME,24
514	SUS SUPPORT
515	CR FFC2
516	PHOTO SENSOR,SG2481
517	COVER,DUMPER
518	HOLDING SPRING,DUMPER
519	VALVE ASSY.,HEAD;C
520	HOLDER,DUMPER
521	PG ORG CABLE ASSY.
522	CR ORG CABLE ASSY.
523	FG CABLE ASSY.
524	JOINT SCREWS,M6
525	O RING,TUBE FASTEN
526	JOINT,2,L
527	CONNECTING SCREW,M7
528	O RING,CONNECTER,M7
529	CABLE CLAMP
530	FLAT CORE (SSC-40-12)
531	LABEL,CUTTER CHANGE2
550	CARRIAGE ASSY.
551	SLIDE GEAR
552	HEAD PG SPRING
553	H ADJUST SLIDE CORE ARBOR LEVER
554	H ADJUST LEVER
555	H ADJUST SPRING
556	CR ENCODER HOLDER
557	INK SENSOR COVER
558	BOARD ASSY.,INK MARK

Table 7-7. List for Stylus Pro 7800 (continued)

Ref No.	Part Name
559	IM SENSOR FFC
560	CUTTER SOLENOID ASSY.
561	CR LOCK KICKER
562	SOLENOID SPRING
563	EDGE SENSOR CABLE ASSY.
564	HEAD FFC ASSY.
565	PRINT HEAD
566	POROUS PAD,CR
567	HEAD ADJUST LEVER
568	CABLE CLAMP
569	TILAP
570	LABEL,CUT POSITION
571	BOARD ASSY.,ENCODER,CR;B
600	CR MOTER ASSY.
601	CR SCALE SPRING
602	SCALE CENTER GUIDE C
603	SCALE CR,24
604	FENCE GUIDE R
605	CR BELT
606	DRIVE ROLLER C ASSY.
607	PRESS SPRING
608	P REAR SENSOR HOLDER
609	BOARD ASSY.,PW
610	P REAR FFC
611	P THICK2 SENSOR CABLE ASSY.
612	P THICK1 SENSOR CABLE ASSY.
613	TENSION SPRING
614	CR DRIVE PULLEY ASSY.,24
615	PHOTO SENSOR,SG2481
650	PUMP ASSY.,SUPPLY

Table 7-7. List for Stylus Pro 7800 (continued)

Ref No.	Part Name
651	TUBE,PRESSURIZING,FULL
652	TUBE,PRESSURIZING,24
653	VACUUM FAN ASSY.
654	SEAL FAN
655	DUCT FAN B
656	SEAL HOLD
657	POROUS PAD ASSY.,INK EJECT
658	BOARD ASSY.,IC
659	CONNECTOR,CARTRIDGE,PR
660	BOX ASSY.,FLUSHING
661	TUBE INK WASTE R
662	PAPER GUIDE P,24
663	PAPER GUIDE HOLDER
664	VACUUM FAN1 CABLE ASSY.
665	VACUUM FAN2 CABLE ASSY.
666	HOLDER ASSY.,IC,RIGHT,8C
667	INK FFC R ASSY.
668	HOLDER ASSY.,IC,LEFT,8C
669	INK FFC L ASSY.
700	EDGE SADDLE
701	HEXAGON STUD,M3X8
750	PCB COVER
751	TERM R FFC
752	INK FFC2
753	PUMP PHASE CABLE ASSY.
754	PANEL FFC
755	CABLE CLAMP
756	FLAT CLAMP,FCR-35
757	FLAT CORE (SSC-40-12)
758	FLAT CORE HOLDER

Table 7-7. List for Stylus Pro 7800 (continued)

Ref No.	Part Name
759	TERM L EEC1
760	CR MOTER CABLE 1 ASSY.
761	PF MOTER CABLE 1 ASSY.
762	PRESS POS CABLE ASSY.
763	F COVER CABLE ASSY.
764	PF ENC CABLE ASSY.
765	EDGE SADDLE
766	FLAT CLAMP (FCR-30-V0)
767	FLAT CLAMP,FCR-15 V0
800	PUMP CAP ASSY.
801	CLEANER,HEAD,A,ASP
802	CABLE CLAMP
803	FLAT CLAMP (FCR-30-V0)
804	FLAT CORE (SSC-40-12)
805	FLAT CORE HOLDER
806	PG REDUCTION GEAR,17,39
807	PG IDLE GEAR A
808	PG IDLE GEAR B
809	PRESS LEVER
810	PG CONNECT GEAR,40
850	PF MOTER ASSY.,24
851	BOARD ASSY.,ENCODER
852	PF ENC COVER B
853	SCALE,PF
855	X REDUCTION BELT
856	POROUS PAD
900	FLANGE,LEFT
901	ADAPTER
902	ROLL SHAFT
903	E-RING,3,F/UC-3C

Table 7-7. List for Stylus Pro 7800 (continued)

Ref No.	Part Name
904	STOPPER SHAFT
905	FLANGE,RIGHT
906	LABEL,ROLLPAPER SET,2/3 INCH
NON FIG	CR STOPPER ASSY.
NON FIG	INK CART.BOXED,PBK,PIG'T;D38C,110,AS
NON FIG	INK CART.BOXED,C,PIG'T;D38C,110,AS
NON FIG	INK CART.BOXED,M,PIG'T;D38C,110,AS
NON FIG	INK CART.BOXED,Y,PIG'T;D38C,110,AS
NON FIG	INK CART.BOXED,LC,PIG'T;D38C,110,AS
NON FIG	INK CART.BOXED,LM,PIG'T;D38C,110,AS
NON FIG	INK CART.BOXED,LBK,PIG'T;D38C,110,AS
NON FIG	INK CART.BOXED,LLBK,PIG'T;D38C,110,AS
NON FIG	KIMOTO MICRO TRACE#300;A-3
NON FIG	TENSION GAUGE 40N
NON FIG	GREASE G-26
NON FIG	TENSION GAUGE (10N)
NON FIG	CLEANING CART.BOXED;D38C,AS
NON FIG	BLACK CONVERSION KIT,AS,D38C

7.4.2 ASP List for Stylus Pro 9800

Table 7-8. ASP List for Stylus Pro 9800

Ref No.	Part Name
100	L SIDE COVER ASSY.
101	ROLL TRAY L ASSY.
102	ROLL TOP COVER,44
103	H TOP COVER ASSY.,44
104	CATCH
105	ROLL TRAY R ASSY.
106	DAMPER DISK (TOP COVER)
107	UNDULATE WASHER (TOP COVER)
108	PRSSURE LEVER KNOB
109	R SIDE COVER ASSY.
110	FRONT COVER ASSY.,44
111	BOARD SHEET STOPPER R
112	BOARD SHEET STOPPER L
113	I/H COVER R
114	KNOB,I/C,LOCK LEVER;C593
115	MIN SIDE LOCK#091Y
116	I/H COVER R ASSY.
117	I/H COVER L ASSY.
118	I/H COVER L
119	FRONT SENSOR COVER
120	COVER,I/F
121	GROUND PLATE,IF
122	FRONT COVER SPRING R,44
123	FRONT COVER SPRING L,44
124	LOGO PLATE,13X54;G
125	LABEL,ROLL PAPER SET,CHANGE
126	LABEL,CUT PAPER SET
127	LABEL,CUTTER CHANGE1
128	LABEL,ULTORA CHROME INK,K3;B

Table 7-8. ASP List for Stylus Pro 9800 (continued)

Ref No.	Part Name
129	LABEL,MODEL NAME
130	LABEL,PAPER LEVER SET UP
131	LABEL,HAND POSITION,44
132	LABEL,CHOKE CLEANING
133	LABEL,CAUTION,TRANSPORT
134	BOARD SHEET STOPPER C
150	P GUIDE U,44
151	PGUIDE L ASSY.,44
152	HANDLE
200	BOARD ASSY.,MAIN
201	BOARD ASSY.,SUB
202	BOARD ASSY.,SUB
203	BOARD ASSY.,SUB
204	PANEL ASSY.
300	P/S BORAD ASSY.
301	DC CABLE ASSY.
302	INLET ASSY.
500	PAPER OUTLET ROLLER ASSY.
501	TUBE CLAMP
502	TUBE,SUPPLY,INK,#1,44
503	TUBE,SUPPLY,INK,#2,44
504	TUBE,SUPPLY,INK,#3,44
505	TUBE,SUPPLY,INK,#4,44
506	TUBE,SUPPLY,INK,#5,44
507	TUBE,SUPPLY,INK,#6,44
508	TUBE,SUPPLY,INK,#7,44
509	TUBE,SUPPLY,INK,#8,44
510	TUBE,FILME,STOPPER
511	TUBE,FFC,STOPPER
512	CR COVER ASSY.

Table 7-8. ASP List for Stylus Pro 9800 (continued)

Ref No.	Part Name
513	TUBE FILME,44
514	SUS SUPPORT
515	CR FFC2
516	PHOTO SENSOR,SG2481
517	COVER,DUMPER
518	HOLDING SPRING,DUMPER
519	VALVE ASSY.,HEAD;C
520	HOLDER,DUMPER
521	PG ORG CABLE ASSY.
522	CR ORG CABLE ASSY.
523	FG CABLE ASSY.
524	JOINT SCREWS,M6
525	O RING,TUBE FASTEN
526	JOINT,2,L
527	CONNECTING SCREW,M7
528	O RING,CONNECTER,M7
529	CABLE CLAMP
530	FLAT CORE (SSC-40-12)
531	LABEL,CUTTER CHANGE2
532	FG CABLE,44
550	CARRIAGE ASSY.
551	SLIDE GEAR
552	HEAD PG SPRING
553	H ADJUST SLIDE CORE ARBOR LEVER
554	H ADJUST LEVER
555	H ADJUST SPRING
556	CR ENCODER HOLDER
557	INK SENSOR COVER
558	BOARD ASSY.,INK MARK
559	IM SENSOR FFC

Table 7-8. ASP List for Stylus Pro 9800 (continued)

Ref No.	Part Name
560	CUTTER SOLENOID ASSY.
561	CR LOCK KICKER
562	SOLENOID SPRING
563	EDGE SENSOR CABLE ASSY.
564	HEAD FFC ASSY.
565	PRINT HEAD
566	POROUS PAD,CR
567	HEAD ADJUST LEVER
568	CABLE CLAMP
569	TILAP
570	LABEL,CUT POSITION
571	BOARD ASSY.,ENCODER,CR;B
600	CR MOTER ASSY.
601	CR SCALE SPRING
602	SCALE CENTER GUIDE C
603	SCALE,CR,44
604	FENCE GUIDE R
605	CR BELT
606	DRIVE ROLLER C ASSY.
607	PRESS SPRING
608	P REAR SENSOR HOLDER
609	BOARD ASSY.,PW
610	P REAR FFC
611	P THICK2 SENSOR CABLE ASSY.
612	P THICK1 SENSOR CABLE ASSY.
613	TENSION SPRING
614	CR DRIVE PULLEY ASSY.,44
615	PHOTO SENSOR,SG2481
650	PUMP ASSY.,SUPPLY
651	TUBE,PRESSURIZING,FULL

Table 7-8. ASP List for Stylus Pro 9800 (continued)

Ref No.	Part Name
652	TUBE,PRESSURIZING,44
653	VACUUM FAN ASSY.
654	SEAL FAN
655	DUCT FAN B
656	SEAL HOLD
657	POROUS PAD ASSY.,INK EJECT
658	BOARD ASSY.,IC
659	CONNECTOR,CARTRIDGE,PR
660	BOX ASSY.,FLUSHING
661	TUBE INK WASTE R
662	PAPER GUIDE P44
663	PAPER GUIDE HOLDER
664	VACUUM FAN1 CABLE ASSY.
665	VACUUM FAN2 CABLE ASSY.
666	HOLDER ASSY.,IC,RIGHT,8C
667	INK FFC R ASSY.
668	HOLDER ASSY.,IC,LEFT,8C
669	INK FFC L ASSY.
670	BOX ASSY.,FLUSHING,44
671	TUBE INK WASTE L
672	VACUUM FAN3 CABLE ASSY.
700	EDGE SADDLE
701	HEXAGON STUD,M3X8
750	PCB COVER
751	TERM R FFC
752	INK FFC2
753	PUMP PHASE CABLE ASSY.
754	PANEL FFC
755	CABLE CLAMP
756	FLAT CLAMP,FCR-35

Table 7-8. ASP List for Stylus Pro 9800 (continued)

Ref No.	Part Name
757	FLAT CORE (SSC-40-12)
758	FLAT CORE HOLDER
759	TERM L FFC2
760	CR MOTER CABLE 2 ASSY.
761	PF MOTER CABLE 2 ASSY.
762	PRESS POS CABLE ASSY.
763	F COVER CABLE ASSY.
764	PF ENC CABLE ASSY.
765	EDGE SADDLE
766	FLAT CLAMP (FCR-30-V0)
767	FLAT CLAMP,FCR-15 V0
768	INK FFC1
769	PUMP MOTER CABLE ASSY.
770	RE SOL JUNCTION CABLE ASSY.
771	PRESS MOT JUNCTION CABLE ASSY.
800	PUMP CAP ASSY.
801	CLEANER,HEAD,A,ASP
802	CABLE CLAMP
803	FLAT CLAMP (FCR-30-V0)
804	FLAT CORE (SSC-40-12)
805	FLAT CORE HOLDER
806	PG REDUCTION GEAR,17,39
807	PG IDLE GEAR A
808	PG IDLE GEAR B
809	PRESS LEVER
810	PG CONNECT GEAR,40
850	PF MOTOR PULLEY ASSY.
851	BOARD ASSY.,ENCODER
852	PF ENC COVER B
853	SCALE,PF

Table 7-8. ASP List for Stylus Pro 9800 (continued)

Ref No.	Part Name
854	REDUCTION PULLE
855	X REDUCTION BELT
856	POROUS PAD
900	FLANGE,LEFT
901	ADAPTER
902	ROLL SHAFT
903	E-RING,3,F/UC-3C
904	STOPPER SHAFT
905	FLANGE,RIGHT
906	LABEL,ROLLPAPER SET,2/3 INCH
NON FIG	CR STOPPER ASSY.
NON FIG	INK CART.BOXED,PBK,PIG'T;D38C,110,AS
NON FIG	INK CART.BOXED,C,PIG'T;D38C,110,AS
NON FIG	INK CART.BOXED,M,PIG'T;D38C,110,AS
NON FIG	INK CART.BOXED,Y,PIG'T;D38C,110,AS
NON FIG	INK CART.BOXED,LC,PIG'T;D38C,110,AS
NON FIG	INK CART.BOXED,LM,PIG'T;D38C,110,AS
NON FIG	INK CART.BOXED,LBK,PIG'T;D38C,110,AS
NON FIG	INK CART.BOXED,LLBK,PIG'T;D38C,110,AS
NON FIG	KIMOTO MICRO TRACE#300;A-3
NON FIG	TENSION GAUGE 40N
NON FIG	GREASE G-26
NON FIG	TENSION GAUGE (10N)
NON FIG	CLEANING CART.BOXED;D38C,AS
NON FIG	BLACK CONVERSION KIT,AS,D38C