ASTRO

AMC-2000 SERIES
ENVELOPE FEEDER

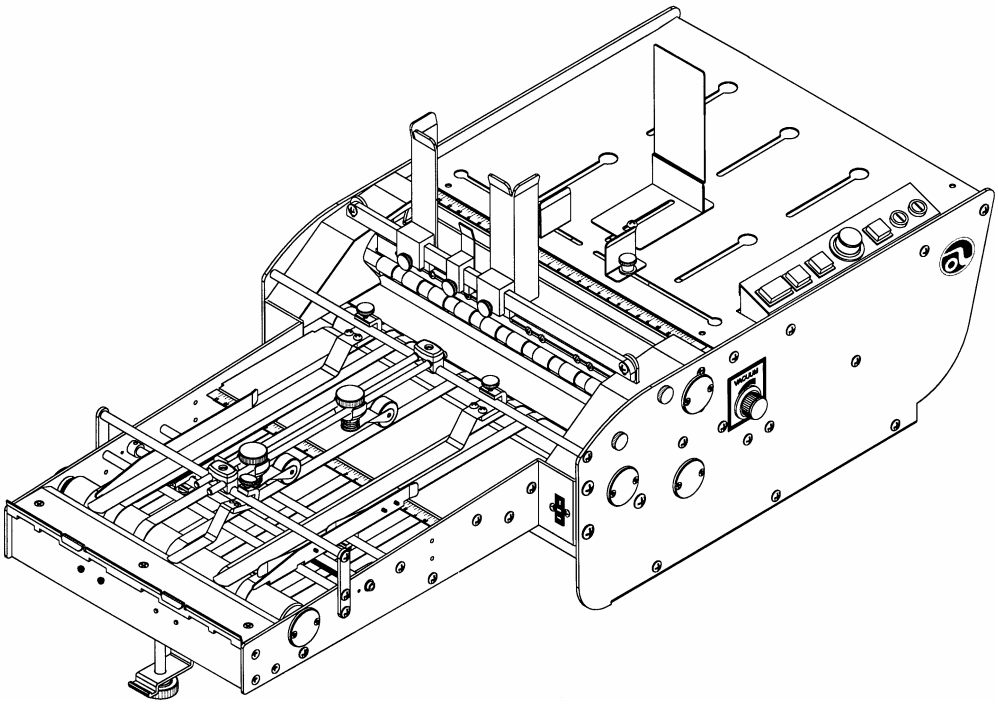

PARTS CATALOG

GROUP 1

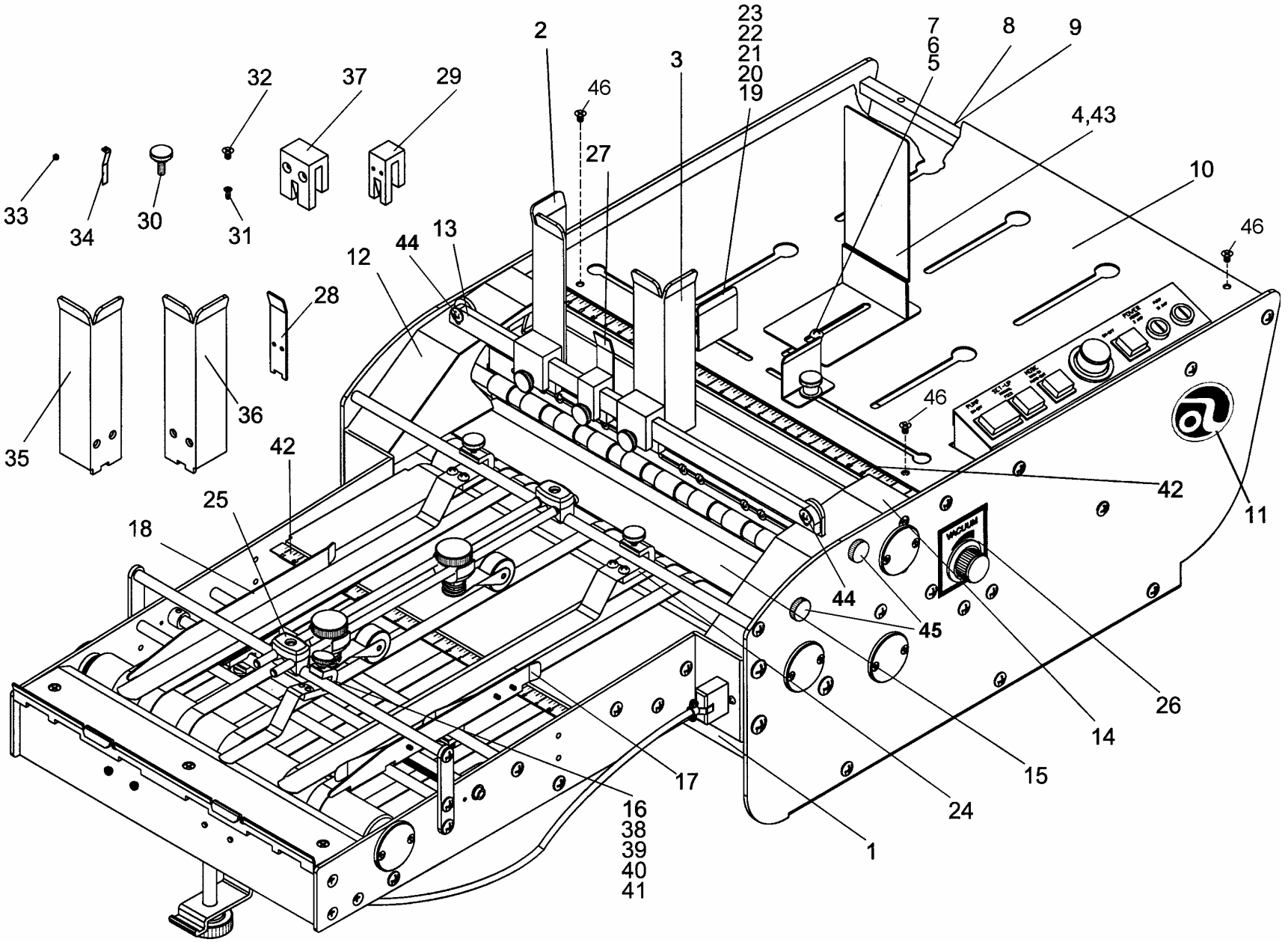
2
23
22
21
20
19
3
7
6
5
8
9
4,43
10
46
27
32
37
29
33
34
30
31
12
44
13
28
35
36
42
25
18
46
42
11
44
45
26
14
15
24
17
16
38
39
40
41
1

KEY #	PART #	DESCRIPTION	QTY.	KEY #	PART #	DESCRIPTION	QTY.
1.	84-100-56B	FRONT FRAME CLOSURE	1	25.	84-130-20	SKID WHEEL ASSEMBLY	1
2.	71-140-08	FRONT R/H ENV. GUIDE ASSY	1	26.	123-0407	VACUUM DECAL	1
3.	71-140-10	FRONT L/H ENV. GUIDE ASSEMBLY	1	27.	71-140-13	CENTER GUIDE ASSEMBLY	1
4.	84-108-25	REAR ENVELOPE GUIDE	1	28.	71-108-15	PLATE, CENTER GUIDE	1
5.	84-108-22	SCREW, 1/4-20, REAR ENV. GUIDE	1	29.	71-109-11	CLAMP CENTER GUIDE	1
6.	84-108-23	T-NUT, REAR ENV. GUIDE	1	30.	71-108-09	THUMBSCREW	3
7.	123-0073	PIN, COTTER 1/16 X 3/4	1	31.	123-0975	SCREW, 4-40 X 1/4 PHL. FL. HD.	2
8.	84-108-02	BEAM, REAR TOP PLATFORM	1	32.**	123-0126	SCREW, 8-32 X 1/4	4
9.	84-100-22B	REAR FRAME CLOSURE	1	33.	123-0010	SET SCREW, 6-32	3
10.	84-108-03	TOP PLATFORM	1	34.	71-109-05	SHEET SEPARATOR (STANDARD)	3
11.	123-0752	ASTRO LOGO DECAL	1	34.	71-109-05B	SHEET SEPARATOR (HEAVY)	3
12.	84-100-75B	COVER, R/H	1	35.	71-108-06A	ENVELOPE GUIDE, R/H FRONT	1
13.	84-100-81	BEAM, FRONT SUPPORT	1	36.	71-108-04A	ENVELOPE GUIDE, L/H FRONT	1
14.	84-100-74B	COVER, L/H	1	37.	71-109-03A	CLAMP, ENVELOPE GUIDE	2
15.	84-100-20	PLATE, FEEDER FRONT	1	38.	84-125-111	RETAINER STRAP, FRONT	1
16.	84-125-110	FRONT RETAINER STRAP ASSEMBLY	1	39.	84-125-112	CLAMP, FRONT RETAINER	1
17.	56-114-04	SIDE GUIDE ASSEMBLY, L/H	1	40.	71-109-07	THUMBSCREW	1
18.	56-114-03	SIDE GUIDE ASSEMBLY, R/H	1	41.	123-0461	SCREW, 6-32 X 1/8	2
19.	84-100-15	GUIDE ASSEMBLY, ANTI-SKEWING	2	42.	123-0328	SCALE GUIDE	2
20.	123-0433	BOLT, CARRIAGE	2	43.	84-108-20	REAR ENVELOPE GUIDE ASSEMBLY	1
21.	123-0063	WASHER	2	*43.	84-108-20L	REAR ENVELOPE GUIDE ASSY (LONG)	
22.	123-0460	KNOB	2	44.	123-0180	SCREW, 10-32 X 1/2 TRUSS. H. PH.	2
23.	74-100-13	GUIDE PLATE	2	45	84-114-34	THUMBSCREW ASSEMBLY	4
24.	84-125-108	RETAINER STRAP ASSEMBLY	2	46	123-0017	SCREW, 10-32 X 1/4	4

* NOT SHOWN

** CAUTION – When replacing this set screw apply LOCTITE 242 Threadlocker (P/N: 123-1779) to the threads.

GROUP 1

GROUP 1A

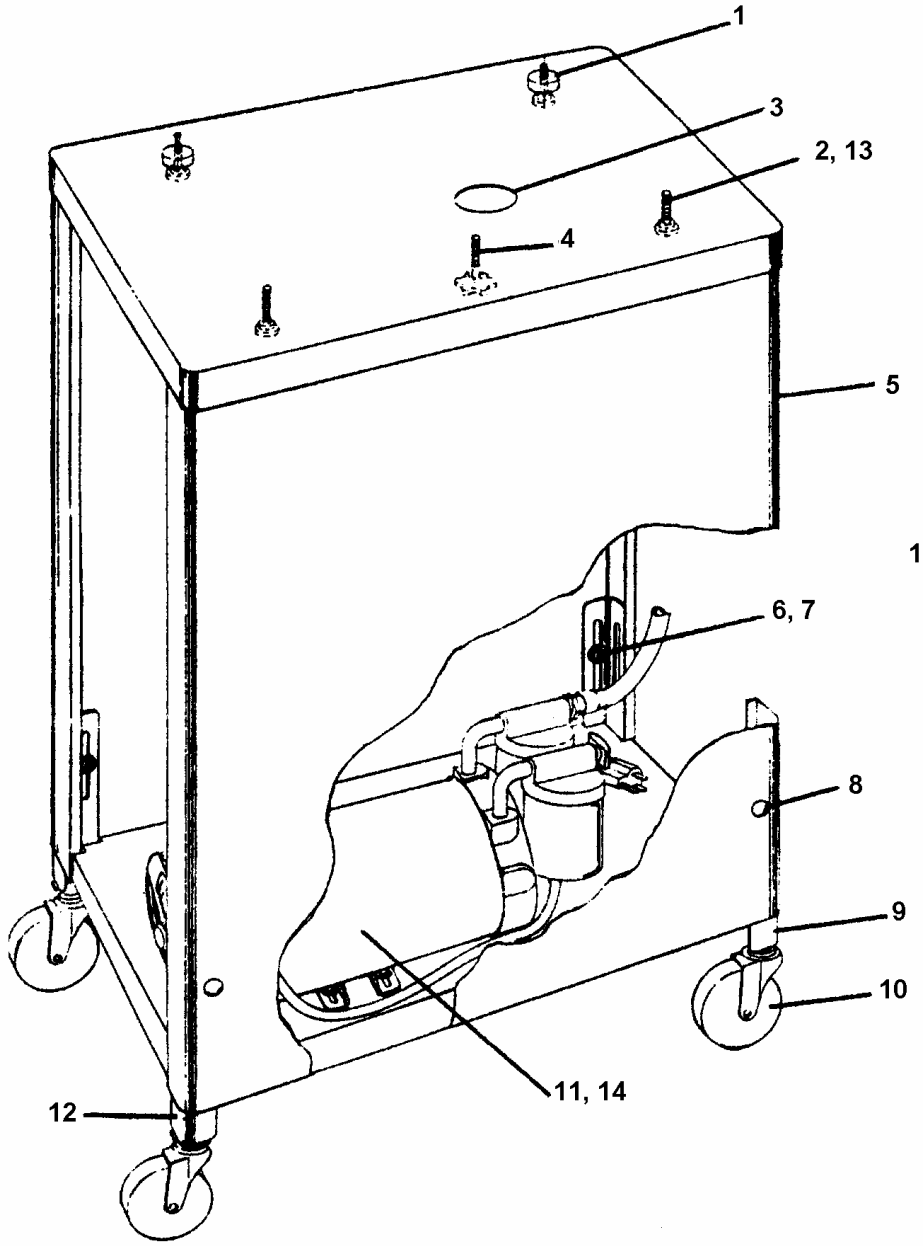

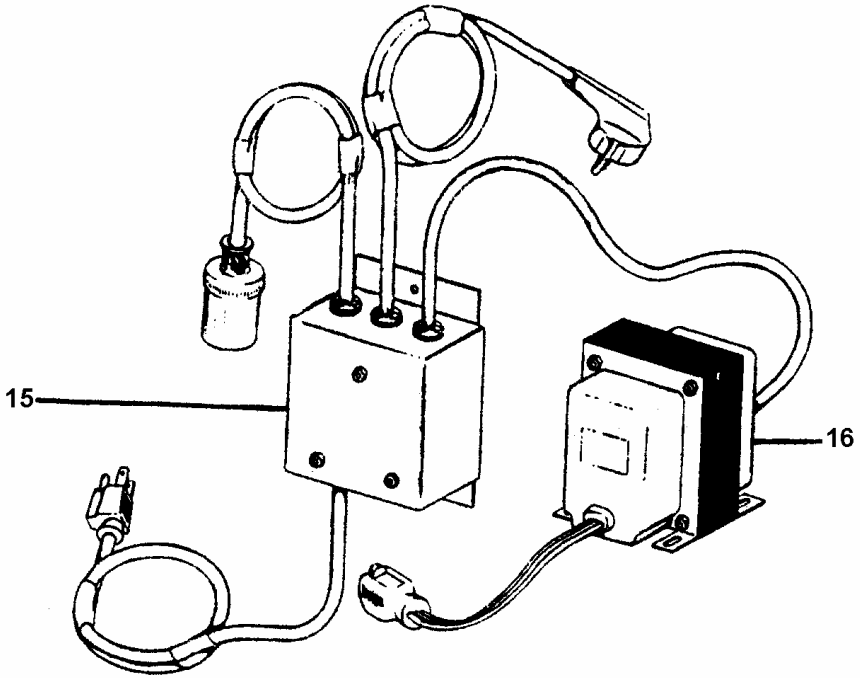

KEY #	PART #	DESCRIPTION	QTY.
1.	123-0208	PAD, RUBBER BASE	1
2.	80-108-20	LOCKING THUMBSCREW ASSEMBLY	4
3.	123-0394	GROMMET, CATERPILLAR	1
4.	80-108-22	LEVELING KNOB ASSEMBLY	1
5.	84-103-01	STAND WELDMENT	1
6.	123-0054	NUT, HEX 1/4-20	4
7.	123-0063	WASHER, 1/4 PLAIN	4
8.	123-0340	CARRIAGE BOLT 1/4-20 X 1/2	4
9.	84-103-05	BRACKET, WELDMENT R/H	2
10.	123-0093	CASTER ASSEMBLY	4
11.	84-103-07	VACUUM PUMP ASSEMBLY	1
12.	84-103-08	BRACKET, WELDMENT L/H	2
13.	123-0311	WASHER, PLASTIC	4
* 14.	84-103-10	VACUUM PUMP 220/50	1
* 15.	84-140-78	RELAY BOX 220/50	1
* 16.	123-0436	TRANSFORMER 220/50	1

*ITEMS 14, 15 and 16 ARE FOR 220 VOLT / 50 Hz.

GROUP 1A

GROUP 2

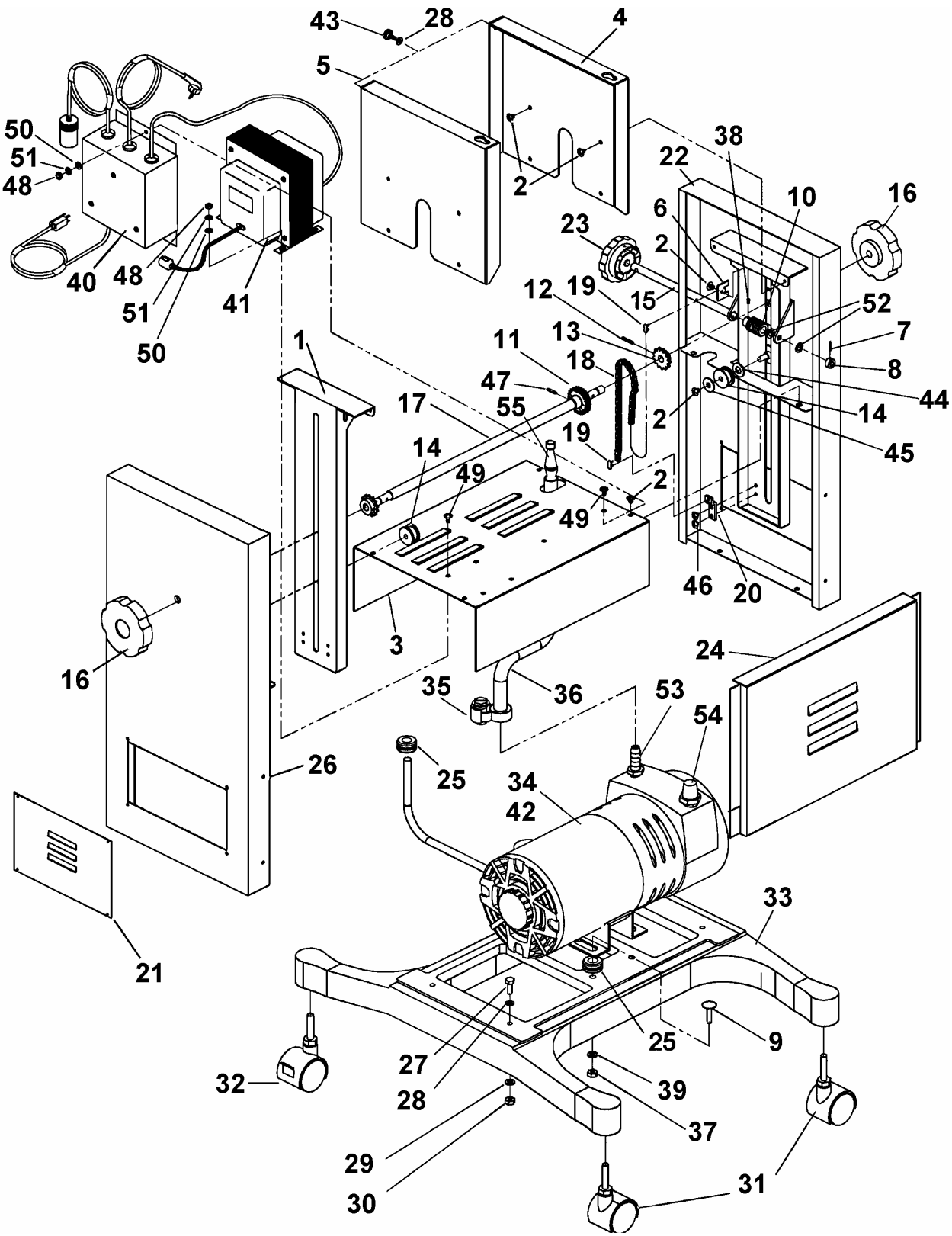

43
28
4
5
50
51
48
2
38
22
10
16
6
23
2
40
48
51
50
41
12
19
15
52
7
13
11
18
8
1
47
44
17
55
2
14
19
45
14
49
2
49
46
20
3
24
16
35
36
53
54
26
25
34
42
33
21
25
9
27
32
28
39
37
29
30
31

GROUP 2

KEY #	PART #	DESCRIPTION	QTY.
1.	156-102-18	ELEVATOR BRACKET (STANDARD)	2
1.	156-103-18	ELEVATOR BRACKET (LONG)	2
2.	123-0017	SCREW, 10-32X1/4 PHLPS TRUSS	32
3.	156-103-05	PANEL – BASE – PUMP COVER	1
4.	156-103-07	SIDE PLATE R/H	1
5.	156-103-06	SIDE PLATE L/H	1
6.	156-103-25	ELEVATOR BRACKET SUPPORT	2
7.	123-0695	SPRING PIN, 3/32 X 1/2	1
8.	156-103-27	COLLAR	1
9.	123-0841	CARRIAGE BOLT, 5/16 – 18 X 1	4
10.	156-103-12	HELIX ANGLE WORM	2
11.	156-103-11	WORM GEAR 20 TEETH	1
12.	123-0018	ROLL PIN 1/8 X 3/4 – BLACK	3
13.	156-103-08	SPROCKET 25B13	2
14.	156-103-09	IDLER PULLEY	2
15.	156-103-21	WORM SHAFT	1
16.	123-0135	KNOB	2
17.	156-103-20	DRIVE SHAFT	1
18.	156-103-26	CHAIN, TRANSMISSION ROLLER	2
19.	123-0200	CONNECTING LINK, CHAIN	4
20.	156-103-23	ELEVATOR BRACKET SUPPORT	2
21.	86-103-04	COVER, SIDE PANEL	2
22.	156-103-03	SIDE PANEL L/H	2
23.	123-0293	KNOB, HEIGHT ADJUSTMENT	1
24.	86-103-06	PUMP COVER, STAND	2
25.	123-0707	RUBBER GROMMET 1/2ID X 3/4OD	1
26.	156-103-04	SIDE PANEL R/H	1
27.	123-0143	SCREW, HEX 1/4-20 X 5/8	4
28.	123-0063	WASHER, 1/4 PLAIN-MOTOR & PUMP	8
29.	123-0064	WASHER, LOCK 1/4	8
30.	123-0054	NUT, HEX 1/4-20	8
31.	123-0517	CASTER, NON LOCKING	2
32.	123-0521	CASTER, LOCKING	2
33.	86-103-31	BASE WELDMENT	1
34.	84-103-07	VACUUM PUMP ASSEMBLY, 115 V	1
35.	123-0131	CLAMP, HOSE	1
36.	84-106-41	HOSE, PUMP 19” LONG	1
37.	123-0051	NUT, 5/16-18 HEX	4
38.	123-0757	SCREW,SET 6-23 X 1/4 STD CUP PT	4
39.	123-0855	WASHER, 5/16 LOCKING	4
* 40.	84-140-78	RELAY BOX 220V / 50 Hz	1
* 41.	123-0436	TRANSFORMER, 220V / 50 Hz	1
* 42.	84-103-10	VACUUM PUMP, 220V / 50 Hz	1
43.	56-108-22	THUMBSCREW	1
44.	123-0096	WASHER, PLASTIC 3/8 X 3/4 X 1/16	2
45.	123-0311	WASHER, 9/32 X 3/4 X 1/16 PLASTIC	2
46.	123-0701	SCREW, 10-32 X 3/16 PH TRUSS HD	4
47.	123-0034	ROLL PIN, 1/8 X 5/8	1
*48.	123-0050	NUT, 10-32 X 5/16 HEX ZINC	6
*49.	123-0024	SCREW, 10-32 X 3/8 PH TRUSS HD MS ZINC	6
*50.	123-0237	WASHER, STAR #10 EXTERNAL	6
*51.	123-0262	WASHER #10 3/16 X 3/8 X .032	6
52.	123-0312	WASHER, 5/16 X 1/2 X .030 PLASTIC	2
53.	123-0145	FITTING	1
54.	123-1936	FILTER/MUFFLER	1
55.	123-0325	HOSE COUPLING	1
**	K247	SERVICE KIT, OLD STYLE PUMP	
**	K478	SERVICE KIT, NEW STYLE PUMP	
**	AK524	FELT, NEW STYLE PUMP ONLY	

* 220V/0HZ ONLY **PARTS NOT SHOWN

GROUP 3

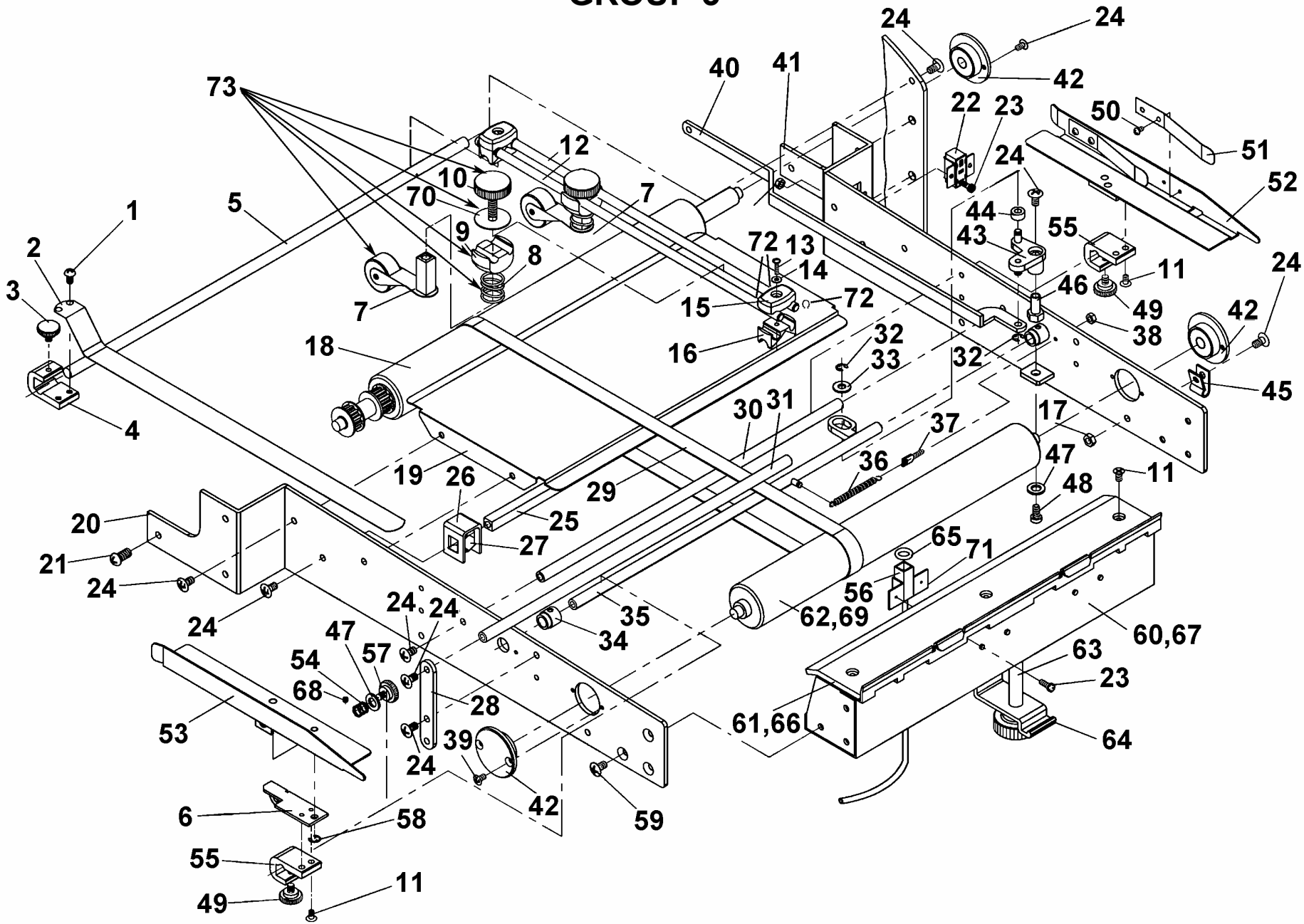

73
1
2
3
4
5
6
7
8
9
10
11
12
13
14
15
16
17
18
19
20
21
22
23
24
25
26
27
28
29
30
31
32
33
34
35
36
37
38
39
40
41
42
43
44
45
46
47
48
49
50
51
52
53
54
55
56
57
58
59
60,67
61,66
62,69
63
64
65
68
70
71
72

KEY #	PART #	DESCRIPTION	QTY.
1.	123-0125	SCREW 8-32 X 3/16, BIN HD, PHIL	4
2.	84-125-107	STRAP, PAPER RETAINER	2
3.	71-109-07	THUMBSCREW ASSEMBLY	2
4.	71-125-21	CLAMP, RETAINER STRAP	2
5.	84-101-31	ROD, REAR SKID WHEEL SUPPORT	1
6.	56-114-06	BRACKET-GUIDE, R/H	1
7.	71-125-17	SKID ROLLER ASSEMBLY, SHORT	2
7.	86-125-46	SKID ROLLER ASSEMBLY LONG	1
8.	71-120-06	SPRING, SKID WHEEL	2
9.	71-125-46	POST BRACKET	2
10.	71-125-48	ADJUSTING SCREW ASSEMBLY	2
11.	123-0446	SCREW, 8-32 X 5/16	7
12.	71-125-47E	ROD, SKID WHEEL	2
13.	123-0241	SCREW, 4-40 X 7/16, BIN HD, PHIL	2
14.	123-0345	WASHER, PLAIN	2
15.	71-125-37A	PLATE, SKID WHEEL CLAMP	2
16.	71-125-84	CLAMP ASSEMBLY, SKID WHEEL	2
17.	123-0050	NUT, 10-32 X 5/16 HEX, ZINC	2
18.	84-101-17	ROLLER ASSEMBLY, REAR	1
19.	84-101-07	CENTER PLATE, CONVEYOR	1
20.	84-101-20B	FRAME, CONVEYOR R/H	1
21.	123-0276	SCREW, 1/4-20 X 1/2	6
22.	84-140-71	WIRE HARNESS, DUAL STREAM	1
23.	123-0280	SCREW, 6-32 X 3/8	2
24.	123-0024	SCREW, 10-32 X 3/8, TRUSS PHIL.	44
25.	84-101-29	ROD, TAPE GUIDE	1
26.	71-130-13	TAPE GUIDE, CONVEYOR	6
27.	71-130-15	SPRING, TAPE GUIDE	6
28.	84-101-24	BRACKET-FRONT SKID WHEEL ROD	2
29.	123-0107	TAPE, CONVEYOR	6
30.	84-101-26	ROD, CONVEYOR REAR TIE	1
31.	84-101-19	ROD, FRONT SKID WHEEL	1
32.	123-0080	TRUARC	2
33.	123-0100	WASHER 1/2 X .218 X .048 THICK	1
34.	80-112-06	BUSHING, JOGGER ROD	2
35.	84-101-25	JOGGER ROD ASSEMBLY	1
36.	80-120-25	SPRING, JOGGER	1
37.	123-0358	ANCHOR, JOGGER SPRING	1
38.	123-0192	NUT, 6-32 HEX	3
39.	123-0275	SCREW, OVAL CSK PH. 6-32X1/4	4
40.	84-101-27	LINK JOGGER CONNECTING	1
41.	84-101-12	FRAME, CONVEYOR L/H	1
42.	84-121-12	BEARING CAP ASSEMBLY	2
43.	80-112-03A	JOGGER LEVER ASSEMBLY	1
44.	80-112-21	JOGGER LEVER BUSHING	1
45.	123-0339	CLAMP, WIRE 3/16	2
46.	80-112-04	PIVOT, JOGGER LEVER	1
47.	123-0523	WASHER, 14 X 1/ X .032	2
48.	123-0185	SCREW, 10-32 X 3/8 SOCKET CAP	1
49.	71-109-07	THUMBSCREW ASSEMBLY	2
50.	123-0127	SCREW, 6-32 X 1/8	4
51.	84-114-12	SPRING, SIDE GUIDE L/H	2
* 52.	56-114-12	BODY L/H SIDE GUIDE ASSY.	1
* 53.	56-114-05	BODY R/H SIDE GUIDE ASSY.	1
54.	84-120-05	SPRING, COMPRESSION	1
55.	56-114-17	CLAMP-GUIDE	2
56.	84-150-25	PHOTOSENSOR ASSEMBLY	1
57.	84-114-05	SCREW, R/H SIDE GUIDE ADJUSTING	1
58.	123-0099	TRUARC	1
59.	123-0017	SCREW, 10-32 X 1/4	10
60.	84-101-15	FRONT FEED PLATE ASSEMBLY	1
61.	84-101-10	PAD, FRONT FEED PLATE	1
62.	84-101-02	ROLLER ASSEMBLY, FRONT	1
63.	84-101-16	SCREW, ASSEMBLY, FRONT CLAMP	1
64.	84-101-14	CLAMP, AB DICK FRONT PLATE	1
65.	123-0472	O-RING, PHOTOSENSOR	1
** 66.	84-101-10W	PAD, FRONT FEED PLATE WIDE	1
** 67.	84-101-15W	FRONT FEED PLATE ASSEMBLY, WIDE	1
68.	123-0431	SCREW, SET 6-32 X 1/8 NYLON	1
69.	84-101-02W	FRONT CONVEYOR ROLLER – WIDE	1
70.	123-0240	WASHER, PLAIN 7/8 X 17/64 X .032	2
71.	84-140-22	CLAMP - PHOTOCELL MTG.	1
72.	123-0257	TRUARC	4
73.	71-125-200	SKID ROLLER ASSEMBLY. CONSISTS OF KEYS # 7, 8, 9, 10, AND 70	2

* SEE GROUP 10 FOR ASSEMBLY

** REPLACEMENT FOR S/N 1149 AND BELOW.

GROUP 3

GROUP 4

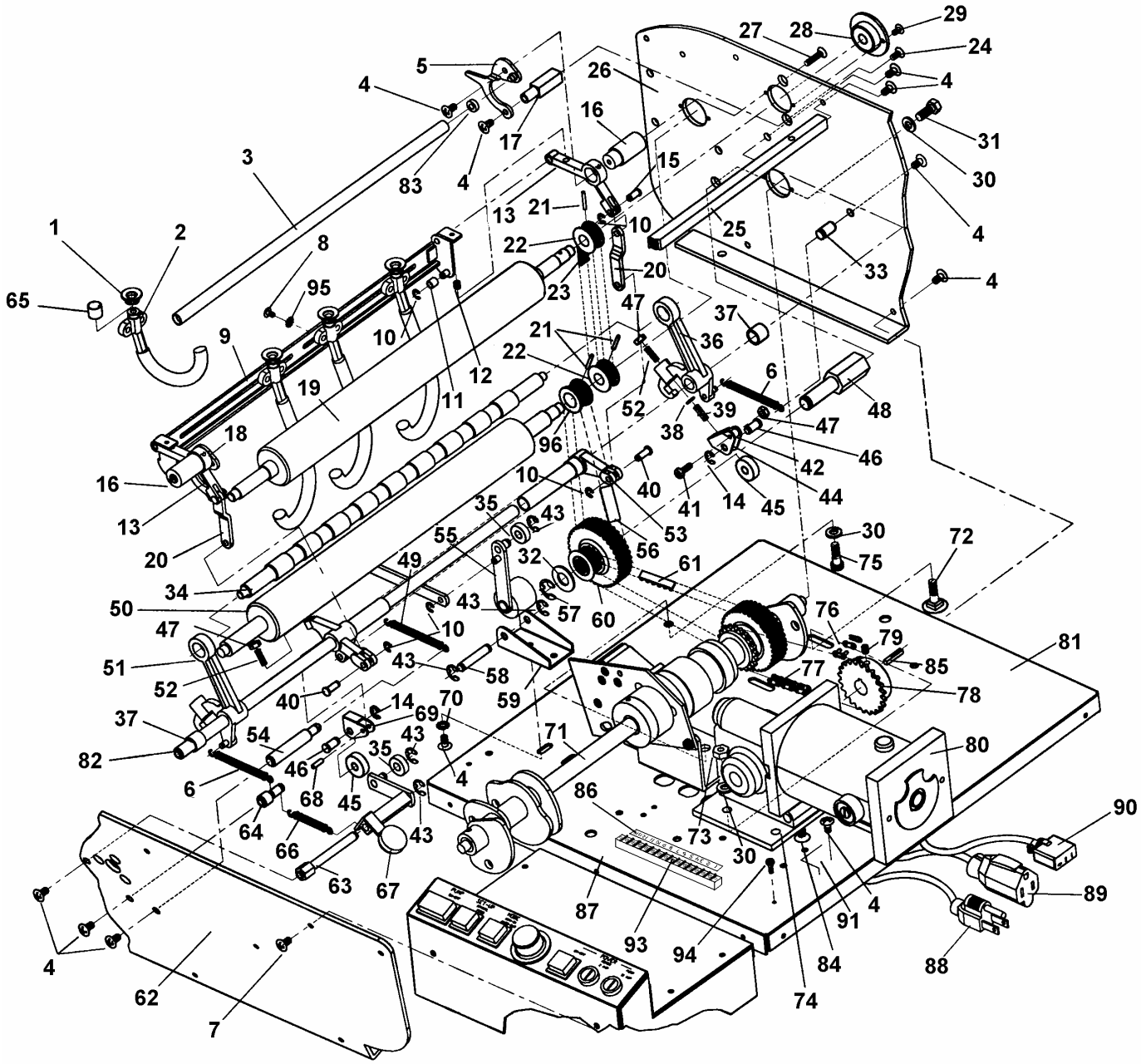
1
2
3
4
5
6
7
8
9
10
11
12
13
14
15
16
17
18
19
20
21
22
23
24
25
26
27
28
29
30
31
32
33
34
35
36
37
38
39
40
41
42
43
44
45
46
47
48
49
50
51
52
53
54
55
56
57
58
59
60
61
62
63
64
65
66
67
68
69
70
71
72
73
74
75
76
77
78
79
80
81
82
83
84
85
86
87
88
89
90
91
93
94
95
96

KEY #	PART #	DESCRIPTION	QTY.
1.	71-134-15	SUCTION CUP	4
2.	84-105-22	FITTING ASSEMBLY, SUCTION CUP	4
3.	84-105-35	IDLER ROLLER ASSEMBLY	1
4.	123-0024	SCREW, PHILLIPS TRUSS 10-32 X 3/8	23
5.	84-105-30	CAM ASSEMBLY, SUCTION CUP R/H	1
6.	84-120-10	SPRING, UPPER PULLOUT ROLLER	2
7.	123-0017	SCREW, 10-32 X 1/4	3
8.	123-0274	SCREW, TRUSS HEAD PH 6-32 X 3/8	8
9.	84-105-08	CARRIAGE WELDMENT, SUCTION CUP	1
10.	123-0080	TRUARC	2
11.*****	74-105-12	BEARING, ROLLER ASSEMBLY	2
12.	71-120-09	SPRING, CARRIAGE TILT	2
13.	84-105-36	ARM, SUCTION BAR	3
14.****	123-0423	TRUARC	3
15.	71-121-03	PIN, SHORT LINK	2
16.	84-105-01	PIVOT, SUCTION CUP LEVER	2
17.	84-105-37	POST, SUCTION CUP CAM	2
18.	84-105-31	CAM ASSEMBLY, SUCTION CUP L/H	1
19.	84-115-20	RUBBER ROLLER ASSEMBLY	1
20.	84-117-11	LINK, SUCTION CUP ARM	2
21.	123-0036	ROLL PIN, 3/32 X 5/8	3
22.	71-122-06	PULLEY – PLASTIC, 12XLO.312	3
23.	123-0277	BELT, TIMING 110XLO31	1
24.	123-0002	SCREW, 10-32 X 3/8	2
25.	84-106-28	HOSE SUPPORT WELDMENT	1
26.	84-100-02B	FRAME, R/H SIDE	1
27.	123-0003	SCREW, 10-32 X 3/4	2
28.	84-121-12	BEARING CAP ASSEMBLY	6
29.	123-0275	SCREW, 6-32 X 1/4	12
30.	123-0064	WASHER, LOCK 1/4	7
31.	123-0143	SCREW, 1/4-20 X 5/8	1
32.	123-0399	WASHER, 7/16 X 7/8 X 1/16	1
33.	71-121-05	PIN, PULLOUT ROLLER SPRING	1
34.	84-107-06	ROLLER, UPPER PULLOUT	1
35.****	123-0035	BEARING	2
36.***	84-107-08	LEVER ASSY R/H, PULLOUT ROLLER	1
37.	84-102-10	SPACER, OSCILLATING TUBE	2
38.****	123-0375	WASHER, 5/16 X 1/8 X 1/32	2
*39.****	84-120-26A	SPRING, PULL OUT ROLLER ARM	2
*39.****	84-120-26B	SPRING, PULL OUT ROLLER ARM	
40.	71-121-06	PIN, LONG LINK	2
41.****	123-0008	SCREW, PHILLIPS BUTTON-HEAD 10-32X1/2	2
42.	84-107-14	BUSHING, PULL OUT ROLLER LEVER	2
43.	123-0081	TRUARC	5
44.****	84-107-13	HOUSING, PULL OUT ROLLER CAM FOLLOWER	2
45.****	123-0371	BEARING	3
46.****	84-107-12	PIVOT, PULL OUT ROLLER ARM	3
47.****	123-0050	NUT, 10-32 X 5/16 HEX, ZINC	5
48.	84-100-54	STUD, DOUBLE PULLEY	1
49.	84-120-10	SPRING, UPPER PULLOUT ROLLER	1
50.	84-101-17	ROLLER, REAR CONVEYOR ASSEMBLY	1
51.***	84-107-09	LEVER, PULLOUT ROLLER ASSEMBLY, L/H	1
52.	123-0374	SCREW,, SET-SOC. HD 10-32 X 1/2	3
53.	84-104-00	OSCILLATING TUBE	1
54.	84-121-18	PIN, SUCTION CUP SPRING	1
55.	84-101-41	WELDMENT, JOGGER CAM FOLLOWER	1
56.	123-0338	BELT, TIMING 100 XLO37	1
57.	123-0398	TRUARC	1
58.	84-101-46	PIN, JOGGER CAM FOLLOWER ARM	1
59.	84-101-45	BRACKET, JOGGER CAM FOLLOWER ARM	1
60.	84-122-25	PULLEY COMBINATION ASSEMBLY	1
61.	123-0140	BELT TIMING 110 XLO37	1
62.	84-100-01B	FRAME, L/H SIDE	1
63.	84-106-19	PIVOT, VACUUM VALVE STOPPER	1
64.	84-106-20	PIN, VACUUM VALVE SPRING	1
65.	123-0415	SUCTION FOOT VACUUM CAP	4
66.	71-120-01	SPRING, MAIN	1
67.	84-106-11	VACUUM VALVE ARM ASSEMBLY	1
68.	123-0387	ROLL PIN, 1/8 X 7/16	1
69.	84-104-06	HOUSING, OSCILLATING TUBE CAM FOLLOWER	1
70.	123-0237	WASHER, #10 STAR	1
71.	84-128-08	CAM SHAFT ASSEMBLY	1
72.	123-0471	CARRIAGE BOLT, 1/4-20	4
73.	123-0054	NUT, HEX 1/4-20	2
74.	80-100-34	PLATE, MOTOR MOUNTING	1
75.	123-0182	SCREW, SOC. CAP HEAD 1/4-20 X 3/4	2
76, 77	84-128-21	CHAIN AND CONNECTING LINK ASSEMBLY	1
78.	84-122-22	SPROCKET 22 TEETH	1
79.	123-0001	SET SCREW, 10-32 X 1/4	
80.	123-0082C	MOTOR	1
81.	84-100-62	MOTOR BASE	1
82.	84-104-07	SHAFT, OSCILLATING TUBE	1
83.	123-0077	BEARING, IDLER ROLLER	1
84.	123-0263	SCREW, 1/4-20 X 5/8	2
85.	123-0497	KEY, 1/8 X 1/8 X 3/4	4
86.	123-0558	LABEL	1
87.	84-140-73	WIRE HARNESS, SOLENOID	1
88.	84-140-74	POWER CORD	1
89.	84-140-75	POWER CORD RECEPTACLE, PUMP	1
90.	84-140-72	HARNESS, TIMING CABLE ASSEMBLY	1
91.	123-0196	WIRE CLAMP	1
92.	123-0394	GROMMET	3
93.	123-0350	TERMINAL BLOCK	1
94.	123-0280	SCREW, 6-32 X 3/8	1
95.	123-0252	WASHER, #6 STAR	2
96.	84-101-18	PULLEY, 12XLO	8
**	123-0236R	MOTOR BRUSHES	1

*BOTH SPRINGS MUST BE ORDERED B FITS INSIDE A
**NOT SHOWN IN ILLUSTRATION

*** Parts marked with **** are included with 84-107-09 and 84-107-08
***** For S/N 1695 and lower, change rollers on both sides of carriage.

GROUP 4

GROUP 5

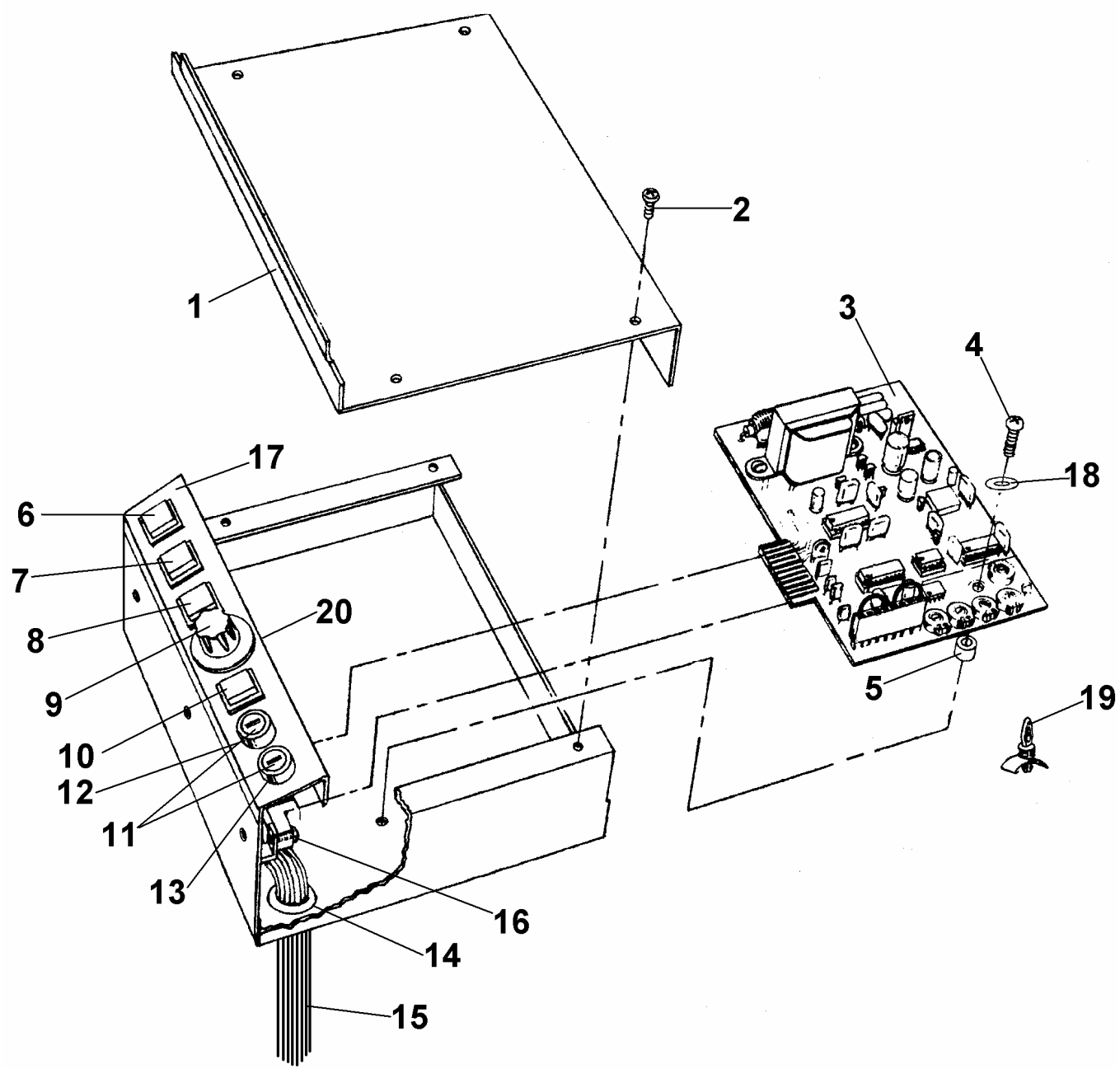

KEY #	PART #	DESCRIPTION	QTY.
1.	84-140-66	COVER, CONTROL BOX	1
2.	123-0125	SCREW, 8-32 X 3/16 PHILLIPS	4
3.	84-100-100	PC BOARD AB DICK, CONSOLE	1
3.	84-100-001	PC BOARD HAMADA 601, 602	1
3.	84-100-002	PC BOARD RYOBI 2700, 2800, 3200, ITEK 960, 975, 985	1
3.	84-100-003	PC BOARD MULTI 1218, TOKO 4700, 4700CD	1
3.	84-100-004	PC BOARD MULTI 1250, 1300, 1650	1
3.	84-100-005	PC BOARD RYOBI 3302, ITEK 3985	1
3.	84-100-006	PC BOARD HAMADA 500, 600, 660, 665	1
3.	84-100-008	PC BOARD HAMADA 611, 612, 661, 662	1
3.	84-100-012	PC BOARD HAMADA 47	1
3.	84-100-014	PC BOARD HEIDELBERG QUICKMASTER	1
3.	84-100-015	PC BOARD HAMADA H234	1
3.	84-100-016	PC BOARD HAMADA RS34, VS34	1
3.	84-100-017	PC BOARD HEIDELBERG PRINTMASTER	1
3.	84-100-018	PC BOARD ABDICK 9920	1
4.	123-0229	SCREW, 8-32 X 5/8	2
5.	123-0299	SPACER, PLASTIC	2
6.	123-0450	SWITCH, PUMP (FOR S/N 1223 & UP)	1
6.	123-0352	SWITCH, PUMP (FOR S/N 1000-1222)	1
7.	123-0354	SWITCH, MANUAL (BLACK)	1
8.	123-0353	SWITCH, MODE (BLACK)	1
9.	123-0390	KNOB, SPEED CONTROL	1
10.	123-0351	SWITCH, ON/OFF (RED)	1
11.	123-0355	FUSE HOLDER	2
12.	123-0285	FUSE, 2 AMP FAST BLOW	1
13.	123-0090	FUSE, 10 AMP SLO BLO	1
14.	123-0377	GROMMET	1
15.	84-140-70	WIRE HARNESS ASSEMBLY	1
16.	123-0241	SCREW, 4-40 X 7/16	2
17.	123-0408	DECAL, CONTROL PANEL	1
18.	123-0114	PLASTIC WASHER	2
19.	123-0426	SUPPORT, PC BOARD	2
20.	84-140-70P	POTENTIOMETER, SPEED CONTROL (50k)	1

GROUP 5

GROUP 6

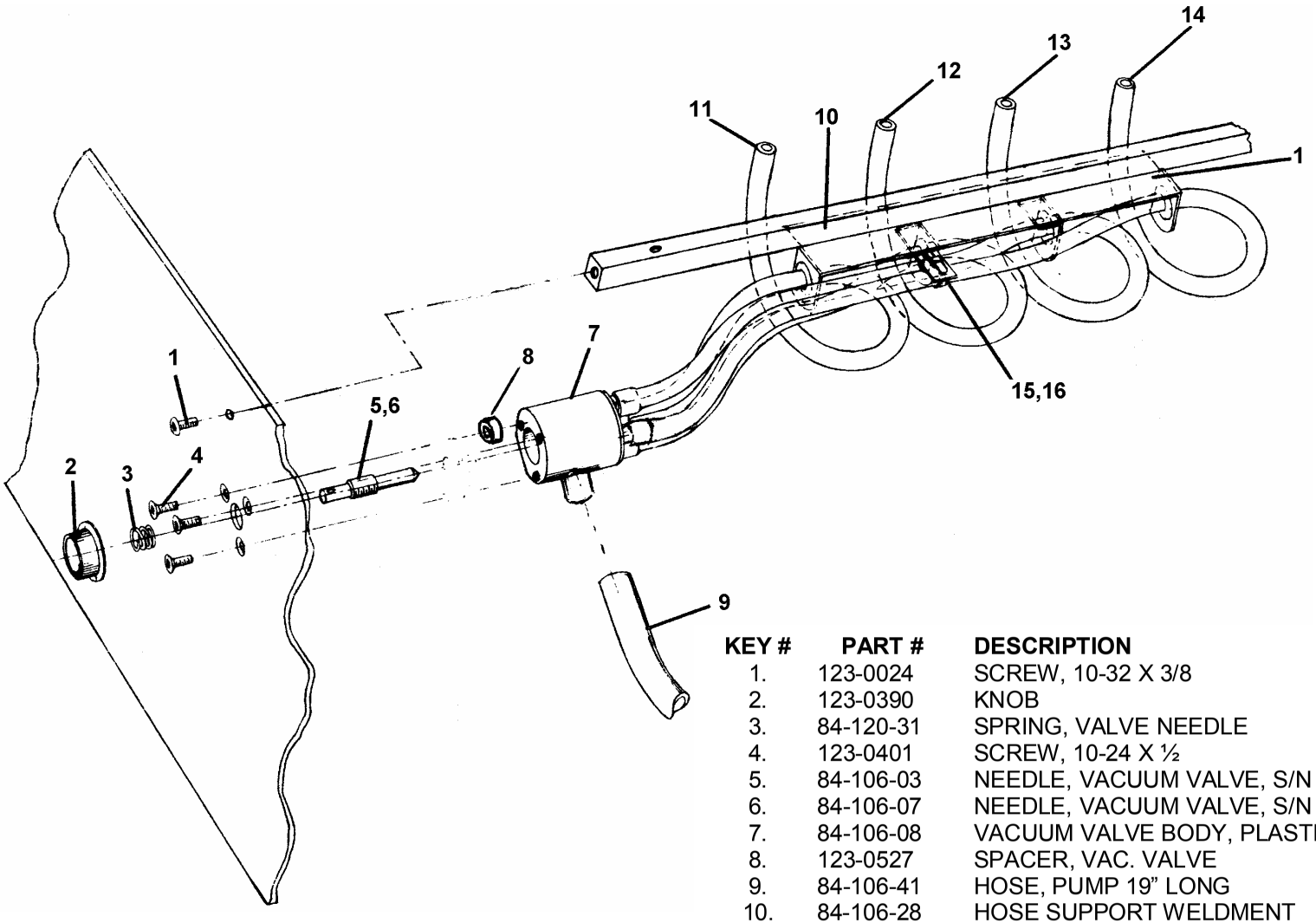

KEY #	PART #	DESCRIPTION	QTY.
1.	123-0024	SCREW, 10-32 X 3/8	2
2.	123-0390	KNOB	1
3.	84-120-31	SPRING, VALVE NEEDLE	1
4.	123-0401	SCREW, 10-24 X ½	3
5.	84-106-03	NEEDLE, VACUUM VALVE, S/N 2392 AND LOWER	1
6.	84-106-07	NEEDLE, VACUUM VALVE, S/N 2393 AND HIGHER	1
7.	84-106-08	VACUUM VALVE BODY, PLASTIC	1
8.	123-0527	SPACER, VAC. VALVE	3
9.	84-106-41	HOSE, PUMP 19” LONG	1
10.	84-106-28	HOSE SUPPORT WELDMENT	1
11.	84-106-40A	HOSE, SUCTION CUP 10 ¼ INCH	1
12.	84-106-40B	HOSE, SUCTION CUP 13 ¼ INCH	1
13.	84-106-40C	HOSE, SUCTION CUP 15 ½ INCH	1
14.	84-106-40D	HOSE, SUCTION CUP 16 ¾ INCH	1
15.	123-0092	GROMMET, 11/32	4
16.	123-0113	PLASTIC TIE	1

GROUP 7

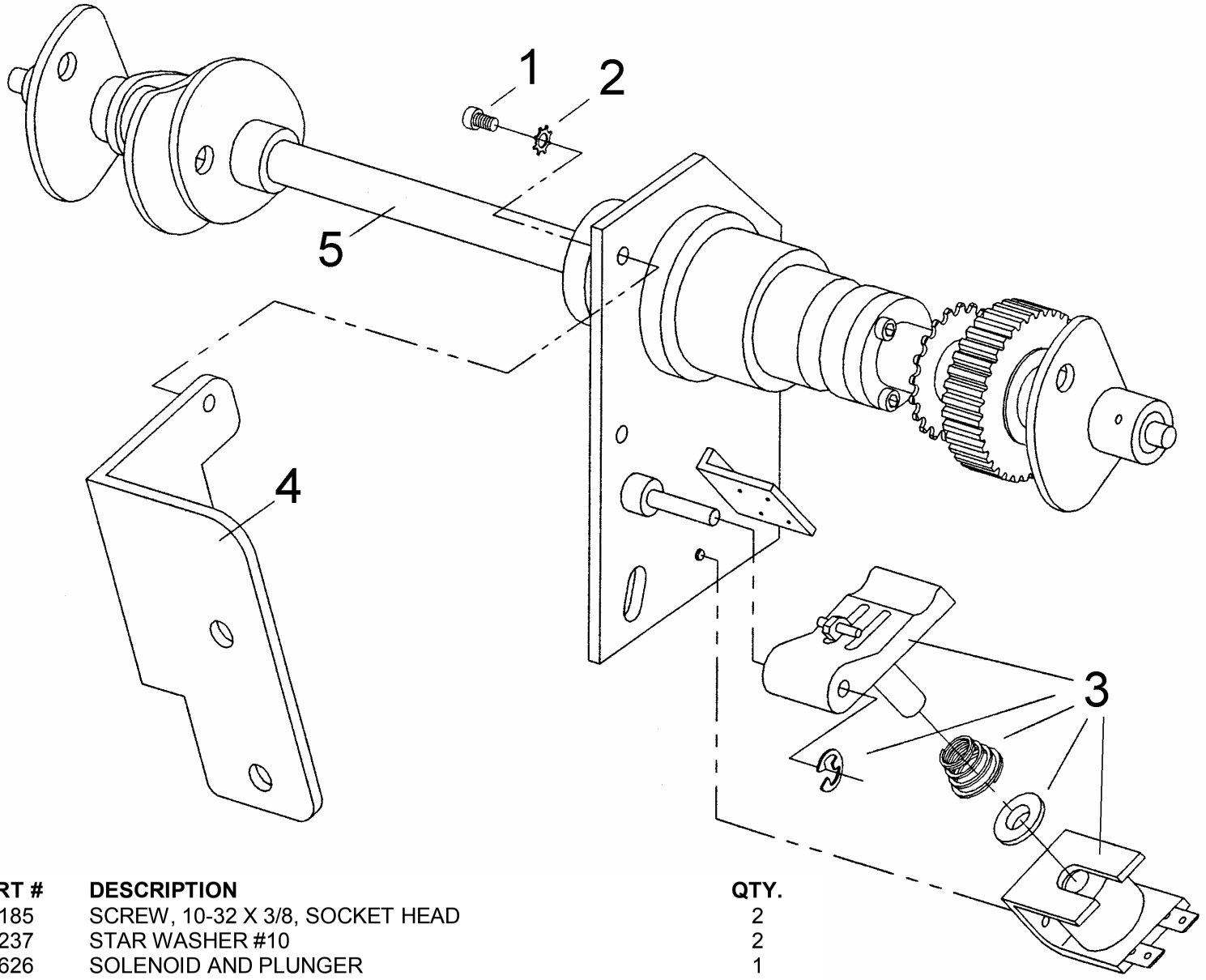

KEY #	PART #	DESCRIPTION	QTY.
1.	123-0185	SCREW, 10-32 X 3/8, SOCKET HEAD	2
2.	123-0237	STAR WASHER #10	2
3.	123-1626	SOLENOID AND PLUNGER	1
4.	84-128-80	CLUTCH MOUNTING BRACKET	1
5.	84-128-08	CLUTCH ASSEMBLY (INCLUDES ALL PARTS ABOVE)	

GROUP 8

KEY	PART NUMBER	DESCRIPTION	QTY
1.	84-100-82	PAPER BOARD STOP	1
2.	84-140-01	MOUNTING PLATE WELDMENT	1
3.	123-0274	SCREW, TRUSS HEAD PH 6-32 X 3/8	2
4.	84-140-13	P.C. BOARD ASSY PULSE GENERATOR	1
5.	84-140-07	GEAR ASSEMBLY, MAGNETIC DRIVE, AB DICK	1
6.	123-0076	BUSHING, BRONZE 1/4 X 3/8	2
7.	123-0081	TRUARC, 5133-25	1
8.	123-0063	WASHER, 1/4 PLAIN	1
9.	84-101-51	BRACKET, PRESS SIDE GUIDE	1
10.	84-101-49	NUT, PRESS SIDE GUIDE STOP	1
11.	123-0311	WASHER, 9/32 X 3/4 X 1/16 PLASTIC	2
12.	84-140-00	PULSE GENERATOR ASSEMBLY	1
13.	123-0194	PLUG, 3-PRONG MALE	1
*	123-0195	PLUG 3-PRONG FEMALE	1

* NOT SHOWN

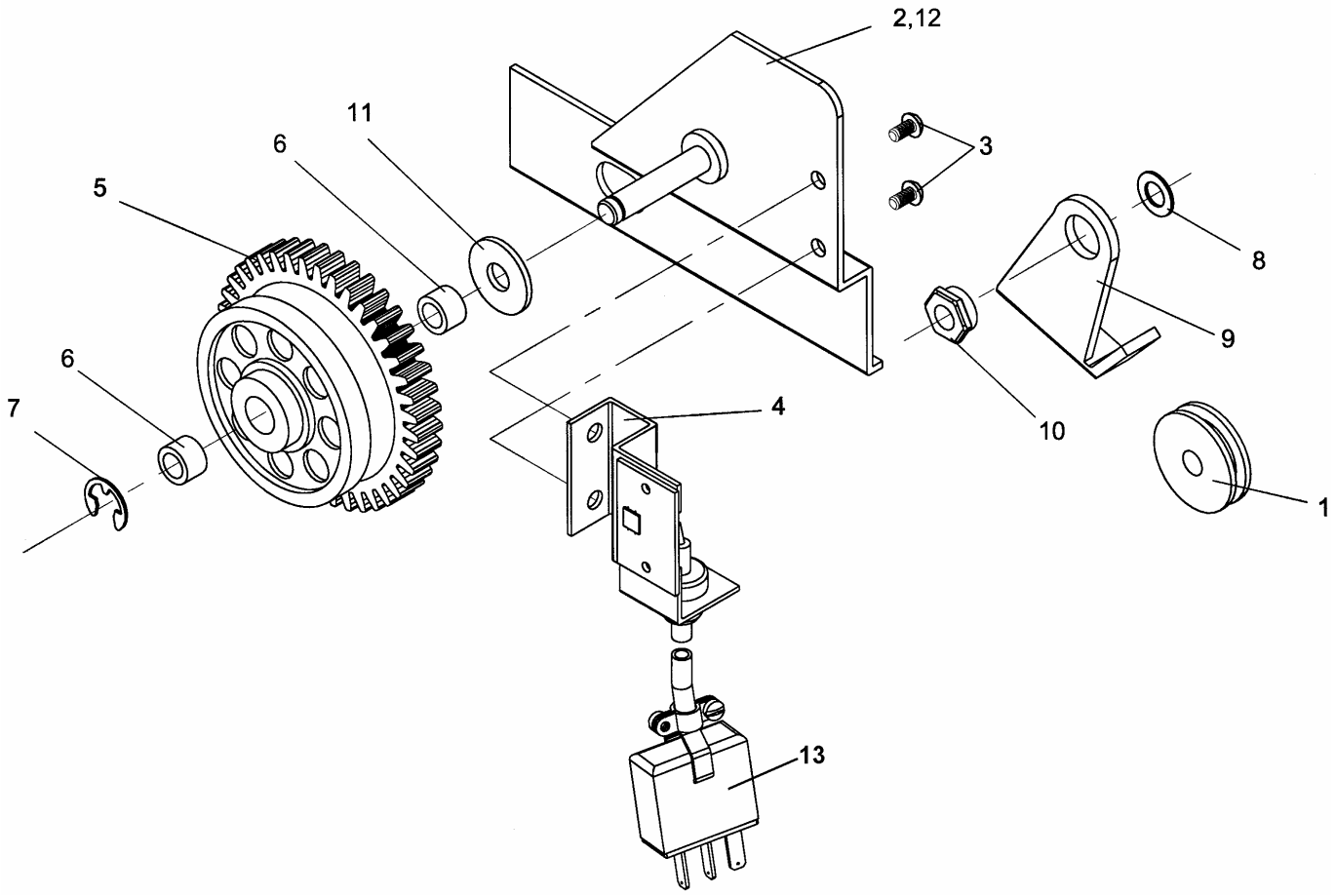

GROUP 9

REPLACEMENT PARTS FOR AB DICK CONVERSION KIT A-201

KEY	PART NUMBER	DESCRIPTION	QTY
*1.	84-100-82	PAPER BOARD STOP	1
2.	84-140-01	MOUNTING PLATE WELDMENT	1
3.	123-0274	SCREW, TRUSS HEAD PH 6-32 X 3/8	2
4.	84-140-13	P.C. BOARD ASSY PULSE GENERATOR	1
5.	84-140-07	GEAR ASSEMBLY, MAGNETIC DRIVE	1
6.	123-0076	BUSHING, BRONZE 1/4 X 3/8	2
7.	123-0081	TRUARC, 5133-25	1
*8.	123-0063	WASHER, 1/4 PLAIN	1
*9.	84-101-51	BRACKET, PRESS SIDE GUIDE	1
*10.	84-101-49	NUT, PRESS SIDE GUIDE STOP	1
11.	123-0311	WASHER, 9/32 X 3/4 X 1/16 PLASTIC	2
*12.	84-140-00	PULSE GENERATOR ASSEMBLY	1
13.	84-101-15	FRONT FEED PLATE ASSEMBLY	1
14.	84-101-10	PAD, FRONT FEED PLATE	1
15.	123-0446	SCREW, 8-32 X 5/16	1
16.	84-101-14	CLAMP, AB DICK FRONT PLATE	1
17.	84-101-16	SCREW, ASSEMBLY, FRONT CLAMP	1
18.	84-140-77	JUMPER PLUG, AB DICK	1
*19.	123-0113	PLASTIC TIES	4

* REPLACEMENT PARTS FOR AB DICK AUXILIARY INSTALLATION KIT A-202

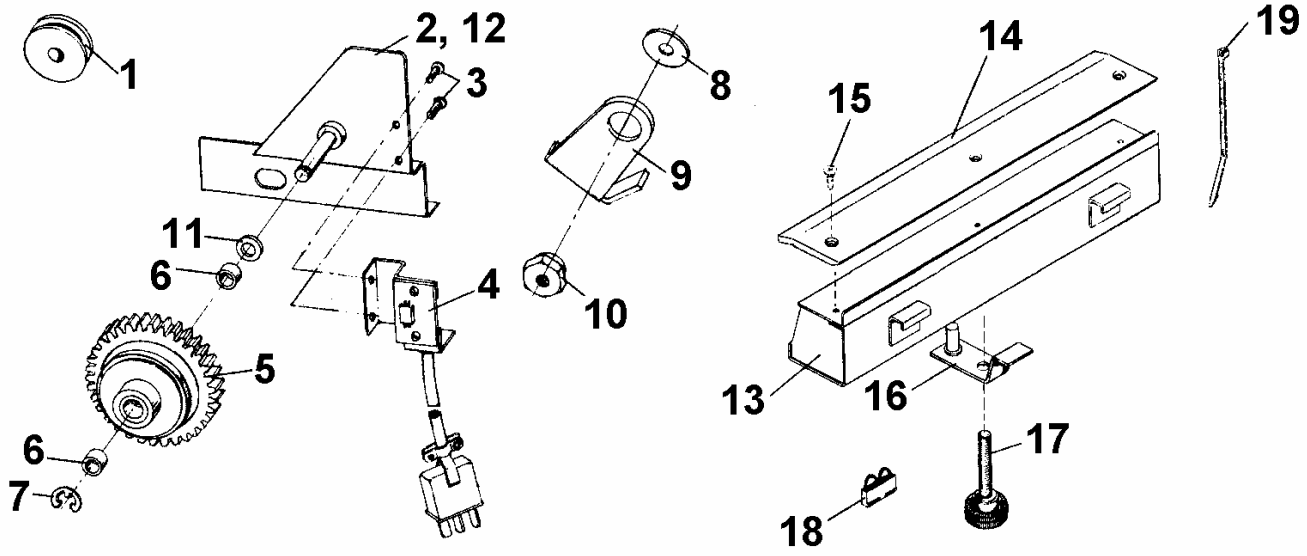

GROUP 10

REPLACEMENT PARTS FOR DUAL STREAM FEED KIT

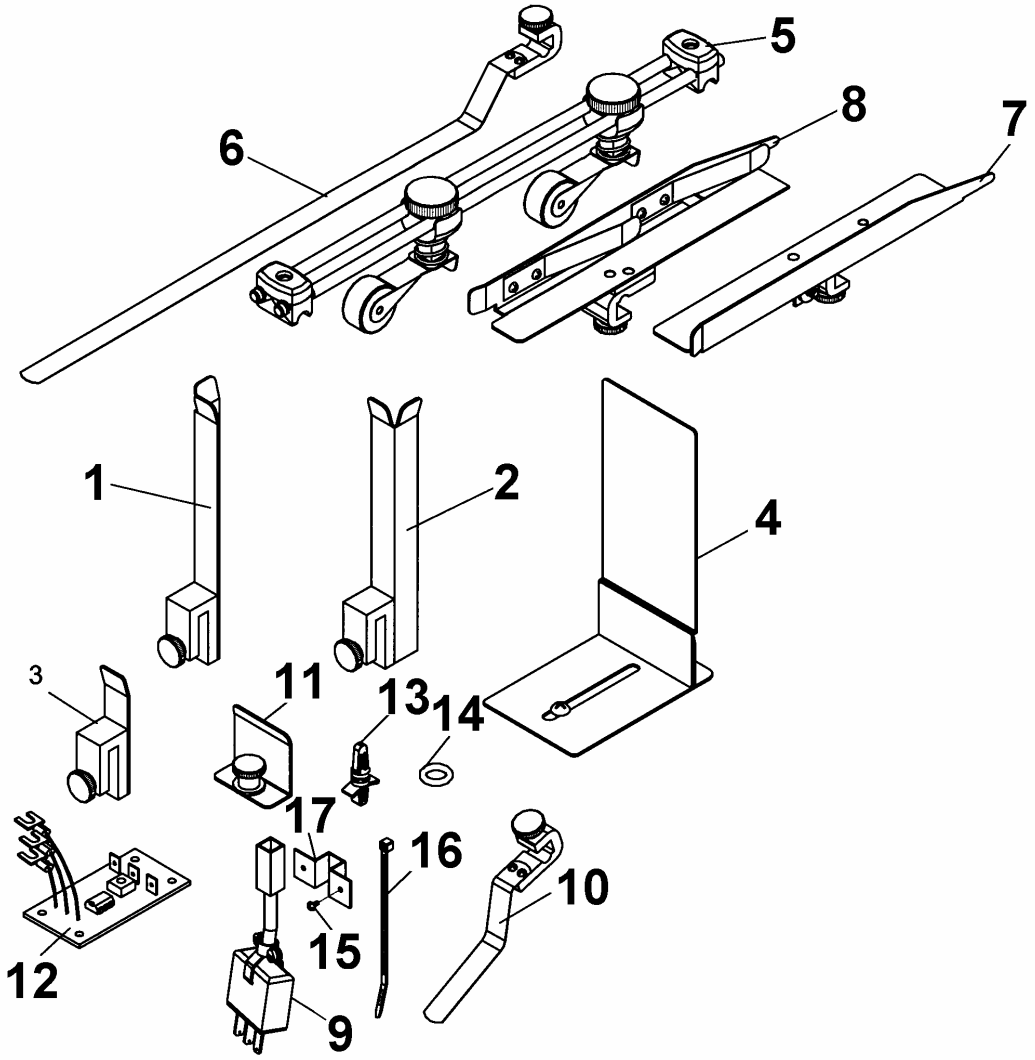

KEY #	PART #	DESCRIPTION	QTY.
1.	71-140-08	FRONT R/H ENVELOPE GUIDE ASSEMBLY	1
2.	71-140-10	FRONT L/H ENVELOPE GUIDE ASSEMBLY	1
3.	71-140-13	CENTER GUIDE ASSEMBLY	1
4.	84-108-20	REAR ENVELOPE GUIDE ASSEMBLY	1
5.	84-130-20	SKID WHEEL ASSEMBLY	1
6.	84-125-108	RETAINER STRAP ASSEMBLY	2
7.	56-114-03	SIDE GUIDE ASSEMBLY R/H	1
8.	56-114-04	SIDE GUIDE ASSEMBLY L/H	1
9.	84-140-20	PHOTOSENSOR, DUAL STREAM	1
10.	84-125-110	FRONT RETAINER STRAP ASSEMBLY	1
11.	84-100-15	GUIDE ASSEMBLY, ANTI SKEWING	2
12.	84-140-12	P.C. BOARD, DUAL STREAM	1
13.	123-0426	SUPPORT, P.C. BOARD	4
14.	123-0472	O-RING, PHOTOSENSOR	1
15.	123-0280	SCREW, 6-32 X 3/8	2
16.	123-0113	PLASTIC TIES	1
17.	84-140-22	CLAMP – PHOTOCELL MTG.	1

GROUP 11

REPLACEMENT PARTS FOR HAMADA 500, 600, 660, AND 665
CONVERSION KIT A-213

KEY	PART NUMBER	DESCRIPTION	QTY
1.	89-101-15	WELDMENT, FRONT FEED PLATE	1
2.	87-101-10	PAD, FRONT FEED PLATE	1
3.	123-0446	SCREW	3
4.	89-101-14	CLAMP, FRONT FEED PLATE	1
5.	87-101-39	SLEEVE, CLAMP SCREW	1
6.	87-101-16	SCREW ASSEMBLY, CLAMP	1
*7.	123-0113	PLASTIC TIES	4
*8.	89-100-82	PAPER BOARD STOP	1
*9.	89-140-100	PULSE GENERATOR ASSEMBLY	1
10.	89-140-101	SENSOR BRACKET	1
11.	89-140-113	SENSOR ASSEMBLY	1
12.	123-0274	SCREW, 6-32	2
13.	123-0252	WASHER, STAR #6	2
14.	89-140-107	MAGNET ASSEMBLY	1
15.	123-0311	WASHER, PLASTIC	1
16.	123-0081	TRUARC	1
17.	89-140-77	JUMPER PLUG – HAMADA	1

* REPLACEMENT PARTS FOR HAMADA 600 AUXILIARY INSTALLATION KIT A-214

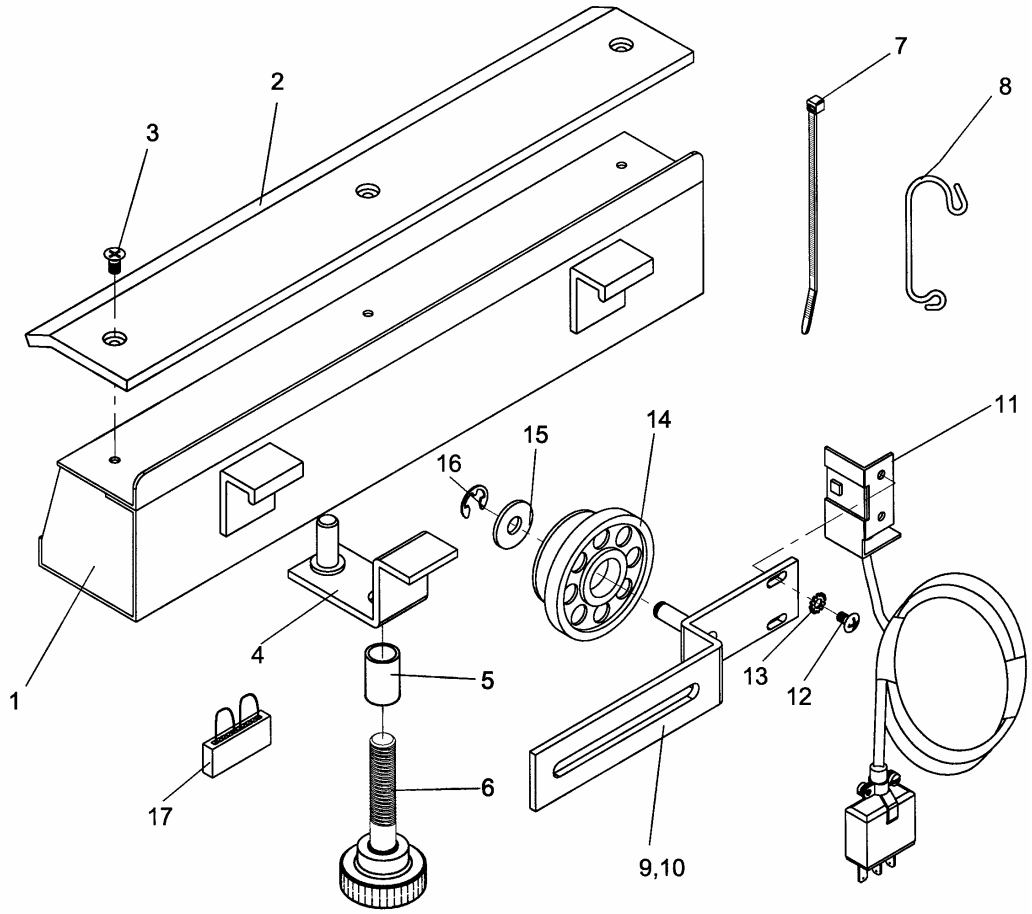

GROUP 12

REPLACEMENT PARTS FOR HAMADA 601/602 CONVERSION KIT A-204

KEY	PART NUMBER	DESCRIPTION	QTY
1.	89-101-15	WELDMENT, FRONT FEED PLATE	1
2.	87-101-10	PAD, FRONT FEED PLATE	1
3.	123-0446	SCREW	3
4.	89-101-14	CLAMP, FRONT FEED PLATE	1
5.	87-101-39	SLEEVE, CLAMP SCREW	1
6.	87-101-16	SCREW ASSEMBLY, CLAMP	1
*7.	123-0113	PLASTIC TIES	4
*8.	89-100-82	PAPER BOARD STOP	1
*9.	89-140-00	PULSE GENERATOR ASSEMBLY	1
10.	89-140-01	SENSOR BRACKET	1
11.	89-140-13	SENSOR ASSEMBLY	1
12.	123-0274	SCREW, 6-32	2
13.	123-0252	WASHER, STAR #6	2
14.	89-140-07	MAGNET ASSEMBLY, HAMADA	1
15.	123-0081	TRUARC	1
16	87-140-77	JUMPER PLUG – HAMADA	1

* REPLACEMENT PARTS FOR HAMADA 601/602 AUXILIARY INSTALLATION KIT A-205

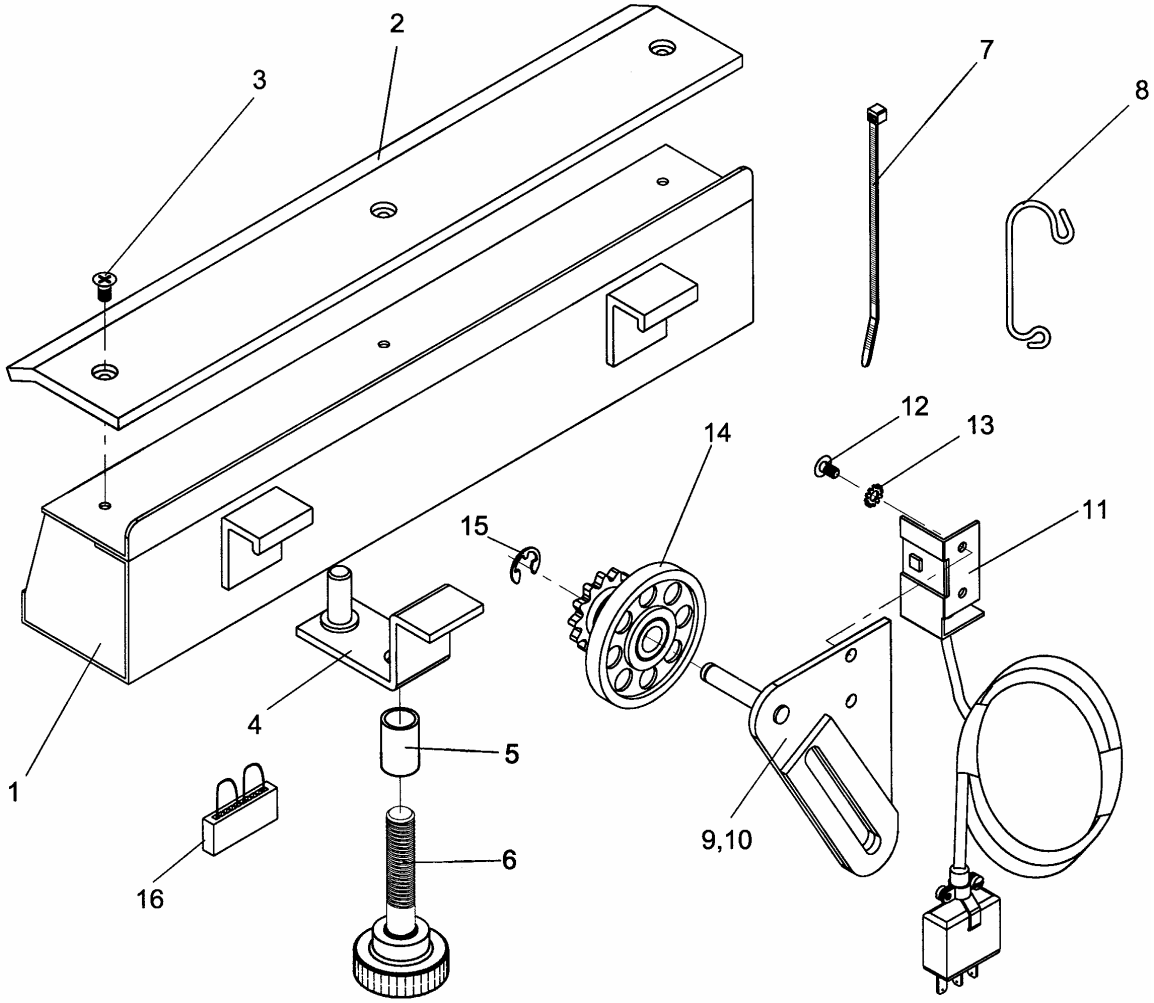

GROUP 13

REPLACEMENT PARTS FOR HAMADA 611/612 CONVERSION KIT A-210

KEY	PART NUMBER	DESCRIPTION	QTY
1.	89-101-15	WELDMENT, FRONT FEED PLATE	1
2.	87-101-10	PAD, FRONT FEED PLATE	1
3.	123-0446	SCREW	3
4.	89-101-14	CLAMP, FRONT FEED PLATE	1
5.	87-101-39	SLEEVE, CLAMP SCREW	1
6.	87-101-16	SCREW ASSEMBLY, CLAMP	1
*7.	123-0113	PLASTIC TIES	4
*8.	89-100-82	PAPER BOARD STOP	1
*9.	89-140-200	PULSE GENERATOR ASSEMBLY	1
10.	89-140-201	SENSOR BRACKET	1
11.	89-140-213	SENSOR ASSEMBLY	1
12.	123-0274	SCREW, 6-32	2
13.	123-0252	WASHER, STAR #6	2
*14.	89-140-207	MAGNET ASSEMBLY	1
*15	123-0311	WASHER, PLASTIC	1
16	123-0081	TRUARC	1
17	87-140-77	JUMPER PLUG – HAMADA	1

* REPLACEMENT PARTS FOR HAMADA 611/612 AUXILIARY INSTALLATION KIT A-212

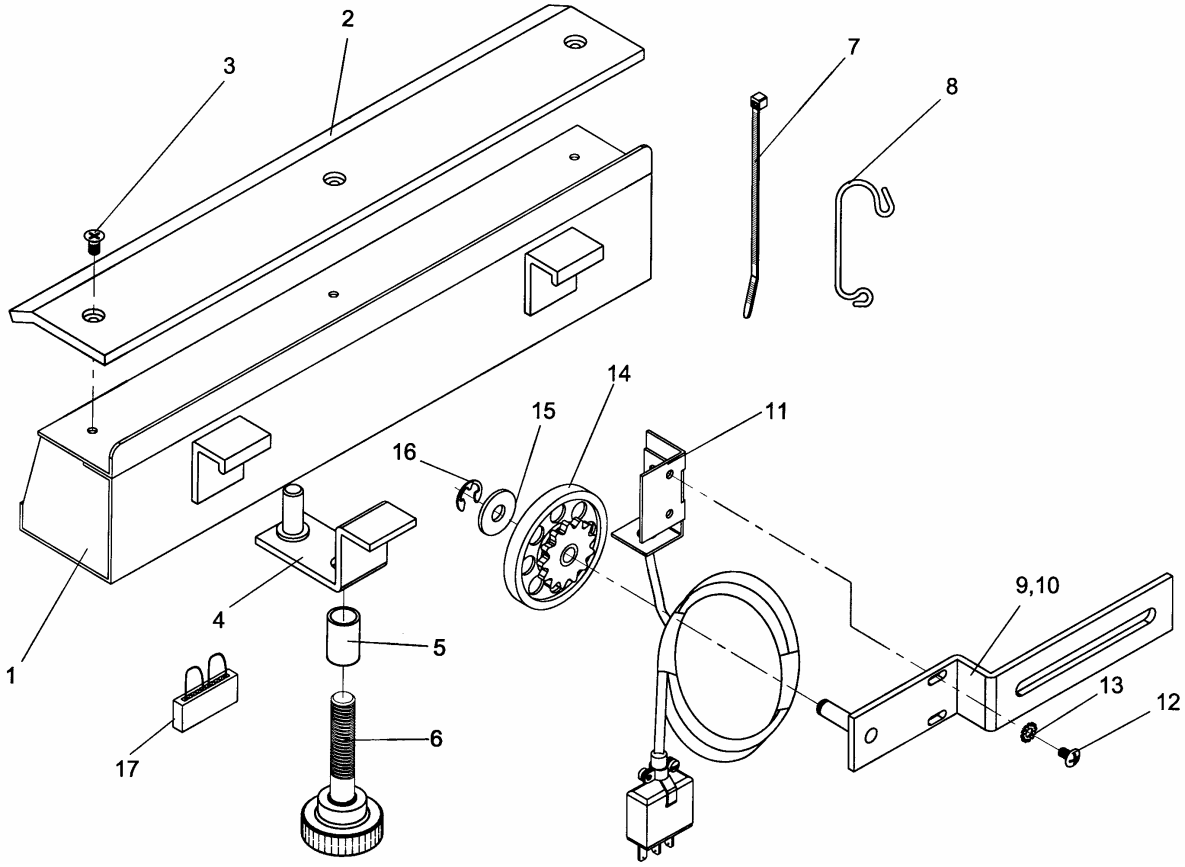

GROUP 14

REPLACEMENT PARTS FOR RYOBI 2700, 2800, 3200
CONVERSION KIT A-206

KEY	PART NUMBER	DESCRIPTION	QTY
1.	88-101-15	WELDMENT, FRONT FEED PLATE	1
2.	87-101-10	PAD, FRONT FEED PLATE	1
3.	123-0446	SCREW	3
4.	88-101-14	CLAMP, FRONT FEED PLATE	1
5.	87-101-39	SLEEVE, CLAMP SCREW	1
6.	87-101-16	SCREW ASSEMBLY, CLAMP	1
*7.	123-0113	PLASTIC TIES	4
*8.	88-100-82	PAPER BOARD STOP	1
*9.	88-140-08	SENSOR BRACKET ASSEMBLY	1
10.	88-140-02	SENSOR BRACKET	1
11.	88-140-13	SENSOR ASSEMBLY	1
12.	123-0274	SCREW, 6-32	2
13.	123-0252	WASHER, STAR #6	2
*14.	88-140-07	MAGNET ASSEMBLY, RYOBI	1
*15.	123-0256	SET SCREW	1
16.	88-140-77	JUMPER PLUG – RYOBI	1

* REPLACEMENT PARTS FOR RYOBI AUXILIARY INSTALLATION KIT A-207

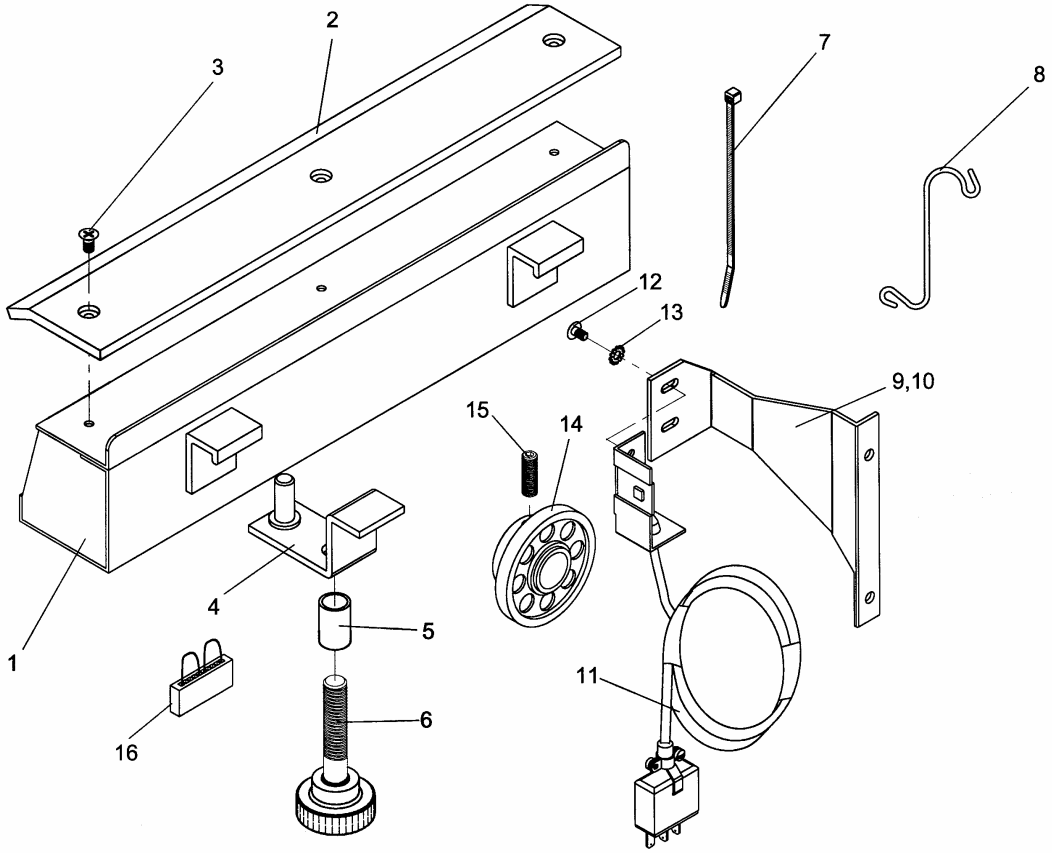

GROUP 15

REPLACEMENT PARTS FOR MULTI 1218, IMPERIAL, TOKO 4700 AND 4700CD CONVERSION KIT A-208

KEY	PART NUMBER	DESCRIPTION	QTY
1.	87-101-15	WELDMENT, FRONT FEED PLATE	1
2.	87-101-10	PAD, FRONT FEED PLATE	1
3.	123-0446	SCREW #6-32 X 5/16	3
4.	87-101-14	CLAMP, FRONT FEED PLATE	1
5.	87-101-39	SLEEVE, CLAMP SCREW	1
6.	87-101-16	SCREW ASSEMBLY, CLAMP	1
*7.	123-0113	PLASTIC TIES	4
*8.	89-100-82	PAPER BOARD STOP	1
*9.	87-140-08	SENSOR BRACKET ASSEMBLY	1
10.	87-140-02	SENSOR BRACKET	1
11.	87-140-13	SENSOR ASSEMBLY	1
12.	123-0274	SCREW, 6-32	2
13.	123-0252	WASHER, STAR #6	2
*14.	87-140-07	MAGNET ASSEMBLY, IMPERIAL	1
*15.	123-0256	SET SCREW	1
16.	88-140-77	JUMPER PLUG – IMPERIAL	1

* REPLACEMENT PARTS FOR IMPERIAL AUXILIARY INSTALLATION KIT A-209

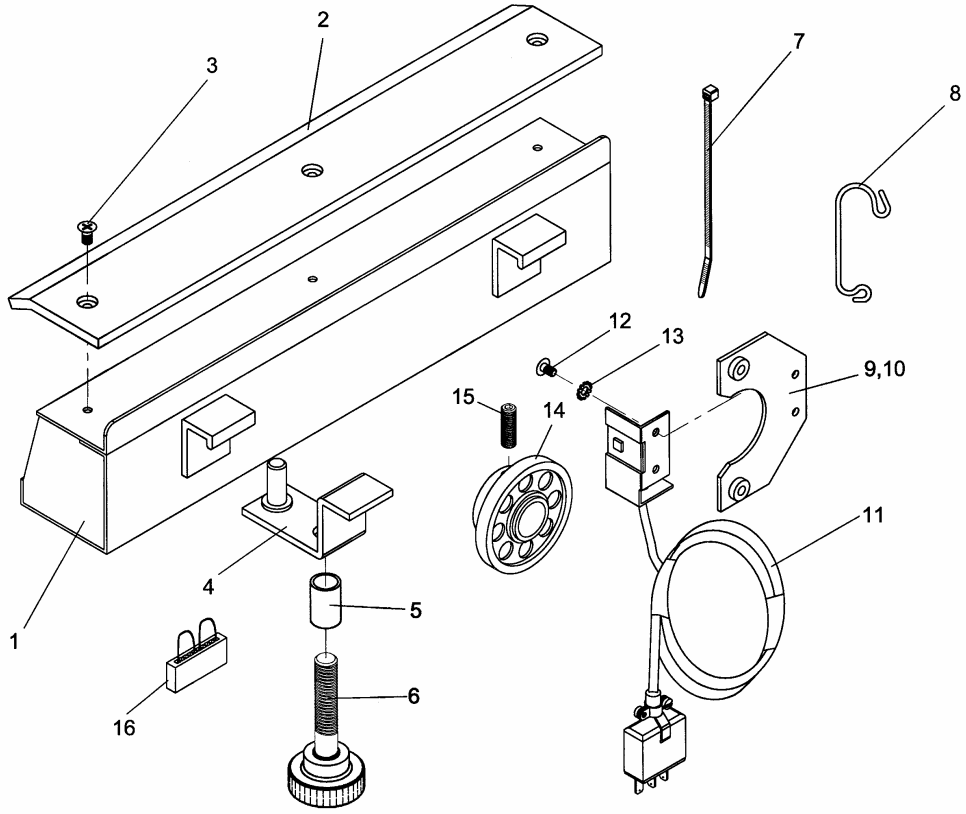

GROUP 16

REPLACEMENT PARTS FOR ADJUSTING SENSOR KIT P/N 84-160-10

KEY	PART NUMBER	DESCRIPTION	QTY
1.	84-100-00A	P.C. BOARD, DARK ENVELOPE KIT	1
*2.	84-140-84	POTENTIOMETER ASSEMBLY	1
*3.	80-120-24	SPRING	1
*4.	123-0057	ALLEN WRENCH 1/16	1
*5.	123-0096	PLASTIC WASHER	1
*6.	123-0305	INDICATOR PLATE	1
*7.	123-0390	KNOB	1
8.	84-140-77	JUMPER PLUG	1
	84-160-11	ADJUSTING SENSOR KIT #2 – INCLUDES ALL PARTS MARKED WITH ASTERISK (*) PLUS CUSTOMER'S GOOD P.C. BOARD CONVERTED TO PART NUMBER 84-100-00A	1
	84-160-12	ADJUSTING SENSOR KIT #3 – INCLUDES ALL PARTS MARKED WITH ASTERISK (*) PLUS CUSTOMER'S DEFECTIVE P.C. BOARD, REPAIRED AND CONVERTED TO PART NUMBER 84-100-00A. THE COST OF REPLACEMENT COMPONENTS ON DEFECTIVE P.C. BOARD WILL BE AN ADDITIONAL CHARGE.	

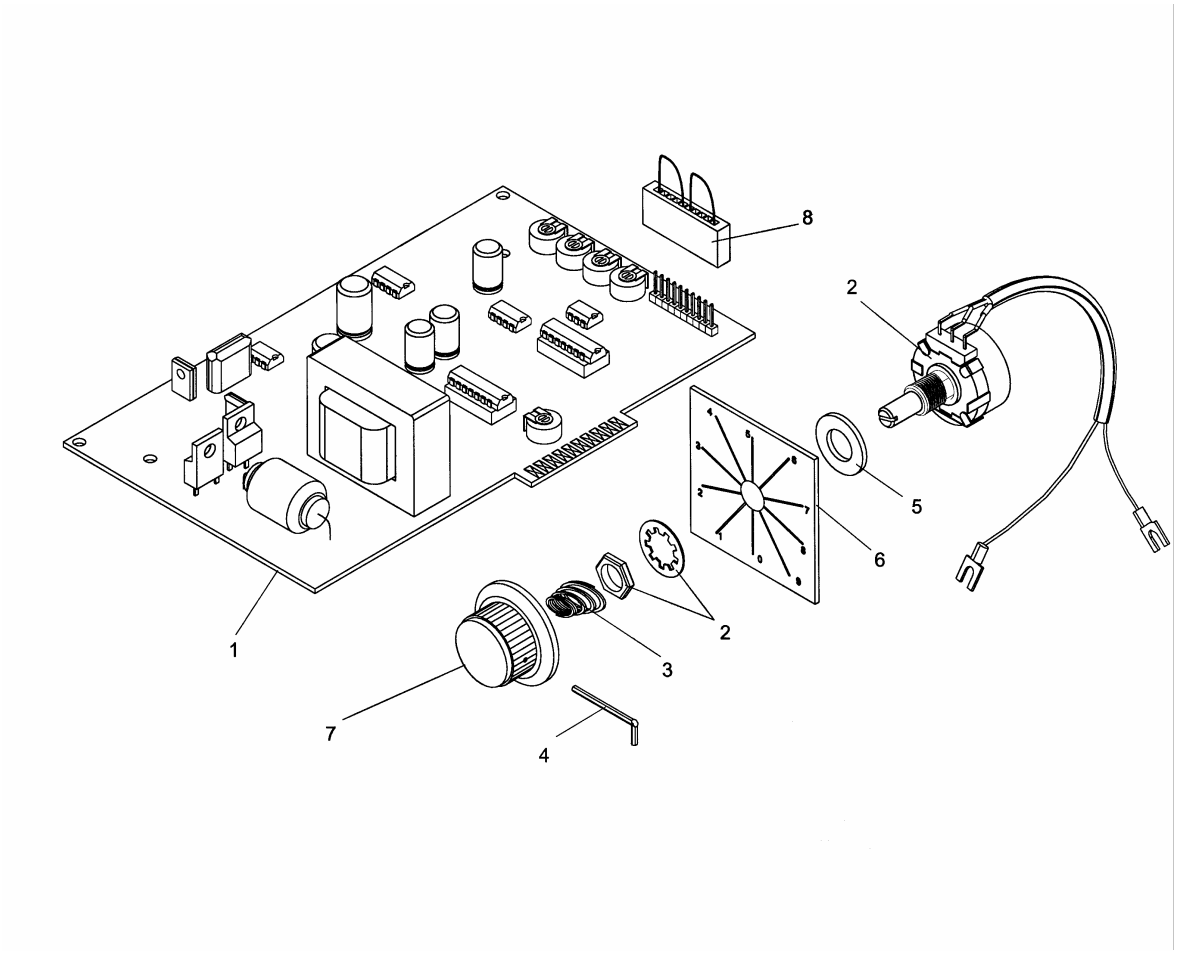

GROUP 17

REPLACEMENT PARTS FOR AUXILIARY INSTALLATION KIT FOR A.B.DICK 385 – 84-160-13

KEY	PART NUMBER	DESCRIPTION	QTY
1.	84-100-82	PAPER BOARD STOP	1
2.	84-101-49	NUT, PRESS SIDE GUIDE STOP	1
3.	84-101-51	BRACKET, PRESS SIDE GUIDE	1
4.	84-140-103	PULSE GENERATOR ASSEMBLY (AB DICK385)	1
5.	123-0113	PLASTIC TIE	4

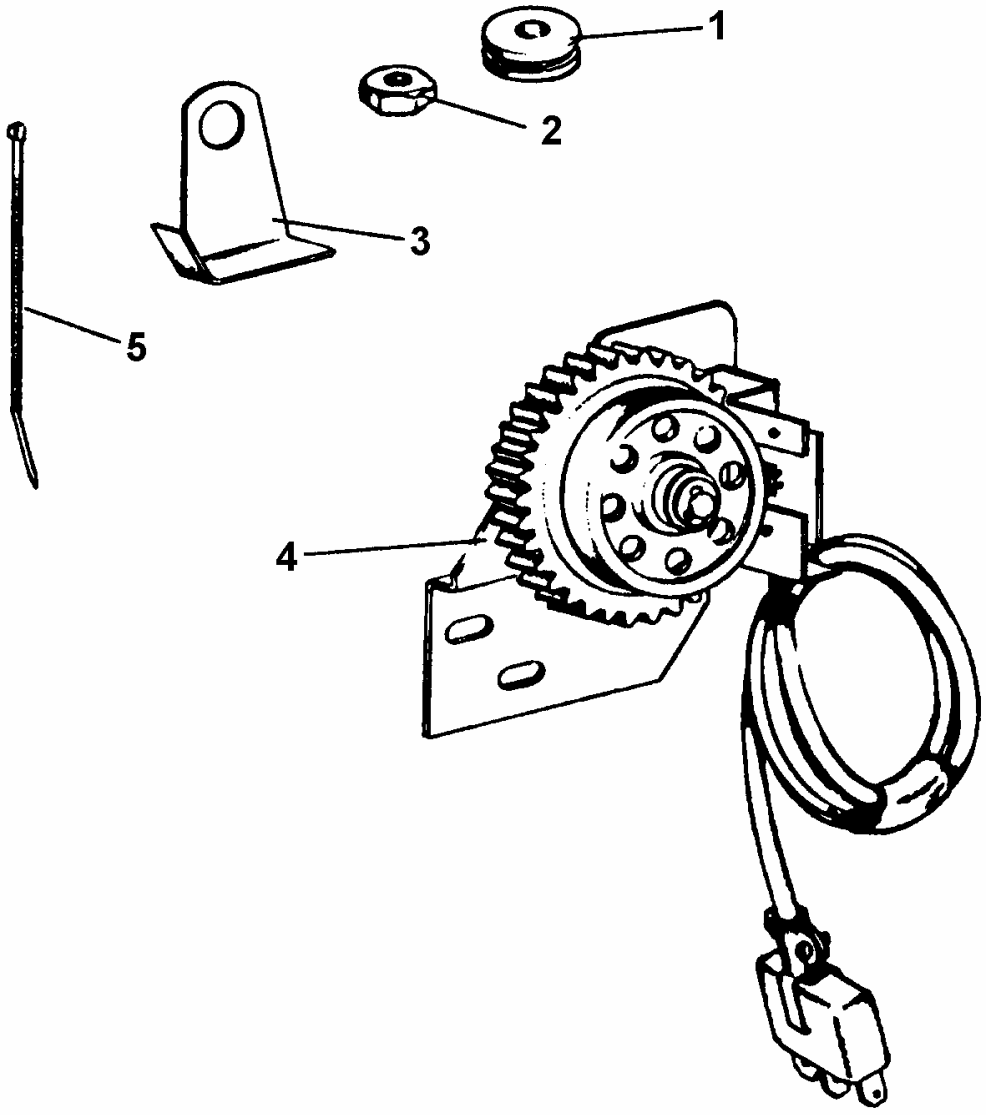

GROUP 18

REPLACEMENT PARTS FOR HAMADA 234 CONVERSION KIT A-224

KEY	PART NUMBER	DESCRIPTION	QTY
1.	89-200-18	FRONT FEED PLATE, WELDMENT	1
2.	87-101-10	PAD, FRONT FEED PLATE	1
3.	123-0446	SCREW, 8-32 X 5/16	3
4.	89-101-14	CLAMP, FRONT FEED PLATE	1
5.	87-101-39	SLEEVE, CLAMP SCREW	1
6.	87-101-16	SCREW ASSEMBLY, CLAMP	1
*7.	123-0113	PLASTIC TIES	4
*8.	84-100-182	PAPER BOARD STOP	1
*9.	89-200-09	PULSE GENERATOR ASSEMBLY.	1
10.	89-200-10	SENSOR BRACKET	1
11.	88-140-13	SENSOR ASSEMBLY	1
12.	123-0612	SCREW, 6-32	2
13.	123-0252	WASHER, STAR #6	2
14.	123-1245	SCREW, 8-31 X 1 ¼	2
15.	123-0262	WASHER, #10	2
16.	89-200-11	BRACKET	1
17.	89-200-12	MAGNET ASSEMBLY	1
18.	123-0709	SET SCREW	1
19.	88-140-77	JUMPER PLUG #2	1

* REPLACEMENT PARTS FOR HAMADA 234 AUXILIARY INSTALLATION KIT A-225

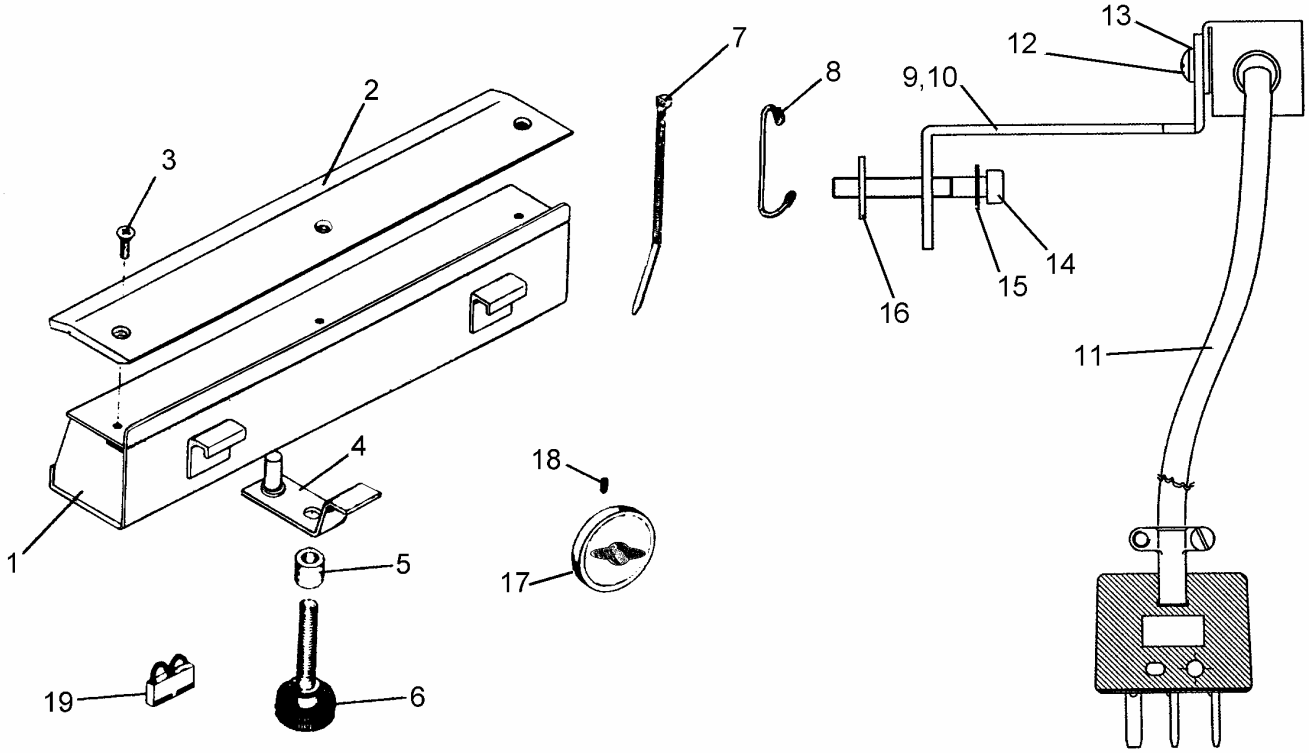

GROUP 19

REPLACEMENT PARTS FOR RYOBI 3302, ITEK 3985 CONVERSION KIT A-218

KEY	PART NUMBER	DESCRIPTION	QTY
1	88-101-15	WELDMENT, FRONT FEED PLATE	1
2	87-101-10	PAD, FRONT FEED PLATE	1
3	123-0446	SCREW	3
4	88-101-14	CLAMP, FRONT FEED PLATE	1
5	87-101-39	SLEEVE, CLAMP SCREW	1
6	87-101-16	SCREW ASSEMBLY, CLAMP	1
*7	123-0113	PLASTIC TIES	4
*8	89-100-82	PAPER BOARD STOP	1
*9	88-140-100	PULSE GENERATOR ASSY.	1
*10	86-103-20	HEIGHT EXTENDER	4
*11	84-140-77	PLUG, JUMPER	1

* REPLACEMENT PARTS FOR RYOBI TO RYOBI 2-COLOR INSTALLATION KIT A-219

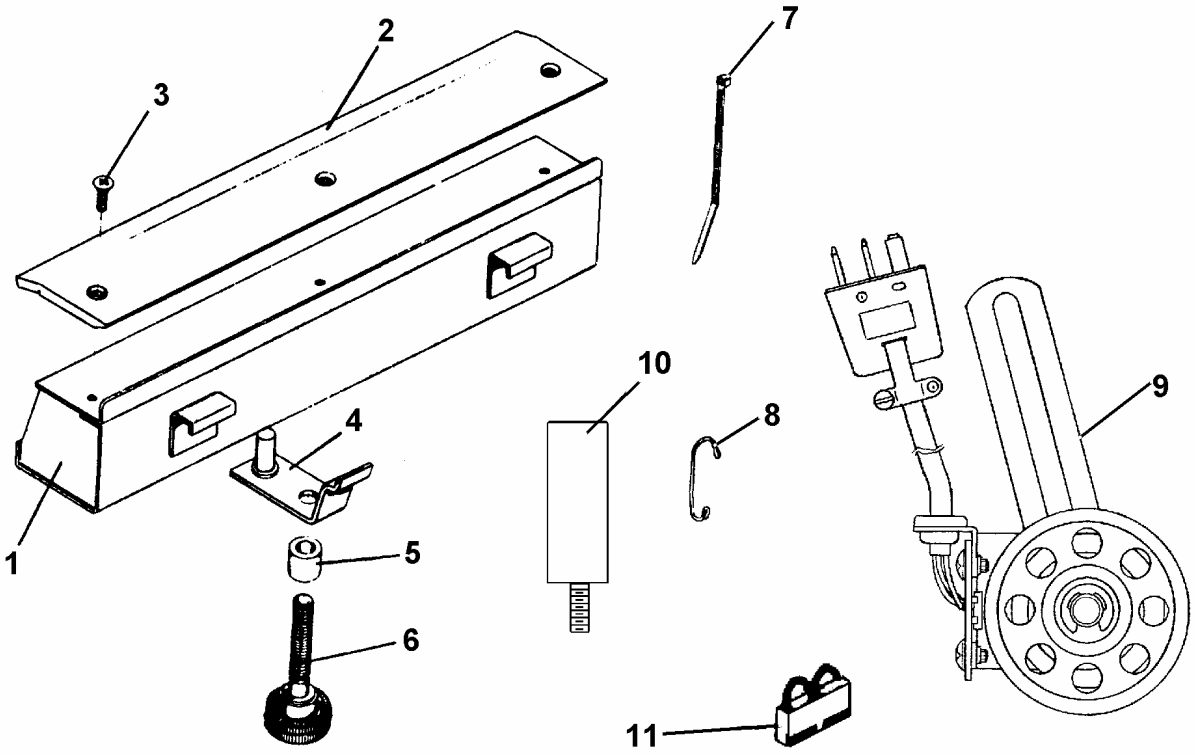

GROUP 20

REPLACEMENT PARTS FOR MULTI 1250, 1300, 1650 CONVERSION KIT A-216

KEY	PART NUMBER	DESCRIPTION	QTY
1.	89-101-15	WELDMENT, FRONT FEED PLATE	1
2.	87-101-10	PAD, FRONT FEED PLATE	1
3.	123-0446	SCREW	3
4.	89-101-14	CLAMP, FRONT FEED PLATE	1
5.	87-101-39	SLEEVE, CLAMP SCREW	1
6.	87-101-16	SCREW ASSEMBLY, CLAMP	1
*7.	123-0113	PLASTIC TIES	4
*8.	89-100-82	PAPER BOARD STOP	1
*9.	89-140-300	PULSE GENERATOR ASSEMBLY	1
10.	89-140-301	SENSOR BRACKET	1
11.	89-140-113	SENSOR ASSEMBLY	1
12.	123-0274	SCREW, 6-32	2
13.	123-0252	WASHER, STAR #6	2
14.	123-0192	NUT, HEX 6-32	2
15.	89-140-107	MAGNET ASSEMBLY	1
16.	123-0311	WASHER, PLASTIC	1
17.	123-0081	TRUARC	1
18.	89-140-77	JUMPER PLUG – MULTI	1

* REPLACEMENT PARTS FOR MULTI 1250, 1300, 1650 AUXILIARY INSTALLATION KIT A-217

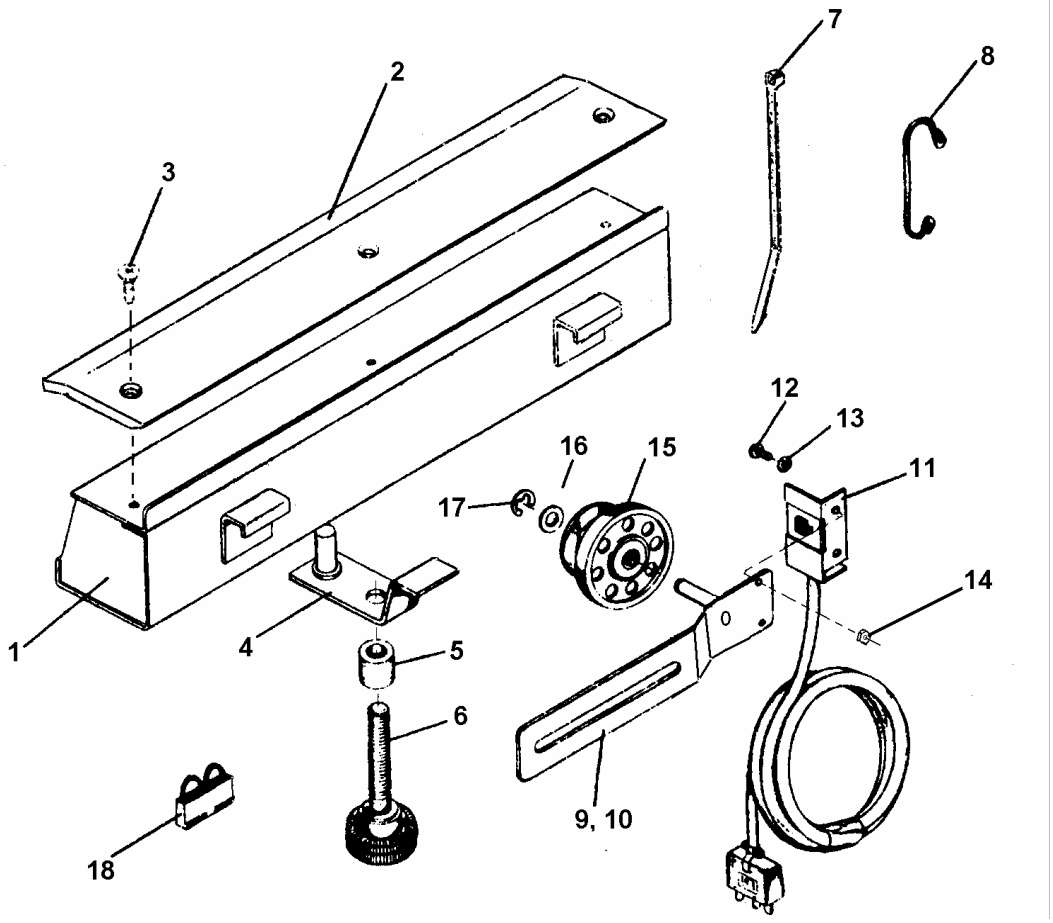

GROUP 21

REPLACEMENT PARTS FOR GESTETNER / CHIEF CONVERSION KIT A-220

KEY	PART NUMBER	DESCRIPTION	QTY
1.	87-101-10	PAD, FRONT FEED PLATE	1
2.	123-0446	SCREW	3
3.	89-101-14	CLAMP, FRONT FEED PLATE	1
4.	87-101-39	SLEEVE, CLAMP SCREW	1
5.	87-101-16	SCREW ASSEMBLY, CLAMP	1
6.	123-0113	PLASTIC FEET	4
*7.	89-100-82	PAPER BOARD STRIP	1
*8.	84-201-17	PULSE GENERATOR ASSEMBLY	1
*9.	89-14[illegible]	TRANSFER BRACKET	1
10.	89-1[illegible]1	TRANSFER ASSEMBLY	1
11.	123-[illegible]274	SCREW, 6-32	2
12.	123-[illegible]252	WASHER, STAR #6	2
13.	123-[illegible]192	NUT, HEX 6-32	2
14.	89-[illegible]7	MAGNET ASSEMBLY	1
15.	123-[illegible]1	WASHER, PLASTIC	1
16.	123-0081	TRUARC	1
17.	89-140-77	JUMPER PLUG – GESTETNER	1

OBSOLETE

* REPLACEMENT PARTS FOR GESTETNER / CHIEF AUXILIARY INSTALLATION KIT A-221

NO ILLUSTRATION AVAILABLE

GROUP 22

REPLACEMENT PARTS FOR HEIDELBERG QUICKMASTER

KEY	PART NUMBER	DESCRIPTION	QTY
1.	84-261-106	PAPER RETAINER STRAP ASSEMBLY (HEAVY)	2
2.	84-261-116	PAPER RETAINER STRAP ASSEMBLY (LIGHT)	2
3.	84-130-100	SKID WHEEL ASSEMBLY QM	1
4.	84-130-20	SKID WHEEL ASSEMBLY	1
5.	84-261-38	SIDE GUIDE ASSEMBLY L/H	1
6.	84-261-41	SIDE GUIDE ASSEMBLY R/H	1
7.	84-261-10	PAD, FRONT FEED PLATE	1
8.	84-261-26	FRONT FEED PLATE ASSEMBLY	1
9.	71-125-28	THUMBSCREW	2
10.	84-261-33	GUIDE	2
11.	123-0002	SCREW	4
12.	123-0446	SCREW, 8-32 X 5/16	3
13.	84-261-107	PAPER RETAINER STRAP (HEAVY) QM	2
14.	84-261-117	PAPER RETAINER STRAP (LIGHT) QM	2
	84-261-20	FRAME, CONVEYOR R/H (NOT SHOWN)	1
	84-261-12	FRAME, CONVEYOR L/H (NOT SHOWN)	1

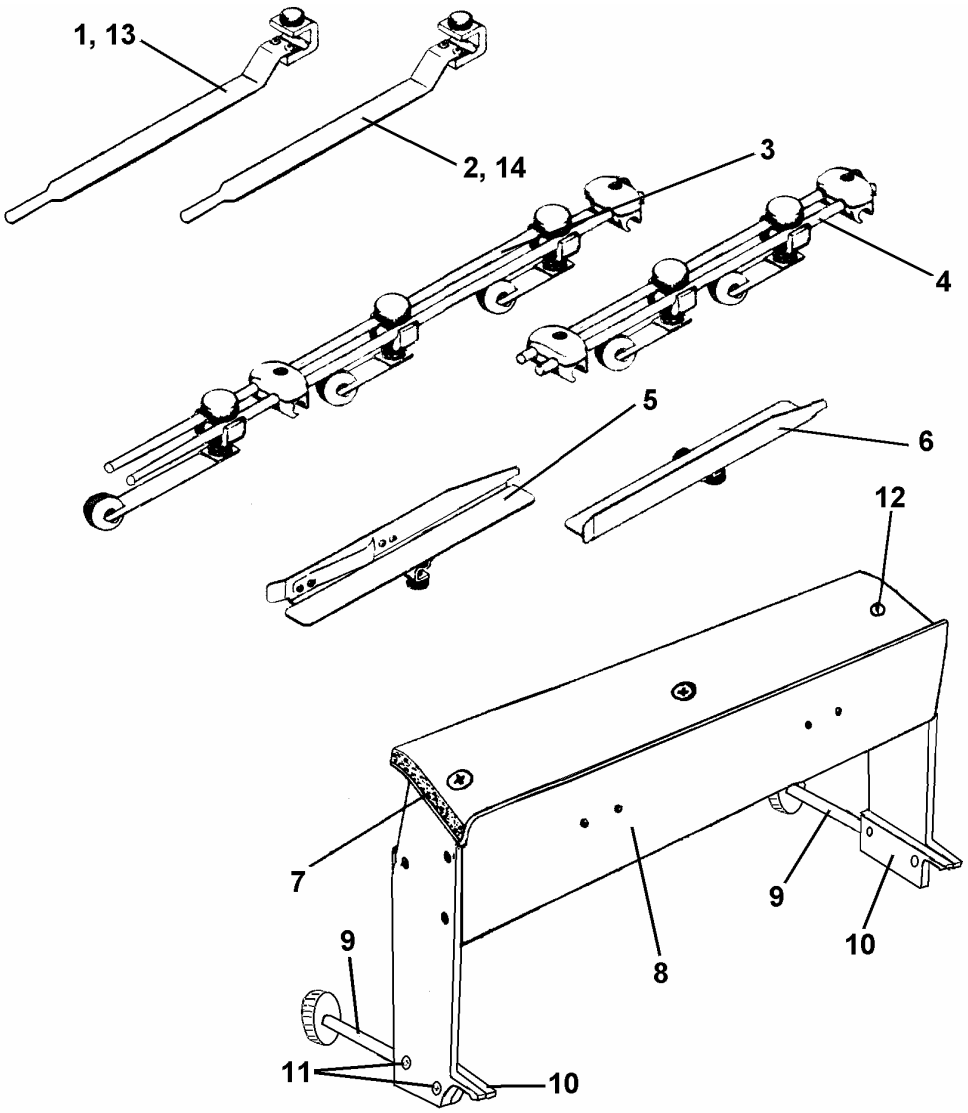

GROUP 23

REPLACEMENT PARTS FOR HAMADA RS34/VS34 CONVERSION KIT A-226

KEY	PART NUMBER	DESCRIPTION	QTY
1.	89-150-19	FRONT FEED PLATE ASSEMBLY	1
2.	87-101-10	PAD, FRONT FEED PLATE	1
3.	123-0446	SCREW	3
4.	89-101-14	CLAMP, FRONT FEED PLATE	1
5.	87-101-39	SLEEVE, CLAMP SCREW	1
6.	87-101-16	SCREW ASSEMBLY, CLAMP	1
*7.	123-0113	PLASTIC TIES	4
*8.	89-100-82	PAPER BOARD STOP	1
*9.	89-150-200	PULSE GENERATOR ASSEMBLY	1
10.	89-150-201	SENSOR BRACKET	1
11.	89-140-213	SENSOR ASSEMBLY	1
12.	123-0274	SCREW, 6-32	2
13.	123-0252	WASHER, STAR #6	2
14.	89-140-207	MAGNET ASSEMBLY	1
15	123-0311	WASHER, PLASTIC	1
16	123-0081	TRUARC	1
17	89-140-77	JUMPER PLUG – HAMADA	1

*** REPLACEMENT PARTS FOR HAMADA RS34/VS34 AUXILIARY INSTALLATION KIT A-227**

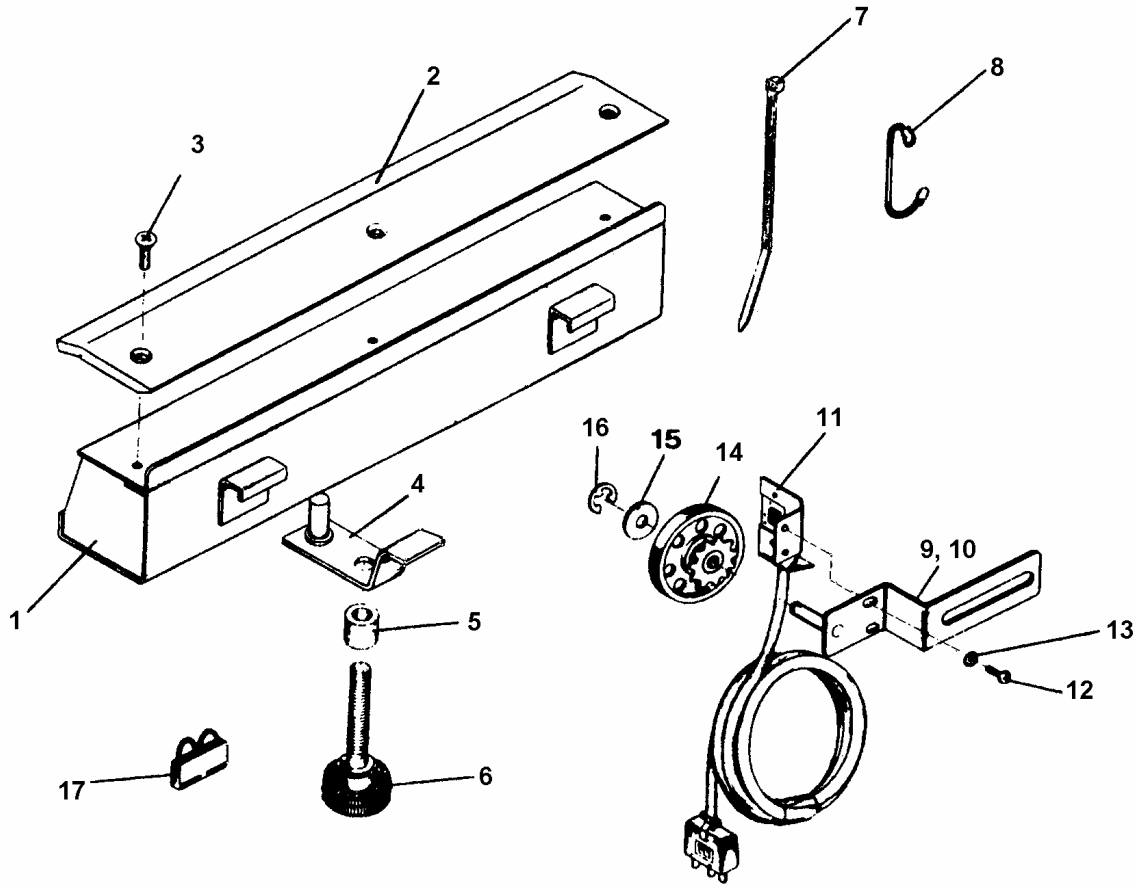

GROUP 24

REPLACEMENT PARTS FOR HEIDELBERG PRINTMASTER

KEY	PART NUMBER	DESCRIPTION	QTY
1.	84-262-106	PAPER RETAINER STRAP ASSEMBLY (HEAVY)	2
2.	84-262-116	PAPER RETAINER STRAP ASSEMBLY (LIGHT)	2
3.	86-125-46	SKID ROLLER ASSEMBLY (LONG)	2
4.	71-130-02	SKID WHEEL ASSEMBLY	2
5.	84-261-38	SIDE GUIDE ASSEMBLY L/H	1
6.	84-261-41	SIDE GUIDE ASSEMBLY R/H	1
7.	84-261-10	PAD, FRONT FEED PLATE	1
8.	84-262-26	FRONT FEED PLATE ASSEMBLY	1
9.	84-262-08	THUMBSCREW	2
10.	84-262-11	INSERT	2
11.	123-0446	SCREW, 8-32 X 5/16	3
12.	84-261-107	PAPER RETAINER STRAP (HEAVY) QM	2
13.	84-261-117	PAPER RETAINER STRAP (LIGHT) QM	2
	84-261-20	FRAME, CONVEYOR R/H (NOT SHOWN)	1
	84-261-12	FRAME, CONVEYOR L/H (NOT SHOWN)	1

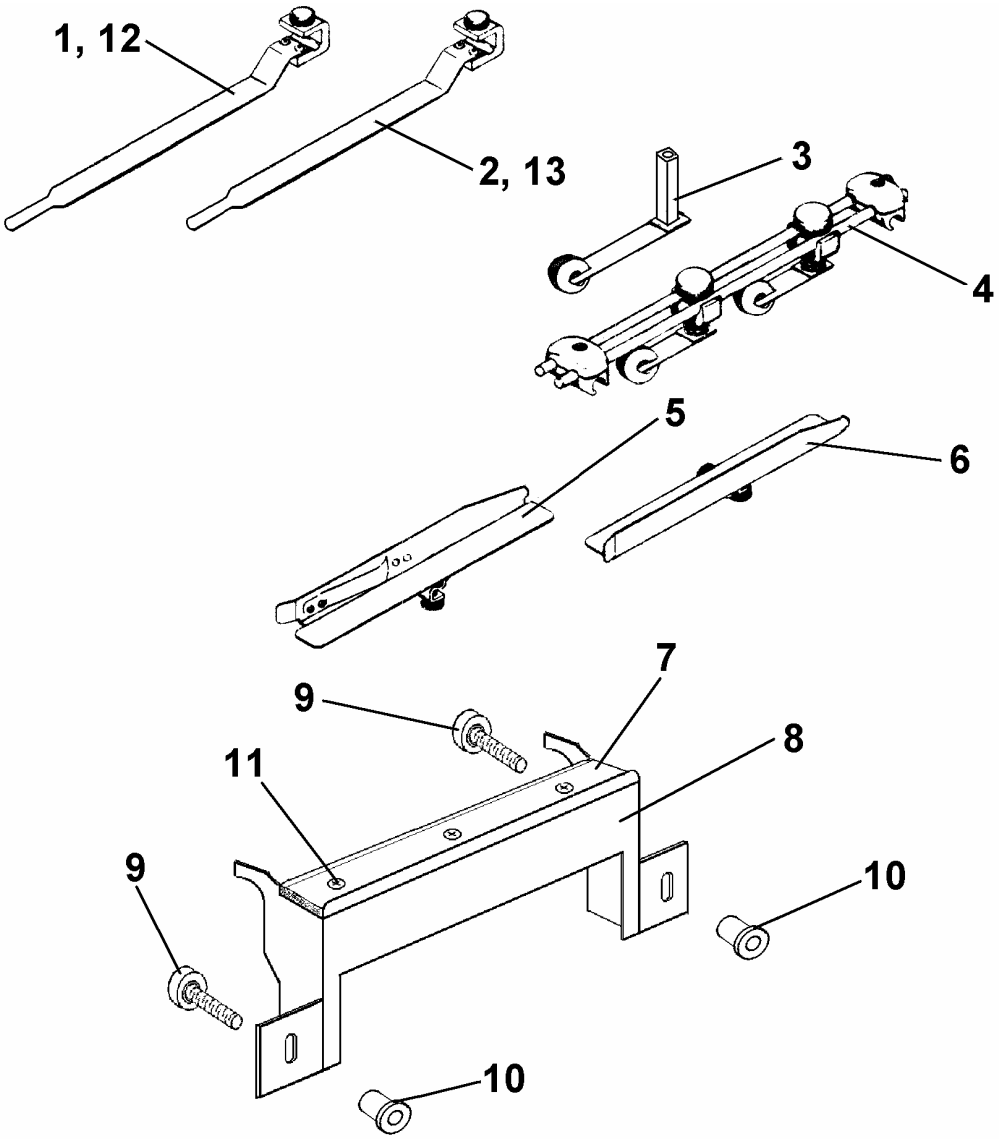

GROUP 25

REPLACEMENT PARTS FOR AB DICK 9920
CONVERSION KIT A-220

KEY	PART NUMBER	DESCRIPTION	QTY
1.	88-101-15	WELDMENT, FRONT FEED PLATE	1
2.	87-101-10	PAD, FRONT FEED PLATE	1
3.	123-0446	SCREW	3
4.	88-101-14	CLAMP, FRONT FEED PLATE	1
5.	87-101-39	SLEEVE, CLAMP SCREW	1
6.	87-101-16	SCREW ASSEMBLY, CLAMP	1
*7.	123-0113	PLASTIC TIES	4
*8.	88-100-82	PAPER BOARD STOP	1
*9.	89-250-02	PULSE GENERATOR ASSEMBLY	1
10.	89-140-77	JUMPER PLUG	1

* REPLACEMENT PARTS FOR RYOBI AUXILIARY INSTALLATION KIT A-221

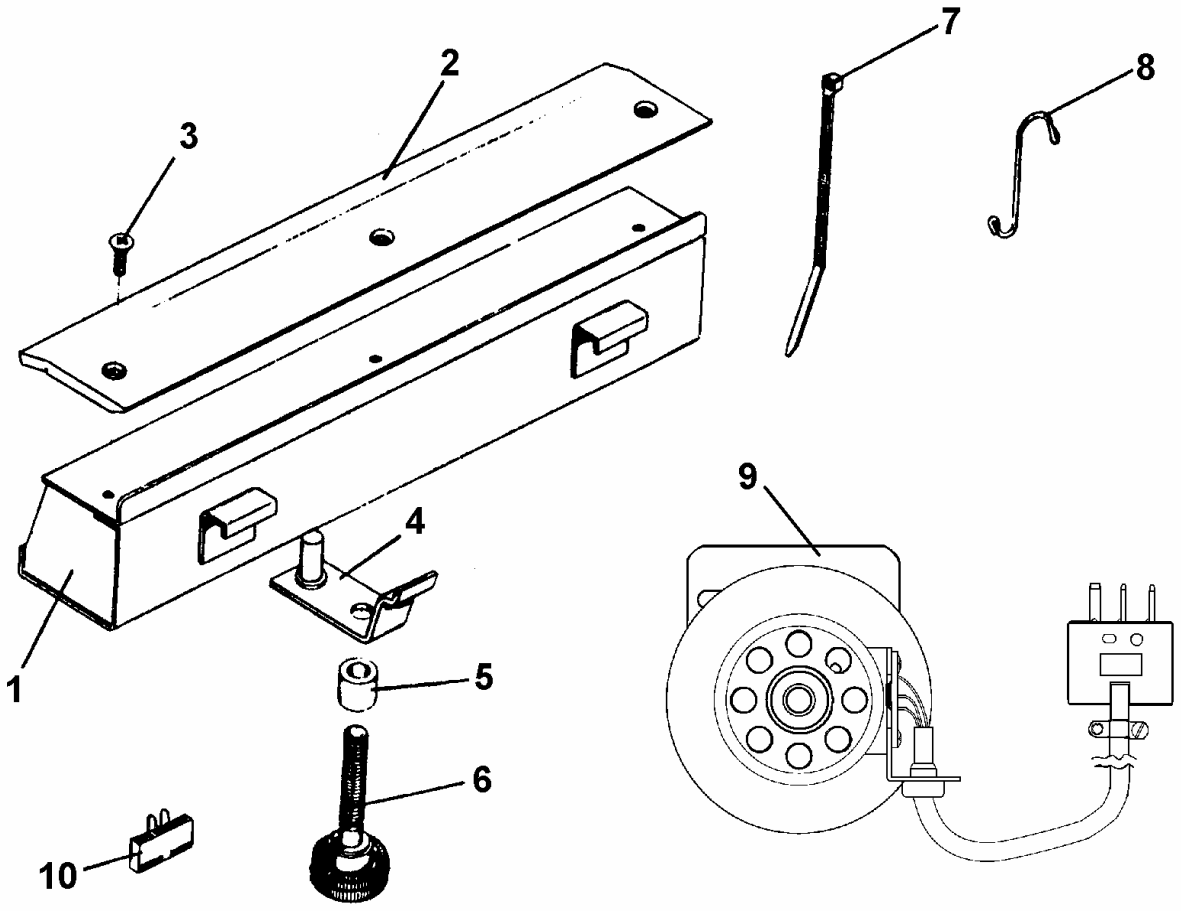

NORMAL WEAR PARTS – AMC-2000

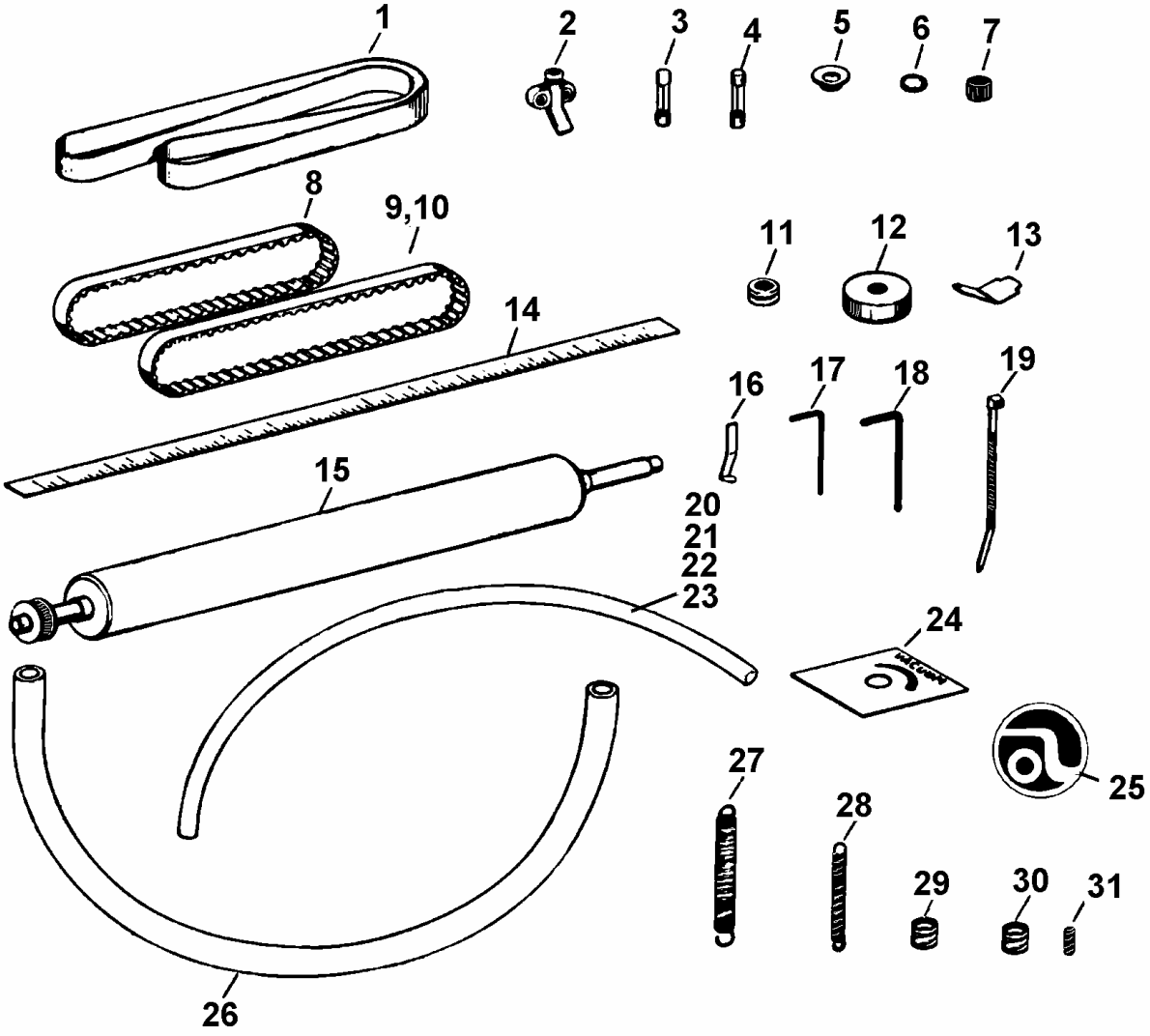

KEY #	PART #	DESCRIPTION
1	123-0107	CONVEYOR BELT
2	84-105-22	FITTING, SUCTION CUP
3	123-0285	FUSE, 2 AMP FAST BLOW
4	123-0090	FUSE, 10 AMP SLO BLOW
5	71-134-15	SUCTION CUP
6	123-0472	O-RING
7	123-0415	CAP, SUCTION FOOT
8	123-0338	TIMING BELT, 100XL031
9	123-0140	TIMING BELT, 110XL037
10	123-0277	TIMING BELT 110XL031
11	123-0092	GROMMET
12	123-0208	RUBBER PAD
13	71-130-15	SPRING, TAPE GUIDE
14	123-0328	SCALE GUIDE
15	84-115-20	RUBBER ROLLER ASSEMBLY
16	71-109-05	SHEET SEPARATOR (STANDARD)

KEY #	PART #	DESCRIPTION
16	71-109-05B	SHEET SEPARATOR (HEAVY)
17	123-0057	ALLEN WRENCH, 1/16
18	123-0058	ALLEN WRENCH, 3/32
19	123-0113	PLASTIC TIE
20	84-106-40A	HOSE VACUUM 10-1/4"
21	84-106-40B	HOSE VACUUM 13-1/4"
22	84-106-40C	HOSE VACUUM 15-1/2"
23	84-106-40D	HOSE VACUUM 16-3/4"
24	123-0407	DECAL, VACUUM VALVE
25	123-0752	DECAL, ASTRO LOGO
26	84-106-41	HOSE, VACUUM PUMP
27	84-120-10	SPRING, U.P.O.R.
28	80-120-25	SPRING, JOGGER GUIDE
29	84-120-31	SPRING, VALVE NEEDLE
30	84-120-05	SPRING, SIDE GUIDE
31	71-120-09	SPRING, CARRIAGE TILT

Numerical Index

PART #	KEY #	GROUP
123-0001	79	4
123-0002	11	22
123-0002	24	4
123-0003	27	4
123-0008	41	4
123-0010	33	1
123-0017	2	2
123-0017	7	4
123-0017	59	3
123-0018	12	2
123-0024	1	6
123-0024	4	4
123-0024	24	3
123-0024	49	2
123-0034	47	2
123-0035	35	4
123-0036	21	4
123-0050	17	3
123-0050	47	4
123-0050	48	2
123-0051	37	2
123-0054	6	1A
123-0054	30	2
123-0054	73	4
123-0057	4	16
123-0063	7	1A
123-0063	8	8
123-0063	28	2
123-0064	29	2
123-0064	30	4
123-0073	7	1
123-0076	6	8
123-0077	83	4
123-0080	10	4
123-0080	32	3
123-0081	7	8
123-0081	15	12
123-0081	16	11
123-0081	16	13
123-0081	16	21
123-0081	16	23
123-0081	17	20
123-0081	43	4
123-0082C	80	4
123-0090	13	5
123-0092	15	6
123-0093	10	1A
123-0096	5	16
123-0096	44	2
123-0099	58	3
123-0100	33	3
123-0107	29	3
123-0113	19	9
123-0113	5	17
123-0113	6	21
123-0113	7	11
123-0113	7	12
123-0113	7	13
123-0113	7	14
123-0113	7	15
123-0113	7	18
123-0113	7	19
123-0113	7	20
123-0113	7	23
123-0113	7	25
123-0113	16	6
123-0113	16	10
123-0114	21	5
123-0125	1	3
123-0125	2	5
123-0126	32	1
123-0127	50	3
123-0131	35	2
123-0135	16	2
123-0140	61	4
123-0143	27	2
123-0143	31	4
123-0145	53	2
123-0180	44	1
123-0182	75	4
123-0185	1	7
123-0185	48	3
123-0192	13	21
123-0192	14	20
123-0192	38	3
123-0194	13	8
123-0195		8
123-0196	91	4
123-0199	77	4
123-0200	19	2
123-0200	76	4
123-0208	1	1A
123-0229	4	5
123-0236R		4
123-0237	2	7
123-0237	50	2
123-0237	70	4
123-0240	70	3
123-0241	13	3
123-0241	16	5
123-0252	12	21
123-0252	13	11
123-0252	13	12
123-0252	13	13
123-0252	13	14
123-0252	13	15
123-0252	13	18
123-0252	13	20
123-0252	13	23
123-0252	95	4
123-0256	15	14
123-0256	15	15
123-0257	72	3
123-0262	15	18
123-0262	51	2
123-0263	84	4
123-0274	3	8
123-0274	8	4
123-0274	11	21
123-0274	12	11
123-0274	12	12
123-0274	12	13
123-0274	12	14
123-0274	12	15
123-0274	12	20
123-0274	12	23
123-0275	29	4
123-0275	39	3
123-0276	21	3
123-0277	23	4
123-0280	15	10
123-0280	23	3
123-0280	94	4
123-0285	12	5
123-0293	23	2
123-0299	5	5
123-0305	6	16
123-0325	55	2
123-0311	11	8
123-0311	13	1A
123-0311	15	11
123-0311	15	13
123-0311	15	21
123-0311	15	23
123-0311	16	20
123-0311	45	2
123-0312	52	2
123-0328	42	1
123-0338	56	4
123-0339	45	3
123-0340	8	1A
123-0345	14	3
123-0350	93	4
123-0351	10	5
123-0352	6	5
123-0353	8	5

PART #	KEY #	GROUP
123-0354	7	5
123-0355	11	5
123-0358	37	3
123-0371	45	4
123-0374	52	4
123-0375	38	4
123-0377	14	5
123-0387	68	4
123-0390	2	6
123-0390	7	16
123-0390	9	5
123-0394	3	1A
123-0394	92	4
123-0398	57	4
123-0399	32	4
123-0401	4	6
123-0407	26	1
123-0408	17	5
123-0415	65	4
123-0423	14	4
123-0426	13	10
123-0426	19	5
123-0431	68	3
123-0433	20	1
123-0436	16	1A
123-0436	41	2
123-0446	2	21
123-0446	3	11
123-0446	3	12
123-0446	3	13
123-0446	3	14
123-0446	3	15
123-0446	3	18
123-0446	3	19
123-0446	3	20
123-0446	3	23
123-0446	11	3
123-0446	12	22
123-0446	11	24
123-0446	3	25
123-0450	6	5
123-0460	22	1
123-0461	41	1
123-0462	21	1
123-0471	72	4
123-0472	14	10
123-0472	65	3
123-0497	85	4
123-0517	31	2
123-0521	32	2
123-0523	47	3
123-0527	8	6
123-0558	86	4
123-0612	12	18
123-0695	7	2
123-0701	46	2
123-0707	25	2
123-0709	18	18
123-0752	11	1
123-0757	38	2
123-0841	9	2
123-0855	39	2
123-0975	31	1
123-1245	14	18
123-1626	3	7
123-1936	54	2
156-102-18	1	2
156-103-03	22	2
156-103-04	26	2
156-103-05	3	2
156-103-06	5	2
156-103-07	4	2
156-103-08	13	2
156-103-09	14	2
156-103-11	11	2
156-103-12	10	2
156-103-20	17	2
156-103-21	15	2
156-103-23	20	2
156-103-25	6	2
156-103-26	18	2
156-103-27	8	2
56-108-22	43	2
56-114-03	7	10
56-114-03	18	1
56-114-04	8	10
56-114-04	17	1
56-114-05	53	3
56-114-06	6	3
56-114-12	52	3
56-114-17	55	3
71-108-04A	36	1
71-108-06A	35	1
71-108-09	30	1
71-108-15	28	1
71-109-03A	37	1
71-109-05	34	1
71-109-07	3	3
71-109-07	40	1
71-109-07	49	3
71-109-11	29	1
71-120-01	66	4
71-120-06	8	3
71-120-09	12	4
71-121-03	15	4
71-121-05	33	4
71-121-06	40	4
71-122-06	22	4
71-125-17	7	3
71-125-21	4	3
71-125-28	9	22
71-125-37A	15	3
71-125-46	9	3
71-125-47E	12	3
71-125-48	10	3
71-125-84	16	3
71-130-13	26	3
71-130-15	27	3
71-134-15	1	4
71-140-08	1	10
71-140-08	2	1
71-140-08L	2	1
71-140-10	2	10
71-140-10	3	1
71-140-10L	3	1
71-140-13	3	10
71-140-13	27	1
74-100-13	23	1
74-105-12	11	4
80-100-34	74	4
80-108-20	2	1A
80-108-22	4	1A
80-112-03A	43	3
80-112-04	46	3
80-112-06	34	3
80-112-21	44	3
80-120-24	3	16
80-120-25	36	3
84-100-001	3	5
84-100-002	3	5
84-100-003	3	5
84-100-004	3	5
84-100-005	3	5
84-100-006	3	5
84-100-008	3	5
84-100-012	3	5
84-100-014	3	5
84-100-015	3	5
84-100-016	3	5
84-100-017	3	5
84-100-018	3	5
84-100-100	3	5
84-100-00A	1	16
84-100-01B	62	4
84-100-02B	26	4
84-100-15	11	10
84-100-15	19	1
84-100-182	8	18
84-100-20	15	1
84-100-22B	9	1
84-100-54	48	4
84-100-56B	1	1
84-100-62	81	4
84-100-74B	14	1
84-100-75B	12	1

PART #	KEY #	GROUP
84-100-81	13	1
84-100-82	1	8
84-100-82	1	9
84-100-82	1	17
84-101-02	62	3
84-101-02W	69	3
84-101-07	19	3
84-101-10	61	3
84-101-10W	66	3
84-101-12	41	3
84-101-14	64	3
84-101-15	60	3
84-101-15W	67	3
84-101-16	63	3
84-101-17	18	3
84-101-17	50	4
84-101-18	96	4
84-101-19	31	3
84-101-20B	20	3
84-101-24	28	3
84-101-25	35	3
84-101-26	30	3
84-101-27	40	3
84-101-29	25	3
84-101-31	5	3
84-101-41	55	4
84-101-45	59	4
84-101-46	58	4
84-101-49	10	9
84-101-49	2	17
84-101-49	10	8
84-101-51	9	9
84-101-51	3	17
84-101-51	9	8
84-102-10	37	4
84-103-01	5	1A
84-103-05	9	1A
84-103-07	11	1A
84-103-07	34	2
84-103-08	12	1A
84-103-10	14	1A
84-103-10	42	2
84-104-00	53	4
84-104-06	69	4
84-104-07	82	4
84-105-01	16	4
84-105-08	9	4
84-105-22	2	4
84-105-30	5	4
84-105-31	18	4
84-105-35	3	4
84-105-36	13	4
84-105-37	17	4
84-106-03	5	6
84-106-07	6	6
84-106-08	7	6
84-106-11	67	4
84-106-19	63	4
84-106-20	64	4
84-106-28	10	6
84-106-28	25	4
84-106-40A	11	6
84-106-40B	12	6
84-106-40C	13	6
84-106-40D	14	6
84-106-41	36	2
84-107-06	34	4
84-107-08	36	4
84-107-09	51	4
84-107-12	46	4
84-107-13	44	4
84-107-14	42	4
84-108-02	8	1
84-108-03	10	1
84-108-20	4	10
84-108-20	43	1
84-108-20L	43	1
84-108-22	5	1
84-108-23	6	1
84-108-25	4	1
84-114-05	57	3
84-114-12	51	3
84-114-34	45	1
84-115-20	19	4
84-117-11	20	4
84-120-05	54	3
84-120-10	6	4
84-120-10	49	4
84-120-26A	39	4
84-120-26B	39	4
84-120-31	3	6
84-121-12	28	4
84-121-12	42	3
84-121-18	54	4
84-122-22	78	4
84-122-25	60	4
84-125-107	2	3
84-125-108	6	10
84-125-108	24	1
84-125-110	10	10
84-125-110	16	1
84-125-111	38	1
84-125-112	39	1
84-128-08	4	7
84-128-08	71	4
84-128-80	5	7
84-130-100	3	22
84-130-100	3	24
84-130-20	4	22
84-130-20	5	10
84-130-20	25	1
84-130-20	4	24
84-140-00	4	12
84-140-00	12	8
84-140-01	2	8
84-140-07	5	8
84-140-103	4	17
84-140-12	12	10
84-140-13	4	8
84-140-20	9	10
84-140-22	17	10
84-140-22	71	3
84-140-66	1	5
84-140-70	15	5
84-140-70P	20	5
84-140-71	22	3
84-140-72	90	4
84-140-73	87	4
84-140-74	88	4
84-140-75	89	4
84-140-77	8	16
84-140-77	11	19
84-140-77	18	5
84-140-78	15	1A
84-140-78	40	2
84-140-84	2	16
84-150-25	56	3
84-160-10		16
84-160-11		16
84-160-12		16
84-201-17	8	21
84-261-10	7	22
84-261-10	7	24
84-261-106	1	22
84-261-107	13	22
84-261-116	2	22
84-261-117	14	22
84-261-12		22
84-261-12		24
84-261-20		22
84-261-20		24
84-261-26	8	22
84-261-33	10	22
84-261-38	5	22
84-261-38	5	24
84-261-41	6	22
84-261-41	6	24
84-262-08	9	24
84-262-11	10	24
84-262-26	8	24
84-262-106	1	24
84-262-107	12	24
84-262-116	2	24
84-262-117	13	24
86-103-04	21	2

PART #	KEY #	GROUP
86-103-06	24	2
86-103-20	10	19
86-103-31	33	2
86-106-41	9	6
86-125-46	7	3
86-125-46	24	3
87-101-10	1	21
87-101-10	2	11
87-101-10	2	12
87-101-10	2	13
87-101-10	2	14
87-101-10	2	15
87-101-10	2	18
87-101-10	2	19
87-101-10	2	20
87-101-10	2	23
87-101-10	2	25
87-101-14	4	15
87-101-15	1	15
87-101-16	5	21
87-101-16	6	11
87-101-16	6	12
87-101-16	6	13
87-101-16	6	14
87-101-16	6	15
85-101-16	6	18
87-101-16	6	19
87-101-16	6	20
87-101-16	6	23
87-101-16	6	25
87-101-39	4	21
87-101-39	5	11
87-101-39	5	12
87-101-39	5	13
87-101-39	5	14
87-101-39	5	15
87-101-39	5	18
87-101-39	5	19
87-101-39	5	20
87-101-39	5	23
87-101-39	5	25
87-140-02	10	15
87-140-07	14	15
87-140-08	9	15
87-140-13	11	15
87-140-77	16	12
87-140-77	17	13
88-100-82	8	14
88-100-82	8	25
88-101-14	4	14
88-101-14	4	19
88-101-14	4	25
88-101-15	1	14
88-101-15	1	19
88-101-15	1	25
88-140-02	10	14
88-140-07	14	14
88-140-08	9	14
88-140-100	9	19
88-140-13	11	14
88-140-13	11	18
88-140-77	16	14
88-140-77	16	15
88-140-77	19	18
89-100-82	7	21
89-100-82	8	11
89-100-82	8	12
89-100-82	8	13
89-100-82	8	15
89-100-82	8	19
89-100-82	8	20
89-100-82	8	23
89-101-14	3	21
89-101-14	4	11
89-101-14	4	12
89-101-14	4	13
89-101-14	4	18
89-101-14	4	20
89-101-14	4	23
89-101-15	1	11
89-101-15	1	12
89-101-15	1	13
89-101-15	1	20
89-140-00	9	12
89-140-01	10	12
89-140-07	14	12
89-140-100	9	11
89-140-101	9	21
89-140-101	10	11
89-140-107	14	11
89-140-107	14	21
89-140-107	15	20
89-140-113	10	21
89-140-113	11	11
89-140-113	11	20
89-140-13	11	12
89-140-200	9	13
89-140-201	10	13
89-140-207	14	13
89-140-207	14	23
89-140-213	11	13
89-140-213	11	23
89-140-300	9	20
89-140-301	10	20
89-140-77	17	11
89-140-77	17	21
89-140-77	17	23
89-140-77	18	20
89-140-77	10	25
89-150-19	1	23
89-150-200	9	23
89-150-201	10	23
89-200-09	9	18
89-200-10	10	18
89-200-11	16	18
89-200-12	17	18
89-200-18	1	18
89-250-02	9	25
AK524		2
K247		2
K478		2

ASTRO
MACHINE CORP.

Copyright © 2009 Astro Machine Corporation
Elk Grove Village, Illinois 60007
07/21/2010
P/N: 100-AMC2000 Rev P.