HAMADA

SERVICE MANUAL

Mechanical information

HAMADA B452 Series

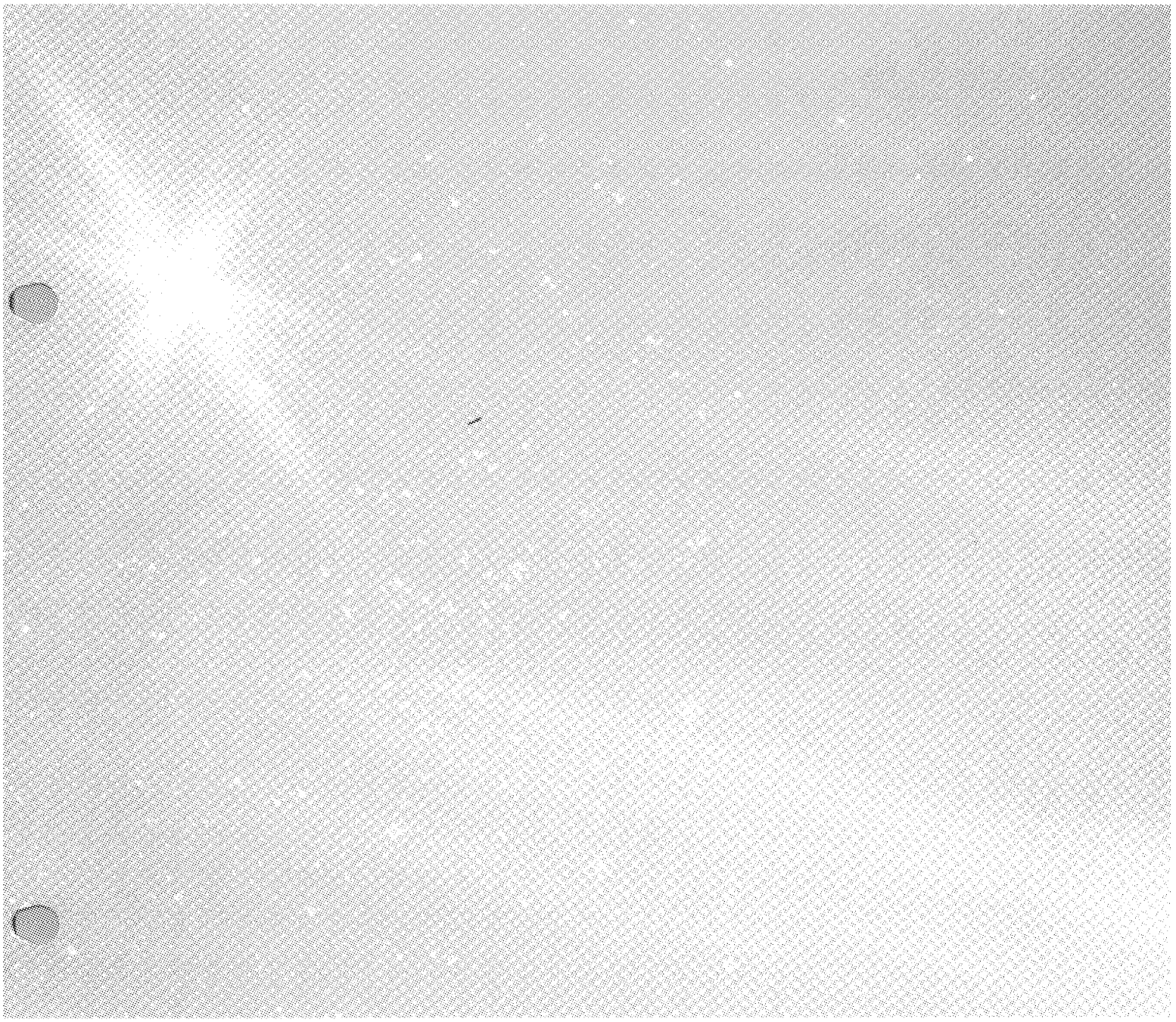

B452 SERIES MACHINE SERVICE MANUAL

----- Table of Contents -----

1. Precautions on Installation and Operation of Machine---------- 1
[1] Installation environment (1) through (5)---------- 1
[2] Power source---------- 2
[3] Installation precautions---------- 2
[4] Carrying in the machine---------- 3
(1) Method of carrying in the machine---------- 3
[5] Leveling the machine---------- 4
(1) Accuracy of level---------- 4
(2) Method of leveling---------- 4
2. Trial operation---------- 5
[1] Wiring to the machine---------- 5
(1) Wiring of the power supply---------- 5
(2) Wiring to additional equipment---------- 5
(water circulation unit, decurler and compressor) ---------- 5
(3) Wiring to the ink key controller ---------- 5
(4) Wiring to the unit control box---------- 5
[2] Piping ---------- 6
(1) Piping to the water circulating system---------- 6
(Piping the compressor and decurler)---------- 6
[3] Checking the electrical---------- ---------- 6
(1) Checking the phase of the power supply---------- 6
(2) Inspection and adjustment of supply voltage---------- 6
(3) Inspection of control voltage---------- 7
(4) Inspection of sensitivity of double sheet detection sensor---------- 7
(5) Checking the operation of safety cover and safety bar---------- 7
[4] Setting the compressor pressure---------- 8
[5] Setting the pump pressure---------- 8
[6] Lubrication and idling---------- 8
(1) Lubrication after installation ---------- 8
(2) Idling---------- 8
[7] Inspection at delivery and installation---------- 9
[8] Periodic inspection sheet (Maintenance sheet)---------- 9
3. Referencedegree for each adjustment---------- 11
[1] Set the point of reference to 45 deg.---------- 11
[2] Timing table---------- 11
4. Jigs for gripper opening adjustment---------- 12
[1] Bearing for No.1, No.2 impression cylinder and No.3 transfer cylinder grippers---------- 12
[2] Cam for adjustment of No.2 and No.4 transfer cylinder grippers---------- 12
[3] Adjustment screw for gripper shaft adjustment ---------- 12
[4] Lever positioning block gauge for swing gripper opening ---------- 12
[5] Cam positioning gauge for swing gripper opening---------- 13

[6] Lever positioning gauge for delivery gripper opening ---------- 13
[7] Pin gauge for the base point of reference degees. ---------- 13
5. Adjustment of feeder unit ---------- 14
[1] Tension adjustment of feeder unit driving chain ---------- 14
[2] Tension adjustment of feeder head driving chain---------- 14
[3] Tension adjustment of feeder table elevating motor chain---------- 14
[4] Adjustment of feeder head brake---------- 15
[5] Brake adjustment of feeder board raising unit---------- 15
[6] Adjustment of timing of feeder board raising crank rod---------- 15
[7] Adjustment of air cylinder piston rod of feeder table raising mechanism---------- 16
[8] Adjustment of paper height detection limit sensor position---------- 16
[9] Adjustment of feeder board upper limit detection limit switch---------- 16
[10] Adjustment of feeder board lower limit detection limit switch----------16
[11] Adjustment of feeder board (with paper stock) detection sensor position---------- 16
[12] Adjustment of front lay position---------- 17
[13] Adjustment of front lay timing----------17
[14] Adjustment of sucker angle----------17
[15] Adjustment of pullout roller pressure---------- 17
[16] Adjustment of pullout roller timing---------- 18
[17] Adjustment of sensor detection plate of double sheet detector---------- 18
[18] Adjustment of position for vertical guide installation---------- 18
[19] Parallel adjustment of feeder board---------- 18
[20] Adjustment of feeder unit timing to the main unit---------- 19
6. Adjustment of main unit----------20
[1] Tension adjustment of the driving belt of the machine ---------- 20
[2] Position adjustment of impression cylinder and blanket cylinder---------- 20
[3] Position adjustment of blanket cylinder and plate cylinder---------- 20
[4] Adjustment of cylinder pressure ON/OFF air cylinder---------- 21
[5] Adjustment of cylinder paking and gap between cylinder----------21
[6] Adjustment of plate cylinder micro vertical adjustment unit---------- 22
[7] Adjustment of plate cylinder micro horizontal adjustment unit----------22
[8] Position adjustment of plate clamp base---------- 22
[9] Adjustment of plate clamp---------- 23
[10] Gripper arrangement layout---------- 23
[11] Adjustment of double gripper fingers of each cylinder---------- 24
[12] Adjustment of spring tension for cylinder grippers---------- 24
[13] Adjustment of gripper finger pressure---------- 25
[14] Adjustment of simultaneous gripping---------- 26
7. Adjustment of register unit---------- 28
[1] Adjustment of double grippers of swing---------- 28
[2] Adjustment of spring tension for swing gripper---------- 28
[3] Adjustment of gripper opening lever---------- 28
[4] Adjustment of swing gripper opening---------- 29
[5] Adjustment of swing gripper closing---------- 29
[6] Adjustment of simultaneous gripping of swing gripper---------- 29
[7] Adjustment of scale plate height---------- 30

[8] Adjustment of swing gripper holding stopper---- 30
[9] Adjustment of reference position and parallelism of front lay---- 30
[10] Adjustment of front lay start timing---- 31
[11] Adjustment of front lay holding stopper---- 31
[12] Timing adjustment of side lay unit---- 31
[13] Adjustment of paper guide timing---- 31
8. Adjustment of delivery unit---- 33
[1] Tension adjustment of delivery chain---- 33
[2] Adjustment of delivery gripper finger pressure---- 33
[3] Adjustment of delivery gripper opening lever---- 33
[4] Adjustment of positions of CD gripper and impression cylinder ---- 34
[5] Adjustment of gripping timing of CD gripper---- 34
[6] Adjustment of timing for jogging delivery guide---- 34
[7] Adjustment of delivery board automatic lowering mechanism---- 35
[8] Adjustment of rocking end guide operation lever---- 35
[9] Adjustment of sensitivity and position of delivery paper height detection sensor---- 35
9. Adjustment of ink unit ---- 36
[1] Ink roller drive timing---- 36
(1) Timing for oscillating the oscillation roller---- 36
(2) Adjustment of symmetrical oscillating of oscillation roller---- 36
(3) Ductor roller duting timing---- 36
[2] Adjustment of ductor roller pressure---- 37
(1) Adjustment of contact pressure with oscillation roller ---- 37
(2) Adjustment of contact pressure with fountain roller ---- 37
[3] Adjustment of ductor roller stopper---- 37
[4] Adjustment of form roller ON/OFF air cylinder piston rod---- 38
[5] Adjustment of form roller ON/OFF cam position---- 38
[6] Adjustment of oscillating for No.1 form oscillation roller---- 38
[7] Adjustment of fountain roller brake---- 39
[8] Inspection and adjustment of roller pressure---- 39
(1) Adjustment of pressure between form roller and oscillation roller---- 39
(2) Adjustment of pressure between form roller and plate---- 39
[9] Adjustment of cleaner attachment---- 40
[10] Adjustment of ink feed handle brake---- 40
[10] Zero adjustment of ink key blade (ink key controller)---- 40
10. Adjustment of damping unit---- 41
[1] Adjustment of form roller/metering roller ON/OFF air cylinder---- 41
(1) Adjustment of piston rod---- 41
(2) Adjustment of speed controller---- 41
[2] Adjustment of form roller/metering roller ON/OFF cam position---- 41
[3] Adjustment of setting for bridge roller---- 42
[4] Inspection and adjustment of roller pressure---- 42
(1) Pressure adjustment between form roller and oscillation roller---- 42
(2) Pressure adjustment between form roller and plate surface---- 42
(3) Pressure adjustment betwen metering roller and oscillation roller ---- 42
[5] Adjustment of pressure between metering roller and fountain roller---- 43
[6] Adjustment of water detection device---- 43

11. Adjustment of blanket washing unit---------- 44
[1] Parallel pressure adjustment between blanket cleaning roller and squeezing roller ---------- 44
[2] Parallel pressure adjustment between blanket cleaning roller and mesh roller ----------44
[3] Parallel pressure adjustment between blanket cleaning roller and blanket---------- 44
[4] overall pressure adjustment blanket cleaning roller and blanket---------- 45
[5] Adjustment of stopper---------- 45
[6] Maintenance of washing solvent nozzle---------- 45
12. IKC service manual (ink key controller)---------- 47
13. EPS service manual (B452A)---------- 53
14. Data section(drawings and conversion table)---------- 83

NOTES:

(1) NOP-S (non-operation side) as used in this manual means the drive side of the motor.

(2) SI unit indication

In compliance with the new Measurement Law, units of measurement are based on SI system. Figures and units in { } are shown for reference only.

Precautions on Installation and Operation of Machine

1.Precautions on installation and operation of machine

[1] Installation environment

The installation location and its environment will greatly influence the productivity of the press and the quality of the printed pieces. Please keep the following points in mind when selecting the location for installation.

(1) Avoid direct sunlight. If the press is used for any extended periods under direct sun light, it may cause the following:

- Dampening solution can run low and may cause toning problems.
- Ink may get too soft, causing characters and thin lines to thicken.

(2) Avoid dust or vibration. If the press is operated for extended period at a location where dust is present or where the floor vibrates, it may cause the following:

- Dust sticks to the ink, plate surface, and blanket cylinder causing uneven printing surface.
- When dust adheres to machine parts, it can cause the machine to malfunction.
- When the machine vibrates, it may cause an irregular supply of dampening solution and ink, as well as inconsistent cylinder pressure of plate cylinder, blanket cylinder, and impression cylinder. This in turn may result in poor print quality and malfunction of machine parts.

(3) Avoid extremes in temperature or humidity. Operating for extended hours under extreme temperature or humidity may cause the following:

- The quality of paper stock, paper feed and/or paper delivery may be interrupted.
- Ink may become too soft or too hard, leading to poor print quality.
- The ideal operating temperature is 18℃-25℃, and the ideal humidity is 50%-60%.

(4) Do not place the press too close to air vents of air conditioning units. Operating for extended hours near air vents may cause the following:

- The paper quality may deteriorate, causing errors in paper feed and/or delivery.
- The dampening solution supply may become uneven and cause poor printing quality.

(5) Provide at least 50 cm (20″) of working space on the NOP-side of the machine.

This working space is needed for daily maintenance and repairs.

[2] Power Supply

Supply voltage and current must meet the following requirements:

- Supply voltage must be within 200/220 voltage, 3 phase, 60A. In case the supply voltage is unstable, use a stabilizer.
- Avoid multiple wiring from a single outlet.
- Use the service of a reputable electrical contractor for installation.

[3] Installation Precautions

Be sure to follow the points below when installing the press.

- Never operate the press while a cover or protector is removed.
- Never tamper with safety components.
- Keep your hands away from the inching switches when you clean a unit by using inching operation.
- When you are operating the press with another person(s), always confirm both verbally and visually that the other person is clear before starting the press.
- Turn OFF the power when you check electric circuits.
- Rotate the press by inching to confirm nothing is wrong. Periodically oil the specified locations.
- Clean the components according to the maintenance procedure at the end of the day.
- Install the press on a solid foundation to prevent movement and possible accidents.

Example of foundation work

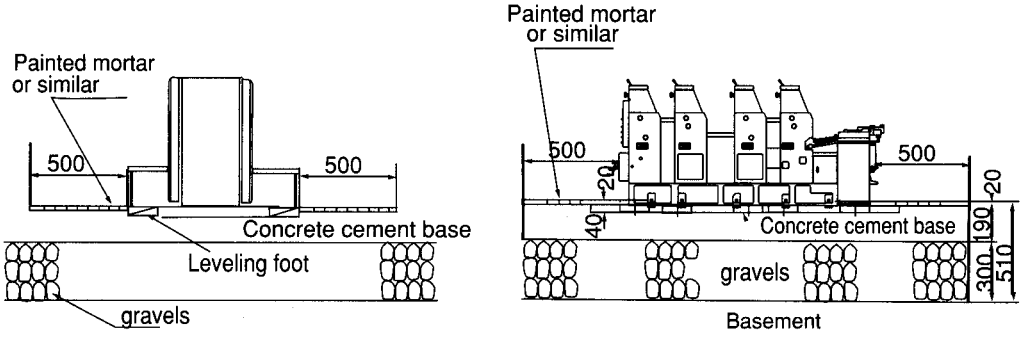

* Water ciculation device and ink key control device requires additional 800 mm where they are installed.

[4] Carrying in the machine

Use utmost care when carrying in the machine. Observe safety precautions where required and refer to the following figures for lifting and fork insertion positions.

(1) Method of carrying in the machine.

A. When lifting the machine using a crane

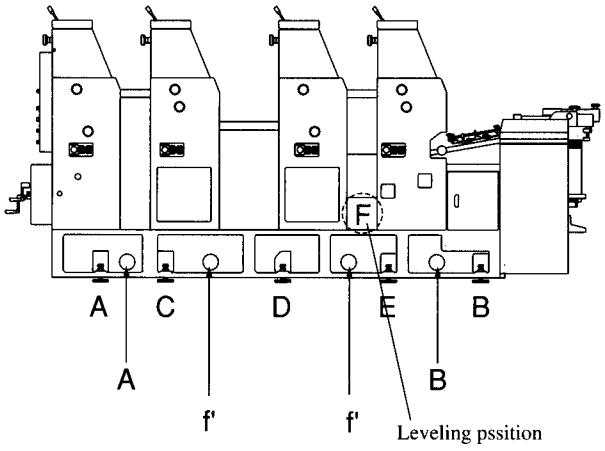

* Pass a round steel bar (80 mm in diameter) through the hole of the bed frame shown in Figure A and Figure B and secure a stopper collar on both ends of the steel bar.Set a steel wire rope round the steel bar, lift the press only high enough to ensure that the machine is perfectly balanced before moving it.

NOTE: For lifting the machine, use only the hole shown in Figure A and Figure B.

B. When carrying in the machine using a fork lift

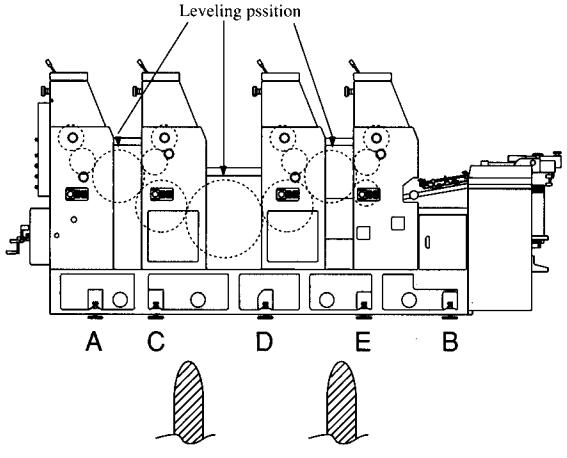

* To lift or lower the machine, insert the fork of the fork lift into the position shown in Figure A and Figure B.

NOTE: Insert the fork only into the position shown in Figure A and Figure B.

Trial operation

[5] Leveling the machine

Leveling the machine, and keeping it level, is one of the primary essentials for proper operation over a long period of time.

(1) Accuracy of level

Use a precision level graduated to at least **0.02/100mm** (1meter) accuracy.

* Adjust the level errors in the direction of the cylinder up to within plus or minus 1division on the scale.
* Adjust the level errors in longitudinal direction of the machine up to within plus or minus 3 divisions on the scale.

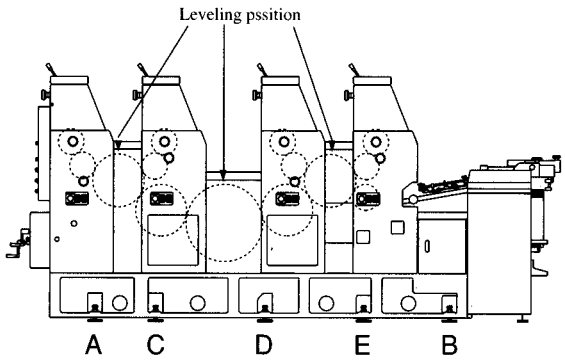

Points for checking the level

* No.1 and No.2 impression cylinders require the level check, as shown in the figure. Place a level at the center of the effective printing area of the cylinder. For leveling the machine in longitudinal direction, place the level at the position F of the OP-Side/NOP-Side as shown in the figure below, a total of four locations, and adjust the level as appropriate.

(2) Method of leveling

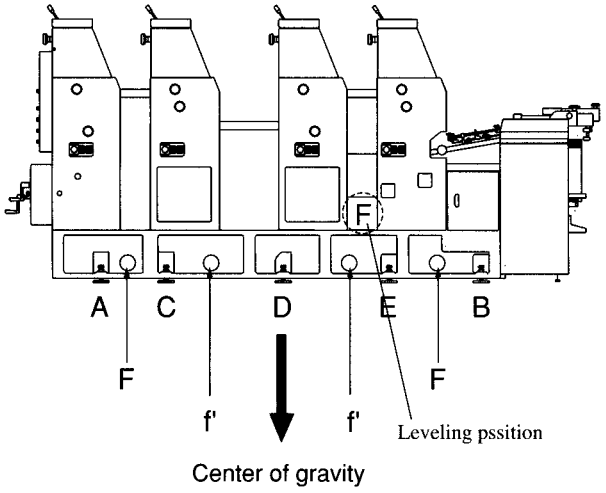

F Hole for inserting shaft for transportation (8 mm diameter)

f' This hole cannot be used for inserting the shaft for transportation.

Method of adjustment

* Place a leveling plate under the jack screw, and turn the jack screw to raise the machine bed approximately within 0.5 cm from the floor.
* For level adjustment, use jack screws A and E (at 4 locations including those on the non-operation side), as shown in the figure.
* Adjust jack screws C, D and B while checking the level on the cylinders.
* Verify that each jack screw carries an equal load.

NOTE 1:

After the level adjustment, check that each jack plate does not have play and tighten all lock nuts.

NOTE 2:

When adjusting the jack screw of the feeder unit, check that the load of the feeder unit is applied and that the machine level does not change.

2. Trial operation

[1] Wiring to the machine

(1) Wiring of the source power supply

A 3-phase, 200/220,60A source power supply is required.

For the source power supply other than the above, a separate transformer is required for setting.

(2) Wiring to additional equipment

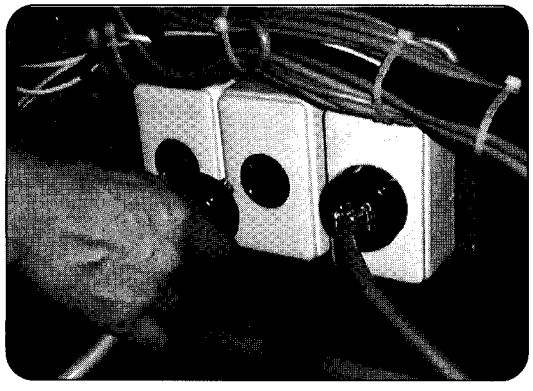

* Connect the power plug of the compressor, water circulating system, and decurler into the connector terminal provided at the center of the bed frame on the NOP-S side.
* Connect the water level detection wire to the defoaming tank (2 locations).

NOTE: After the power plug is connected, be sure to check that the plug is turned clockwise and locked.

(3) Wiring to the ink controller

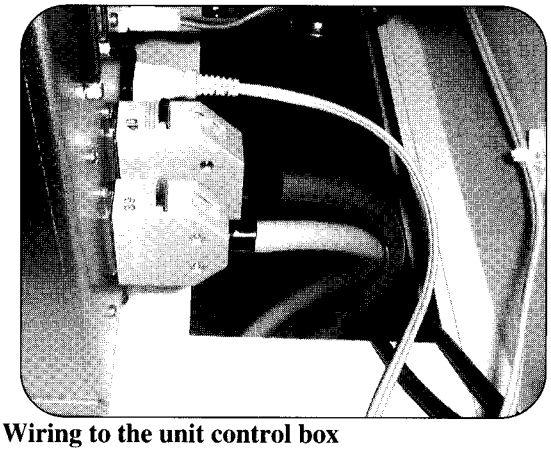

* Connect the small and large connectors to the connector terminal provided at the center of the machine frame on the NOP-S side.

NOTE: After the connectors are secured, tighten the lock screws.

(4) Wiring to the unit control box

Refer to the wiring instructions of the unit conrol box contained in the service manual (electric edtion)

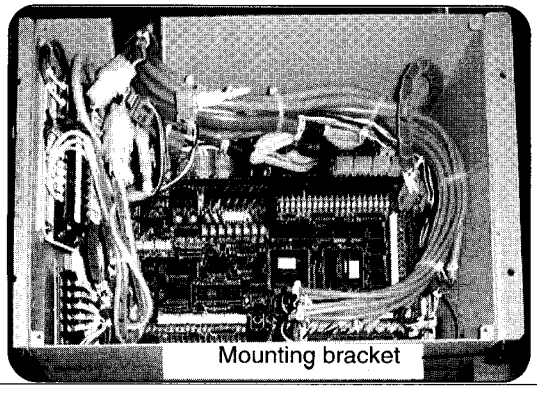

After the wiring has been completed, use a bracket and install the relay unit box on the step base, as shown in the figure.

[2] Piping

(1) Piping to the water circulating system

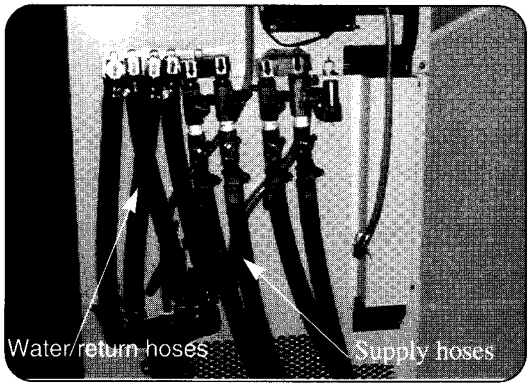

* Connect the water supply hose and the drain hose respectively as shown in the figure. After the connection, be sure to clamp the hose with hose bands.

NOTE: Use a hose cut to a required length. Do not roll the hose and connect it.

(2) Piping to the compressor and decurler

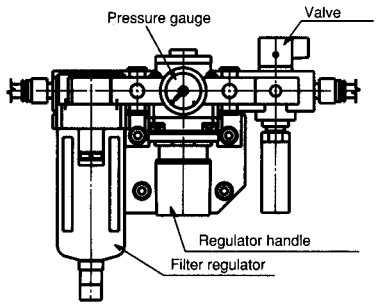

* Connect the compressor hose to the regulator valve unit.

* Connect the decurler hose to the main body of the decurler.

[3] Checking the electricals

(1) Checking the phase of the power supply

Check that the pump rotates in the specified direction.

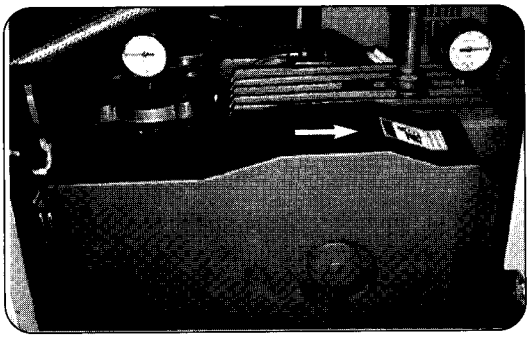

NOTE: Before changing the power supply phase, be sure to shut off the power circuit breaker switch.
This machine is driven by an inverter, and always rotates in the forward direction.

(2) Inspection and adjustment of supply voltage

Run the machine at high speed, start the pump, and check that the supply voltage is the specified voltage (200 / 220 volts).

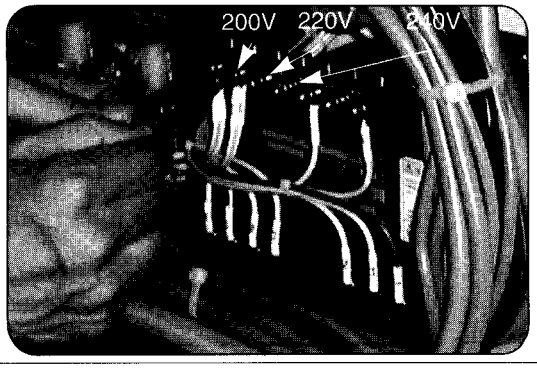

*** (For machines with export specifications only)**
In case a separate transformer is installed, change the primary tap, and check the supply voltage with the secondary tap.

NOTE: Change to the tap which corresponds with supply voltage on the transfomer in the control box as shown in the figure.

(3) Inspection of control voltage

Run the machine at high speed, start the pump, and verify that the the control voltage 24 volts DC is within 24 volts DC to 27 volts DC at the terminal in the control box on the non-operation side.

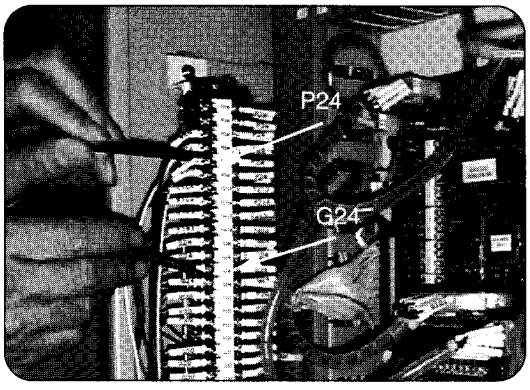

Method of inspection and adjustment

If the control voltage is less than 24 volts DC, change the secondary tap of transformer from 18 volts DC to 20 volts DC.

If the control voltage is 27 volts DC or more, change the primary tap of the transformer or recheck the supply voltage.

(4) Inspection of sensitivity of double sheet detection sensor

Check the reference voltage (6.5 volts) between the pins of the double sheet detection board in the control box on the non-operation side.

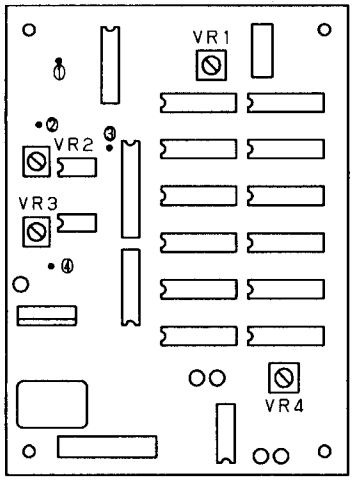

Method of adjustment

Turn the volume VR2 and set the reference voltage to 6.5 volts, as shown in the figure.

(5) Checking the operation of safety cover and safety bar

Check that the microswitch actuates positively when the safety cover is opened less than 30 mm.

Method of adjustment

Adjust the cam position or the switch bracket so that the cam positively presses the actuator of the switch when the safety cover is opened less than 30 mm.

[4] Setting the compressor pressure

Regulator

Set the pressure of the compressor for accurate air cylinder actuation.

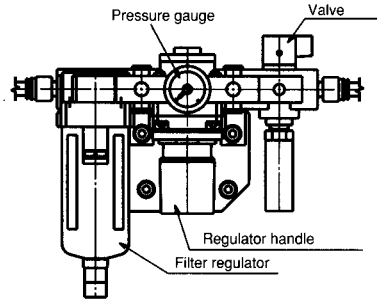

Set value

Regulator pressure	0.6 MPa [6 kgf/cm]

Method of adjustment

Pull the handle downward and release the lock. Turn the handle clockwise or counterclockwise to increase or decrease the pressure. After the pressure setting, push the handle upward and lock it.

[5] Setting the pump pressure

Set the suction pressure and exhaust pressure for feeding and delivering printing paper ranging from thin to thick.

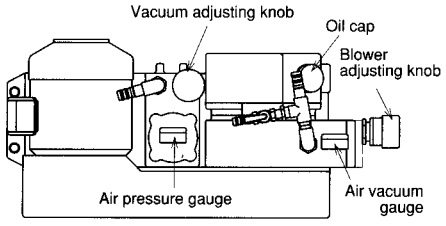

Set value

Paper feeding sucker	50 Kpa [40 cmHg]
Paper feeding blower	50 Kpa [0.5 kgf/cm]

Method of adjustment

Set the main blower and the separator blower (spray and shower)to "0", and press the pump button.
(Do not turn ON the sheet feeding and clutch buttons)
Set the above paper feeding blower using the controller of the pump main body.
Do not adjust the pump excessive pressure.

NOTE 1: Check the filter cover screws if it loosens before the pressure adjustment.

[6] Lubrication and idling

After the machine is installed, leveled and adjusted properly, idle the machine sufficiently while avoiding an overload being applied to the machine.

(1) Lubrication

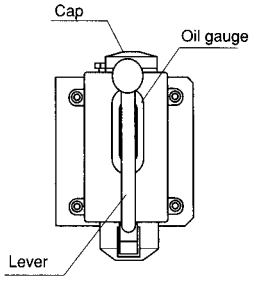

* Sufficiently lubricate the machine where required. The oil in the piping may evaporate leaving air bubbles in the piping during transportation and storage.
Clean the points for hand oiling and lubricate sufficiently.

(2) Idling

Check the idling period on the revolution counter of the machine to avoid excessive use of the machine such as full speed.

Machine revolution counter	Max. printing speed
0 to 500000 sheets	8000 rph
500000 sheets or more	10000 rph

[7] Inspection at delivery and installation

After the installation, check the following items to provide uninterrupted trial operation and printing guidance.

(1) Inspection of air cylinder components

Check for air leakage from the air hose joint and valve manifold.

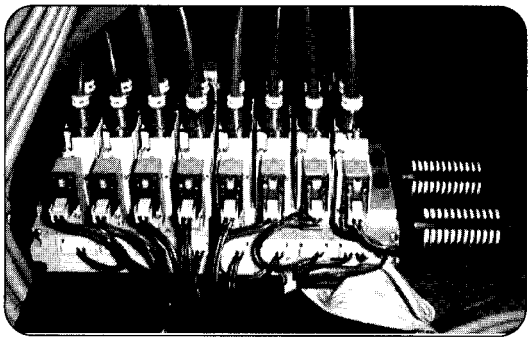

NOTE: In case of air leakage from the joint unit, cut off the hose 10 mm or so, and insert it.

(2) Inspection of plate clamping pressure

Clamp a plate to be used. Inspect and adjust the plate clamping pressure.

Refer to the item [9] Plate clamp adjustment of main unit.

NOTE: The clamping pressure is adjusted at the factory using a 0.2 mm thick metal plate. Readjustment is necessary if a plate of different thickness is used.

(3) Adjustment of feeder table lower limit proximity switch

Lower the feeder table. Verify that the feeder stops when the wheels of delivery table comes in contact with the floor surface.

NOTE: Check that the magnet switch and the magnet unit face each other in parallel, to change magnet unit position on the adjustment bracket.

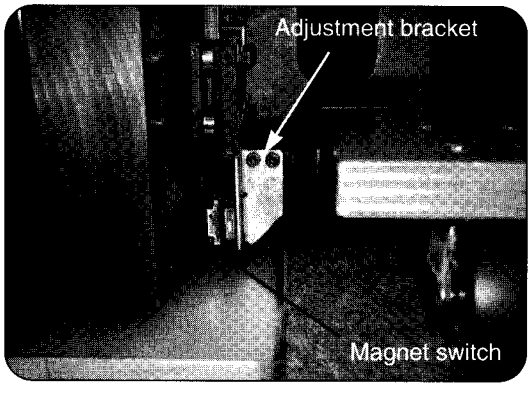

(4) Inspection and adjustment of roller pressure

Refer to the item [8] Adjustment of roller pressure of the inking unit and the item [4] Adjustment of roller pressor of the dampening unit.

NOTE: Distribute a suitable amount of ink up the roller, and inspect the pressure.

(5) Inspection of plate mounting and removing EPS unit

NOTE: Check the EPS all functions after the blanket installed on the cylinder.

Reference degree for each adjustmen

[8] Maintenance sheet

Model : B452/B452A Feeder section	Every 1Mos.	Every 3Mos.	Every 6Mos.	Every 1Yrs.	Every 2Yrs.	Every 3Yrs.
Sheet separator (replaced as needed)	X	XXX	XXX	XXX	XXX	XXX
Stream head drive joint			X			
Stream head break	X					
Rotary valve	X					
Rubber sucker foot (replaced as needed)	X	XXX	XXX	XXX	XXX	XXX
Pullout roller	X				XXX	
Feeder table tape	X				XXX	
Air pump	X					
Air pump filter				XXX		
Pile high drive break			X			
Double sheet detector bearing			X			
Register pull guide bearing	X					XXX
Pull guide roller drive gear			X			
Skid wheel		X				XXX
Dampening section						
Water form roller		X		XXX		
Water form roller bearing		X		XXX		
Water form roller gear		X		XXX		
Water metering roller		X		XXX		
Water metering roller bearing		X		XXX		
Bridge roller bearing		X		XXX		
Water reserved tank filter	X			XXX		
Ink unit section						
Ink form roller					XXX	
Ink form roller bearing					XXX	
Ink idle roller						XXX
Ink ductor roller						XXX
Ink idle/ductor roller bearing						XXX
Ink clean up blade (replaced as				XXX	XXX	XXX
needed)						
Ink form roller bracket drive lever	X					
Ink form roller bracket drive cam	X					
Ink key control fountain segment	X					
Ink key control fountain magnet sheet	X					
Main unit section						
Drive belt						XXX
Timing chain						
Blankets (replaced as needed)	XXX	XXX	XXX	XXX	XXX	XXX
Under blankets (replaced as needed)	XXX	XXX	XXX	XXX	XXX	XXX
Impression gripper finger		X				
Impression gripper finger tension			X			
Impression gripper camfollower	X				XXX	
E.P.S section						
Plate clamp tension	X					
Plate clamp snubber position	X					
Guide roller bearing		X				XXX
Delivery section						
Delivery table rail						
Sheet break wheel						
Deliver gripper chain (clean as needed)						
Delivery gripper bar (clean as needed)						
Delivery gripper camfollower						
Delivery paper stripper						
All photo sensor/encoder wheel						
Blanket cleaning section						
Blanket cleaning roller						
Roller bushing		X		XXX		
Air blower nozzle		X		XXX		
Solvent pump	X					XXX
Air cylinder part						
Compressor filter element					XXX	

X= Grease/Oil/Clean/Inspect/Adjust as needed
XXX=Replace as needed

3. Reference degree for each adjustment

(1) Set the point of reference to 45 deg.

This position is used as the reference for all timing adjustment.

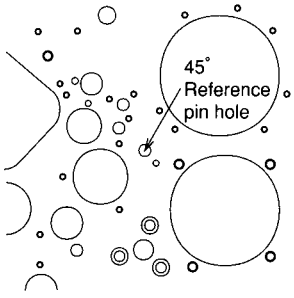

* The indicator of protractor shall be set at the instant the gauge pin contacts the swing anvil with the 12 mm diameter gauge pin being inserted from the NOP-S side and the machine rotated in forward direction.

NOTE: Protractor installed on the OP-S of feeeder drive shaft.

NOTE: Set the point of reference to "0" deg. for elctrical timing. (When the basic sensor LED comes on while the machine is turned in forward direction)

(2) Timing Table

Feeder unit

Sucker start	13.5	At feeder-side 260
Front lay start	4.0	
Pullout roller contact	89.0	
Sucker air run out	104.5	

Protractor of the feeder unit indicates the timing of the protractor installed on the feeder rotary valve.

Register unit

Sheet reaches at front stopper	265.0	
Swing gripper fingers close	347.0	
Swing start	3.5	
Side register start	317.0	
Side register finish	347.0	
Front stopper start	348.0	
Paper guide stop	265.0	
Paper guide release	345.0	

Machine unit

Swing gripper fingers	Close	347.00
	Open	45.25
1st Transfer cylinder gripper fingers	Close	44.75
	Open	210.75
1st Impression cylinder gripper fingers	Close	209.75
	Open	328.25
2nd Transfer cylinder gripper fingers	Close	327.75
	Open	12.25
3rd Transfer cylinder gripper fingers	Close	11.75
	Open	120.25
4th Transfer cylinder gripper fingers	Close	119.75
	Open	164.25
2nd Impressioncylinder gripper fingers	Close	163.75
	Open	56.25
Chain delivery gripper fingers	Close	55.75

NOTE:

* The simultaneous gripping degree (over lap degree) that the strip sheet is gripped by both cylinder gripper finger is 0.5 degree.

*For gripper angle adjustment, use a 0.05 mm thick paper.

Jigs for gripper opening adjustment

4. Jigs for gripper opening adjustment

To ensure accurate gripper opening, use the following jigs and adjust as required.

[1] Bearing for No.1, No.2 impression cylinder and No.3 transfer cylinder grippers

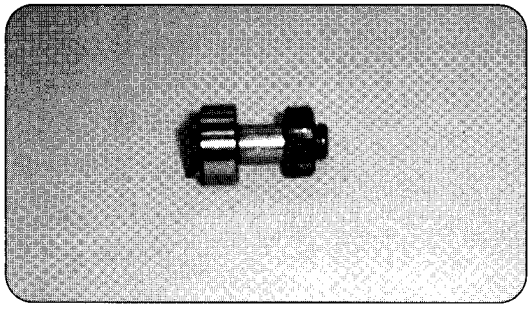

* As shown in the figure, use this bearing to adjust all finger pressure equal of the No. 1, No. 2 impression cylinder and No.3 transfer cylinder grippers.
* Remove the cam follower, and install the adjustment bearing.
* For adjustment, refer to the item [13] Adjustment of gripper finger pressure of each cylinder.

[2] Cam for adjustment of No.2 and No.4 transfer cylinder grippers

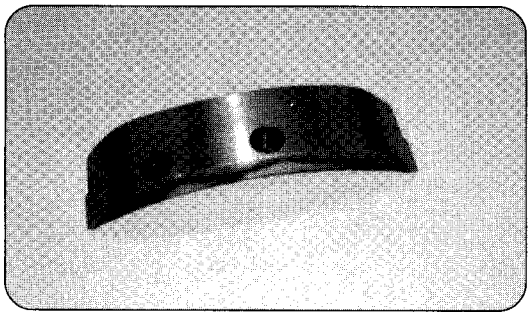

* As shown in the figure, use this cam to adjust all finger pressures equal of the No. 2, No. 4 transfer cylinder grippers.
* Set the gripper opening cam follower at the center of the adjustment cam.
* For adjustment, refer to the item [13] Adjustment of gripper finger pressure.

NOTE: When inspecting the pressure of both grippers A and B, adjust at the same degree of the protractor.

[3] Ajdjustment screw for gripper shaft adjustment

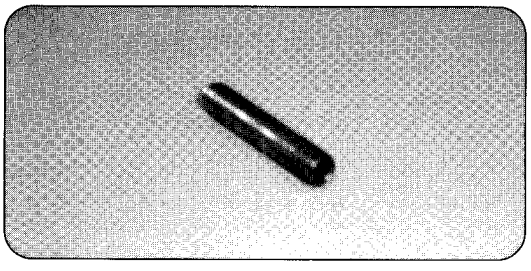

* As shown in the figure, use this adjustment screw to move the cam follower away from cam flange for the adjustment of cylinder grippers.

NOTE: After adjustment, make sure to remove the jigs (1) through (3).

[4] Lever positioning block gauge for swing gripper opening

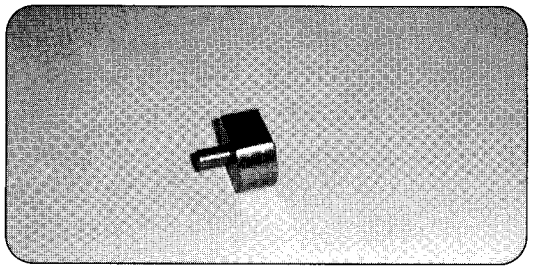

* As shown in the figure, use this block gauge to adjust the clearance between the cam follower of the gripper opening lever and the swing shaft.
* For adjustment, refer to the item [3] Angle adjustment for gripper opening lever.

Adjustment of feeder unit

[5] Cam positioning gauge for swing gripper opening

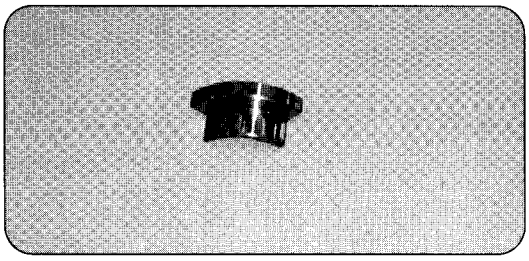

*As shown in the figure, use this gauge to adjust the clearance between the cam of the gripper opening lever and the swing shaft.

* For adjustment, refer to the item [5] Adjustment of swing gripper closing.

[6] Lever positioning gauge for delivery gripper opening

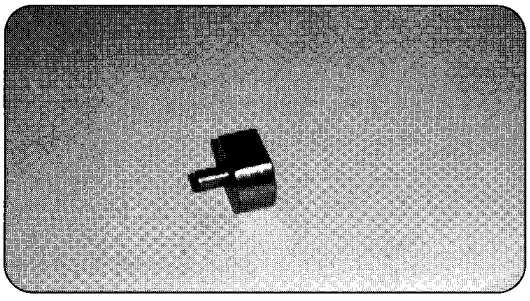

* As shown in the figure, use this gauge to adjust the angle of gripper opening lever.

* For adjustment, refer to the item [3] Adjustment of delivery opening lever.

[7] Pin gauge for the base point of reference degrees

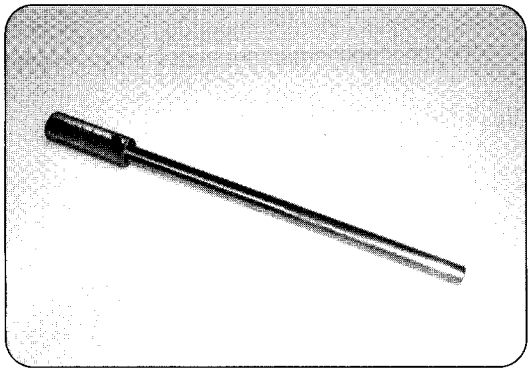

* Use this gauge to check the standard degree position where the pin gauge contacts the side of the anvil of the swing after inserting it into the reference pin hole on the NOP-Side frame of main unit.

NOTE 1: When the pin gauge is installed, use utmost care when turning the machine by hand.

NOTE 2: After the adjustment, make sure to verify that all jigs are removed from the machine.

5. Adjustment of feeder unit

Adjust the feeder unit to allow smooth feeding of paper at proper timing at speeds ranging from low to high.

[1] Tension adjustment of feeder unit driving chain

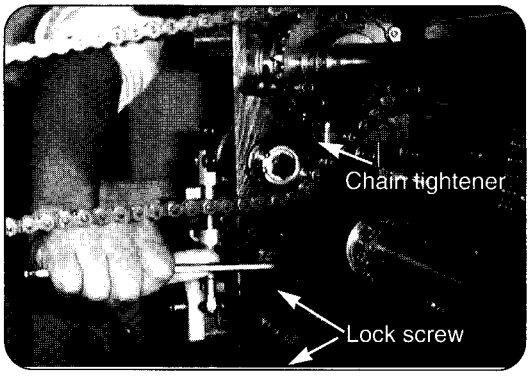

* Adjust the driving chain tension to ensure smooth driving of the feeder unit.

Method of adjustment

As shown in the figure, loosen the lock screw of the chain tightener.

Adjust the chain tension by moving the chain tightener vertically.

NOTE: The chain tension is appropriate if there is no slack in the chain when the feeder unit is at stop and the chain smoothly meshes with the sprocket wheel while the feeder unit is in operation.

[2] Tension adjustment of feeder head driving chain

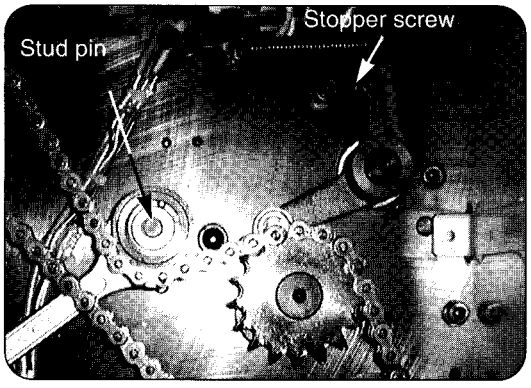

* Adjust the tension of the feeder head driving chain to ensure smooth driving of the feeder head unit.

Method of adjustment

As shown in the figure, loosen the lock screw inside the feeder frame and turn the eccentric stud pin (screw) for adjustment.

NOTE 1: The chain tension is appropriate if there is no slack in the chain when the feeder head is at stop and the chain smoothly meshes with the sprocket wheel while the feeder head is in operation.

NOTE 2: If the chain tension is weak, vibrations result, and improper sheet feeding results further.

[3] Tension adjustment of feeder table elevating motor chain

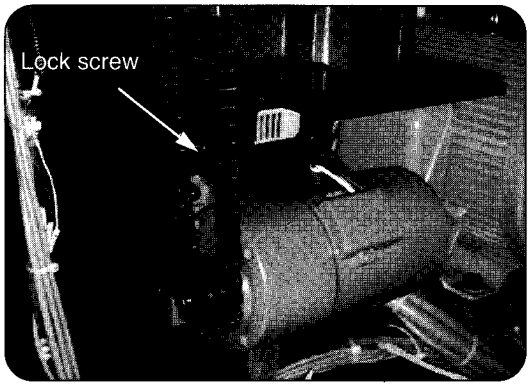

* Adjust the tension of the feeder table elevating motor chain to ensure smooth elevation of the feeder board.

Method of adjustment

As shown in the figure, loosen the lock screw of the motor base and move the motor base vertically for adjustment.

NOTE: The chain tension is appropriate if there is no slack in the chain when the feeder table is at stop and the chain smoothly meshes with the sprocket wheel while the feeder table is in operation.

[4] Adjustment of feeder head brake

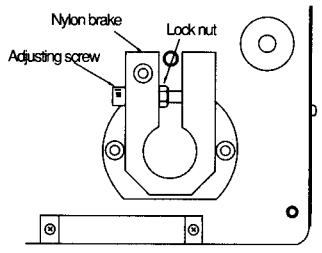

* In case pulsation generating in the drive shaft of the feeder head, adjust the brake for smooth rotation of the drive shaft.

Method of adjustment

As shown in the figure, tighten the adjustment screw.

NOTE: Do not tighten the adjustment screw excessively.

[5] Brake adjustment of feeder board raising unit

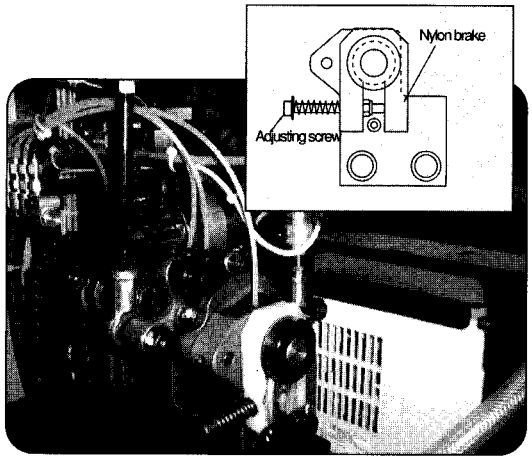

* Adjust the brake to prevent the feeder board from raising or lowering by inertia when the UP/DOWN switch of the feeder board is turned OFF.

Method of adjustment

As shown in the figure, tighten the adjustment screw.

NOTE: Make sure that the feeder board does not lower by inertia when the feeder board UP/DOWN switch is turned OFF.

[6] Adjustment of timing of feeder board raising crank rod

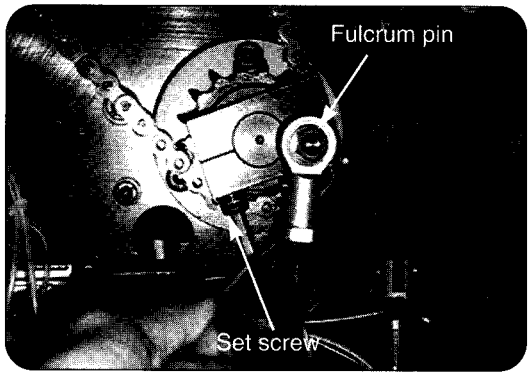

* Adjust the length and timing of the crank rod to ensure accurate feeder board raising which follows the sheet feeding at all speed ranges.

Method of adjustment

As shown in the figure, turn the feeder unit in forward direction using the manual handle, stop the second blower of the feeder head at the lowest position, loosen the set screw of the fulcrum pin bracket, and adjust the fulcrum pin of the crank rod at the position of 3 o'clock.

NOTE: Before adjustment, it is necessary to inspect that there is no slack in the feeder head driving chain.

[7] Adjustment of air cylinder piston rod of feeder table raising mechanism

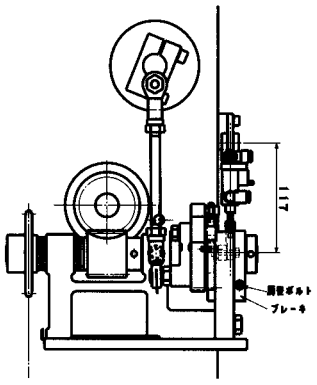

* Adjust the air cylinder piston rod to ensure accurate pawl ratcheting for feeder table raising which follows paper feeding.

Method of adjustment

As shown in the figure, loosen the nut of the piston rod and turn the rod end to adjust the distance between the drive pawl and the ratchet wheel to 1 mm.

NOTE 1: Adjust the piston rod when air cylinder is ON.

NOTE 2: Make sure to check that the detection sensor LED comes on when air cylinder is OFF.

[8] Adjustment of paper height detection sensor position

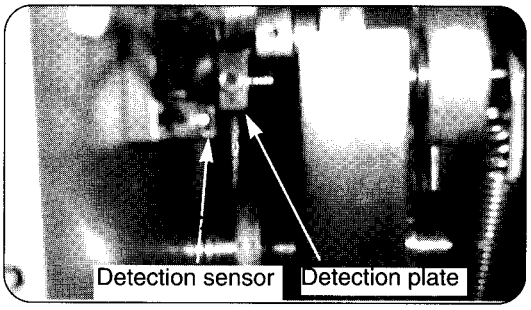

Method of adjustment

*As shown in the fegure, set the detection plate to provide a clearance 0.5mm against the detection sensor.

* Adjust the sensor position so that the top sheet of feeder board stops raising 6 mm below the top of front lay at both conditions of the stream head adjustment knob "0" and the 6mm distance between sucker and the top sheet.

[9] Adjustment of feeder board upper limit detection limit switch

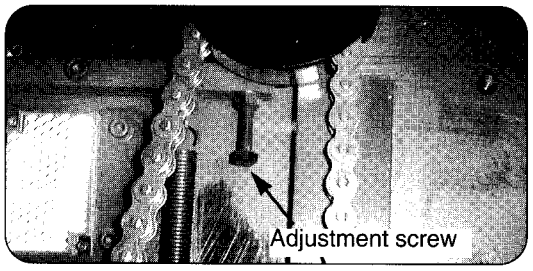

Method of adjustment

* As shown in the figure, adjust the distance between the lever and the hex screw to 25 mm.

* Set the limit switch at a position where the limit switch is actuated when the distance from the limit switch main body is 0.3 to 0.5 mm.

[10] Adjustment of feeder board lower limit detection limit switch

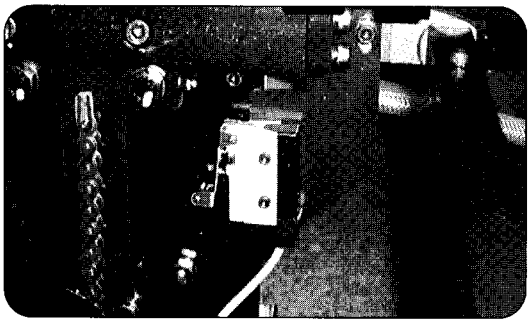

Method of adjustment

* As shown in the figure, move the limit switch bracket and adjust it to stop the feeder board lowering when the hook bracket of the feeder board reaches the lowest limit.

[11] Adjustment of feeder board (with paper stock) detection sensor position

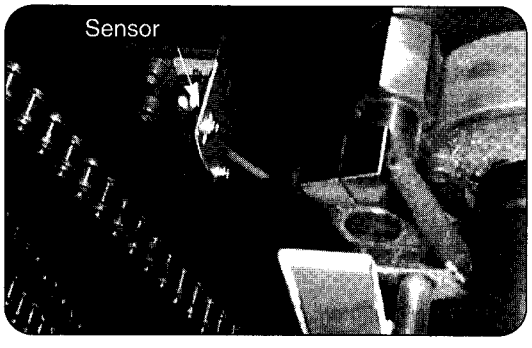

Adjust the sensor position so that the distance from the tip of the front lay to the top sheet of paper is 12 to 15 mm when the feeder board raising is stopped.

Method of adjustment

As shown in the figure, adjust the sensor bracket position in vertical direction.

NOTE: For adjustment, use a 0.1 to 0.12 mm thick paper as paper pile.

[12] Adjustment of front lay position

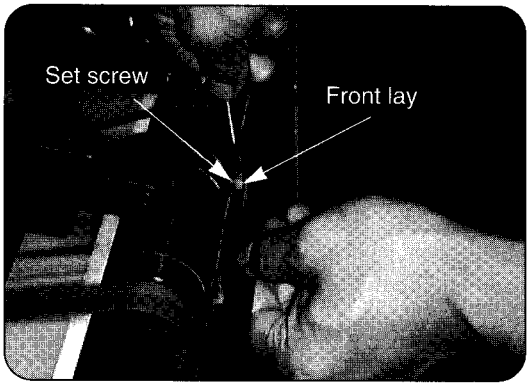

* Adjust the front lay position to allow sheets to be sent to the pullout roller in parallel.

Method of adjustment

* As shown in the figure, loosen each set screw of the front lay and adjust it so that the surface of each front lay is on the same line in parallel to the shaft.
* Adjust the support bracket position so that the front guide surface and the front lay surface are the same.

[13] Adjustment of front lay timing

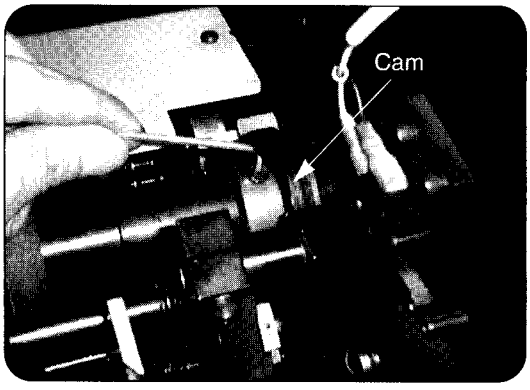

* Adjust the timing to 4 degrees of the protractor to allow the front lay to start forwarding at that timing.

Method of adjustment

As shown in the figure, loosen the set screw of the cam inside the NOP-S side frame, move the cam and adjust the timing so that the front lay starts forwarding at 4 degrees.

NOTE 1: Use a pick tester when checking the timing.

NOTE 2: The front lay timing starts 10 degrees behind the start of sucker.

[14] Adjustment of sucker angle

* Adjust the angle to allow the bottom surface of the sucker to be parallel to the sheet surface when the sucker is at the lowest position.

Method of adjustment

Loosen the lock screw of the sucker.

(It is impossible to adjust the sucker angle excessively so that the sucker retains by snubber.

NOTE: Normally, unnecessary to adjust the sucker angle.

[15] Adjustment of pullout roller pressure

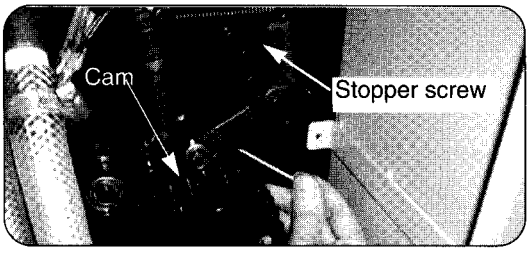

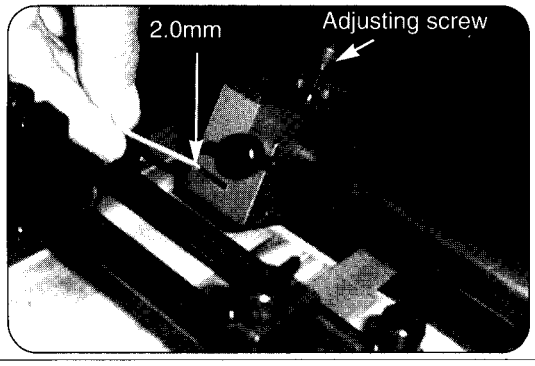

* Adjust the pressure so that the feeding sheet from the feeder head is fed straightly to the front lay.

Method of adjustment

* As shown in the figure, adjust the stopper screw to provide a 0.3 mm clearance between the bearing of the pullout roller driving lever on the outside of the NOP-S side frame and the bottom surface of the cam.
* As shown in the figure, use the pressure adjusting screw and adjust the clearance between the bracket and the lever to 2.0 mm at the conditon of pullout roller in not contact with the No.1 feed roller.

With the pullout roller in light contact with the feed roller, fix the bracket with the fixing knob, and loosen the pressure adjusting screw by a half turn.

[16] Adjustment of pullout roller timing

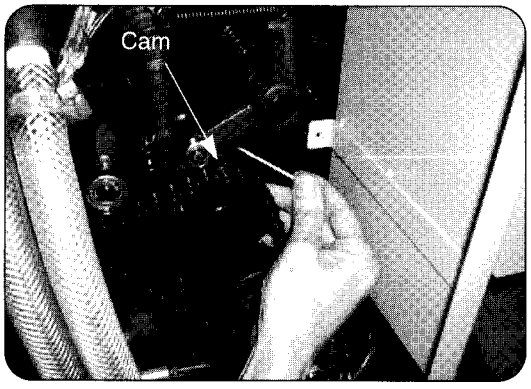

Adjust the timing that the pullout roller touches No1 feed roller when the lead edge of the sheet reaches the tangent of both rollers.

Method of adjustment

Loosen the set screw of the cam on the outside of the NOP-S side frame, move the cam and adjust the timing for the pullout roller to touch No.1 feed roller.

NOTE: Together with [15] Adjustment of pullout roller pressure, be sure to check the rotation and timing of right and left pullout rollers.

[17] Adjustment of sensor detection plate of double sheet detector

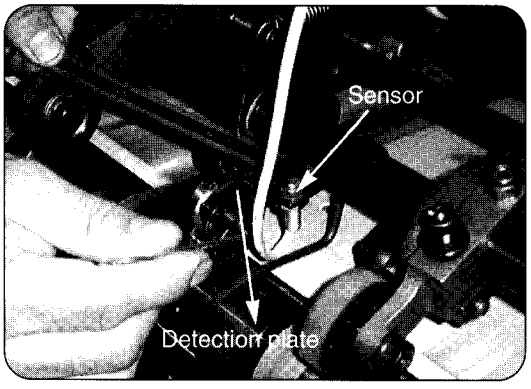

* Adjust the sensor detection wheel to ensure that the sheet feeding is stopped positively when the sensor detection wheel has detected double sheets,

Method of adjustment

As shown in the figure, when the detection wheel is hooked by the stopper (roll pin), move the detection plate to provide a 0.5 mm clearance between the detection plate and the sensor.

NOTE: Verify that the detection wheel rotates smoothly.

[18] Adjustment of position for vertical guide installation

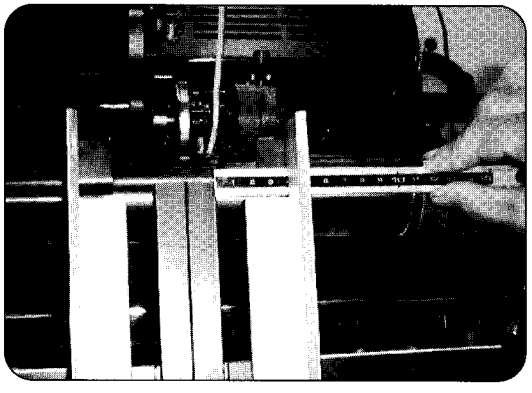

* Set the vertical guide to ensure that the top end is 0.5 mm wider than the lower end.

Method of adjustment

Move the vertical guide to the center as close to the center guide as possible, loosen the flat screw of the vertical guide and adjust the position.

[19] Parallel adjustment of feeder board

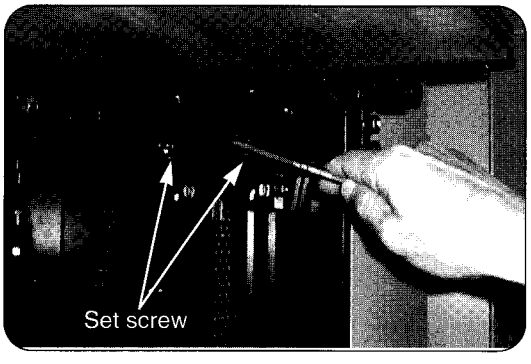

* To prevent moving sheets of stock on the feeder board during printing, adjust the parallel of the feeder board in vertical and lateral directions.

Method of adjustment

As shown in the figure, place the feeder board, loosen the set screw of the hook bracket, and adjust the parallel of the feeder board.

NOTE: After the adjustment, verify that the feeder board is free of play.

Adjustment of main unit

[20] Adjustment of feeder unit timing to the main unit

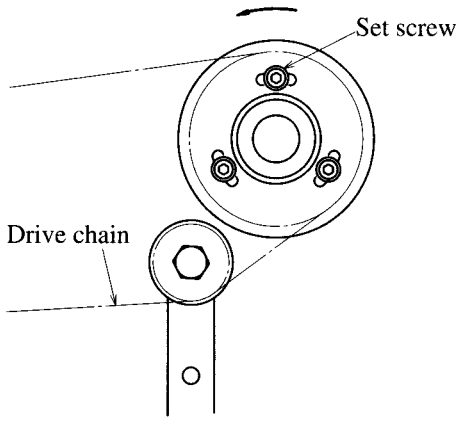

* Adjust the timing that the feeding sheet reaches the main unit at an accurate timing.

Method of adjustment

* As shown in the figure, loosen the set screw (3 locations) of the sprocket wheel inside the NOP-S side frame, turn the wheel hub and adjust the timing so that the sheet reaches the front lay at 265 degrees.

NOTE 1: Verify that the side lay plate should start rising when lead edge of sheet is approximately 25mm past the edge of the side lay plate.

NOTE 2: Before re-assembling the driving chain, set the set screw at the center of the slot.

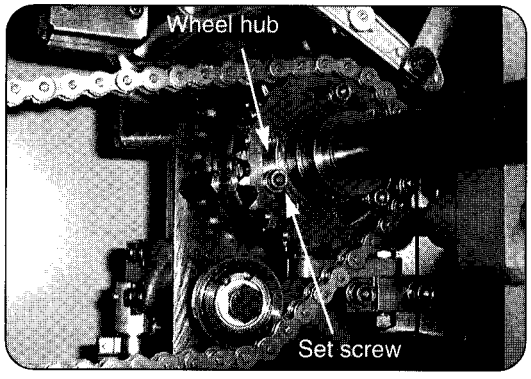

6. Adjustment of main unit

[1] Tension adjustment of the driving belt of the machine

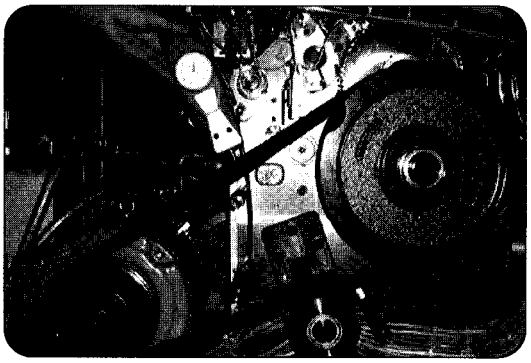

* Adjust the V belt with appropriate tension for smooth operation of this machine.

Method of adjustment

As shown in the figure, loosen the set screw of the tension pulley, move the tension pulley and adjust the tension so that the belt can be depressed 10 mm at the center of the V belt by pushing 50N {5kgf} strength.

[2] Position adjustment of impression cylinder and blanket cylinder

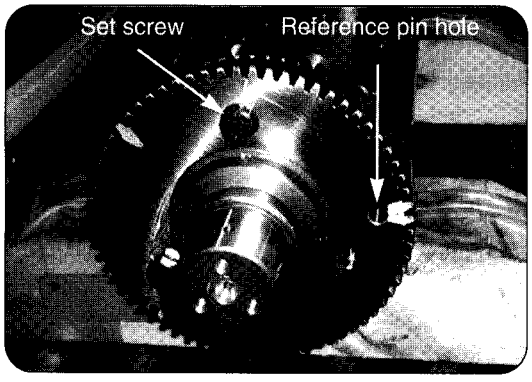

* Adjust the cylinder to provide the maximum printing surface of 350 mm and the gripper margin of 8 mm in the vertical direction at the reference position of the front lay.

Method of adjustment

Loosen the set screws (3) of the blanket cylinder gear, turn the machine with the crank handle of the machine, and adjust as follows:

(1) Set the front lay to the reference position (0 position).
(2) Apply ink to the gripper edge of the blanket.
(3) Print 2 to 3 sheets of paper by the cylinder ON operation.
(4) Check the gripper margin.

NOTE: Verify that the tip of gripper figer is not contacting the blanket.

[3] Position adjustment of blanket cylinder and plate cylinder

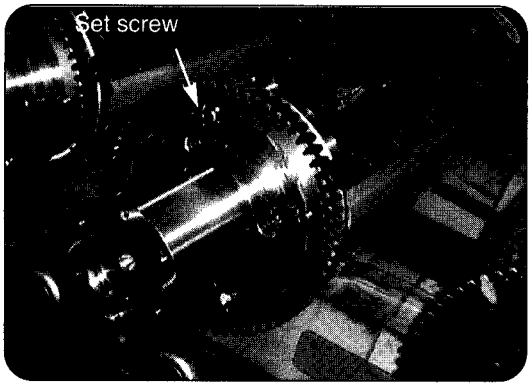

* In order to secure the maximum printing surface of 350 mm in the vertical direction by moving the micro vertical adjustment unit, adjust the plate cylinder to a position where the edge of the plate cylinder is advanced 3 to 3.5 mm from the edge of the blanket cylinder.

Method of adjustment

Loosen the set screws (4) of the plate cylinder and move the plate cylinder by the clamp lever to adjust the cylinder position.

(1) Apply ink to the gripper edge of the plate cylinder.
(2) Print 2 to 3 sheets of paper by the cylinder ON operation.
(3) Check the width from the plate cylinder edge to the edge of the transferred ink.

NOTE: Be sure to make this adjustment after [2] Position adjustment of impression cylinder and blanket cylinder is completed.

[4] Adjustment of cylinder pressure ON/OFF air cylinder

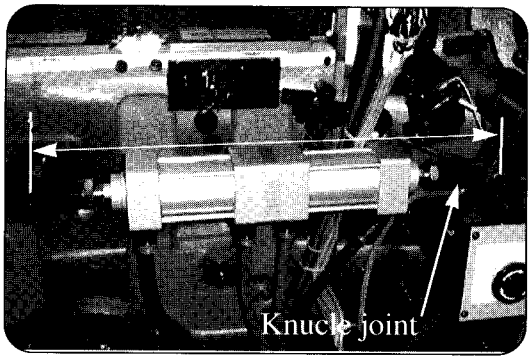

*Above air cylinder piton rod is retracted

* Adjust the air cylinder piston rod to assure cylinder pressure ON/OFF operation.
* As shown in the figure, adjust the piston rod stroke to 465mm when the piston rod is extended.
* Piston rod operating stroke: each 30mm to right and left

.

P-B cylinder pressure ON	435mm
B-I cylinder pressure ON	465mm

Method of adjustment

Remove the connecting pin of the drive lever bracket, loosen the lock nut, and turn the knucle joint for adjustment.

NOTE:

The stud pin side: for B-I cylinder pressure.

The connecting pin side: for P-B cylinder pressure.

[5] Adjustment of cylinder packing and gap between cylinders

Arrangement	Cylinder packing
Plate cylinder	0.2 (Plate)+ 0.2 (Under packing)
Blanket cylinder	Total 0.4mm 1.9 (Blanket)+1.0 (Under blanket)
* Adjust the cylinder with appropriate pressure.	Total 2.9mm

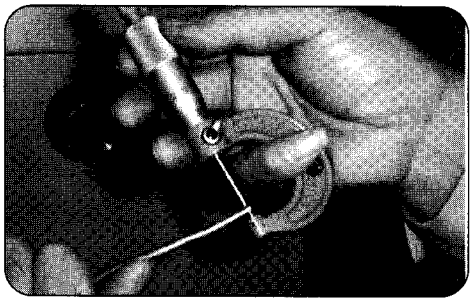

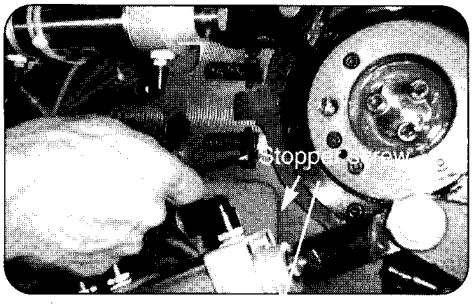

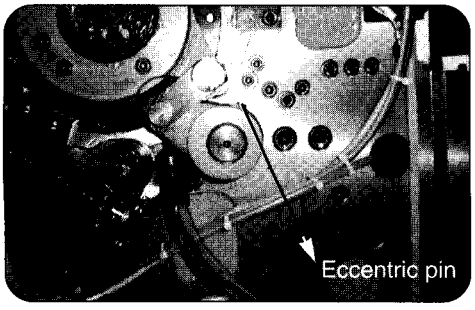

(1) Arrange the cylinder as shown in the figure.

(2) Adjust the gap of the cylinder as shown below.

	Gap	Printing pressure dial
Between P-B cylinders	3.15mm	
Between B-I cylinders	2.80mm	0
Method of adjustment		

[Adjustment of over all pressure]

(1) Set 3 cylinders ON using the manual switch/test switch.

(2) Use a lead bar and measure the gap between cylinders.

(4) Adjust the pressure using the printing pressure dial. After the adjustment, set the paper thickness adjustment dial to "0".

(5) Lightly contact the stopper screw to the flange, and fix the stopper.

[Adjustment of B-I parallel pressure]

(1) Loosen the set screw on the NOP-S flange of blanket cylinder, and turn the eccentric pin so that the gap is equal on both OP-S and NOP-S.

Clockwise turn: narrows the gap.

Counterclockwise: widens the gap.

NOTE: Turn the machine using the crank handle and insert a lead bar at the center of effective surface of the cylinder. Then, pull out the lead bar and measure the tip of the compressed lead bar.

[6] Adjustment of plate cylinder micro vertical adjustment unit

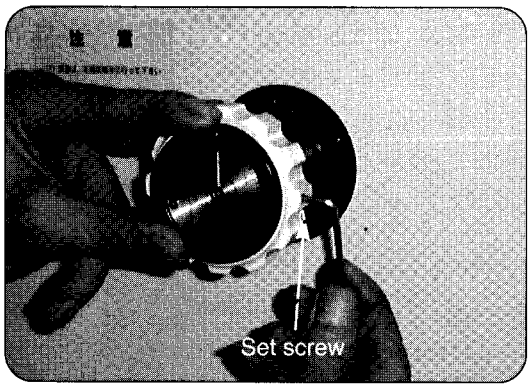

* Adjust the amount of the micro vertical adjustment to +/- 1.5 mm.

Method of adjustment

As shown in the figure, turn the micro adjustment dial fully to (+) side and (-) side, stop the dial at its symmetric position, loosen the lock screw and set the pointer of the dial to "0".

[7] Adjustment of plate cylinder micro horizontal adjustment unit

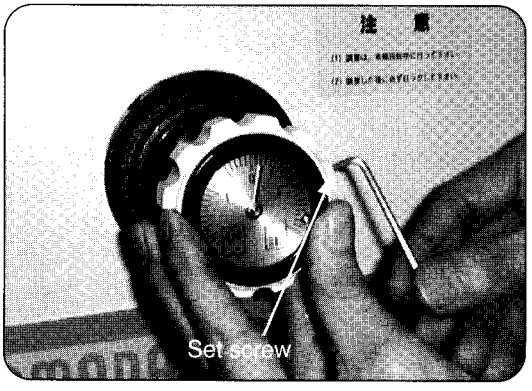

* Adjust the amount of the micro horizontal adjustment to +/- 2 mm.

Method of adjustment

As shown in the figure, turn the micro adjustment dial fully to (+) side and (-) side, stop the dial at its symmetric position, loosen the lock screw and set the pointer of the dial to "0".

[8] Position adjustment of plate clamp base

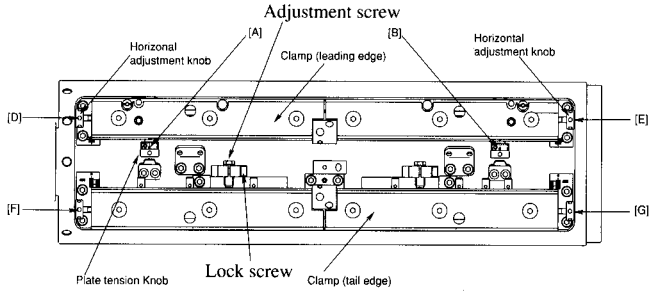

* Adjust the reference position of the plate clamp base from the plate cylinder edge.

Method of adjustment: Manual type plate cylinder.

(1) Leading edge clamp

Install the the clamp positioning plate at the position where both holes of the clamp positioning plate and the plate cylinder match.

Set the leading edge clamp at the position where the T type pin wrench passes through the plate clamp reference hole and the plate mounting hole as the reference of the clamp position.

(2) Tail edge clamp

As shown in the figure, loosen the lock screw of the positioning adjustment screw, turn the positioning adjustment screw and adjust the gap from the plate cylinder side wall to 4 mm at the advanced clamp position.

NOTE: For ESP clamp position adjustment, refer to the ESP adjustment manual.

[9] Adjustment of plate clamp

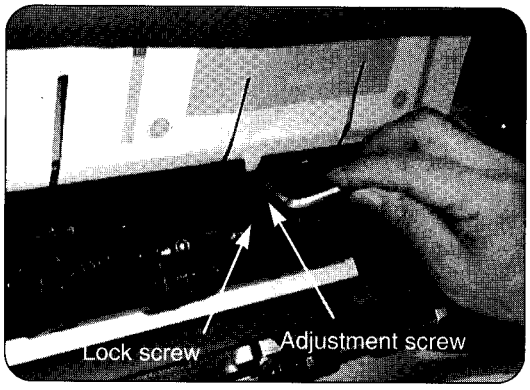

* Adjust the tightening clamp force and tension according to the thickness/length of the plate to be used.

(1) Adjustment of plate clamp strength.

After the force of all clamps adjusted to uniform level, check the plate shall not be pulled out.

Method of adjustment

As shown in the figure, insert the punched plate, turn the clamp wrench fully, loosen the lock screw, and adjust the plate clamp with the adjustment screw.

(2) Adjustment of plate settng tension.

NOTE: This applies only to the 394 mm long plate and the 404 mm long plate.

Method of adjustment

As shown in the figure, adjust the plate setting tension by the positioning screw of the plate tail clamp.

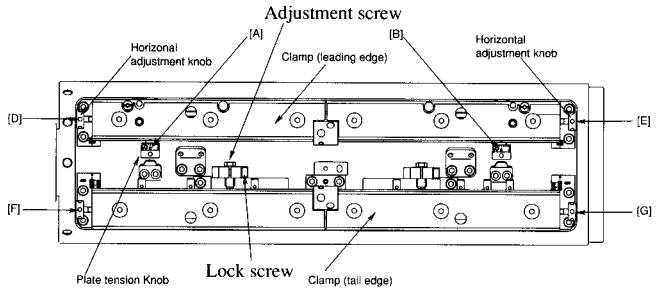

[10] Gripper arrangement layout

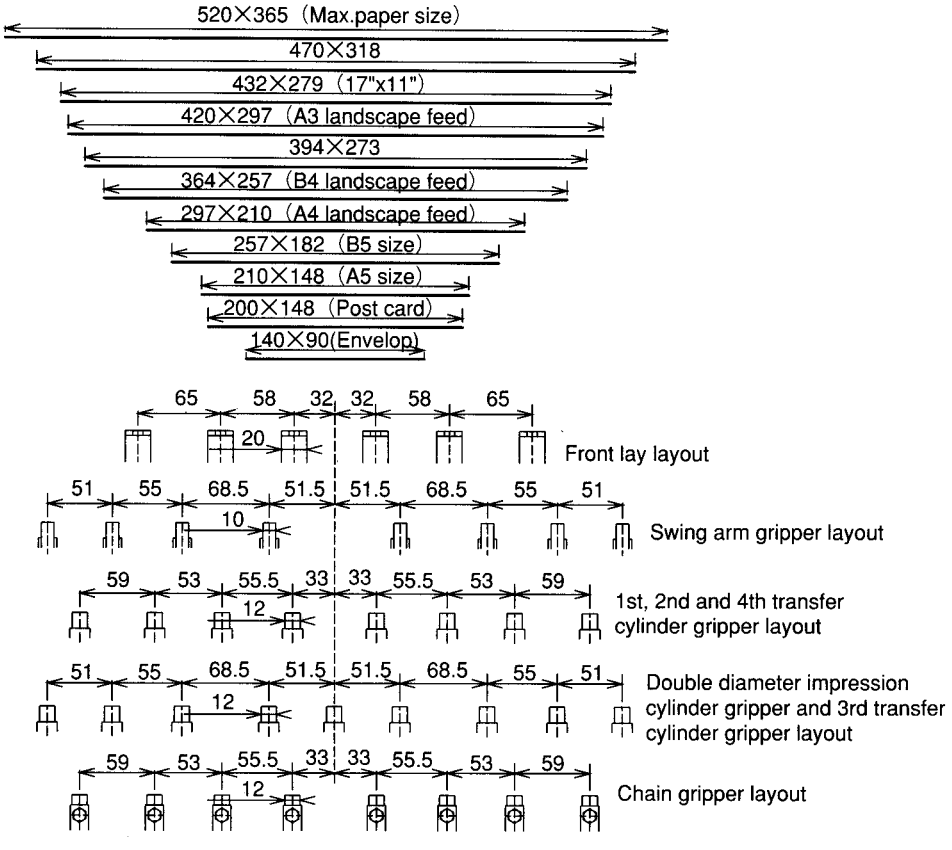

[11] Adjustment of double gripper fingers of each cylinder

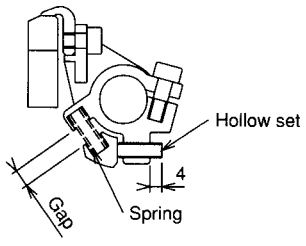

* Adjust the double gripper fingers so that uniform pressure is applied to the paper.

(1) Adjustment of double gripper finger of No.1 transfer cylinder

Method of adjustment

As shown in the figure, use the set screw and set the screw height to 4 mm as the reference.

(2) Adjustment of double gripper fingers of No.2/No.4 transfer cylinders

Method of adjustment

As shown in the figure, adjust the spring strength by the adjustment screw and set the screw height to 5.5 mm as the reference.

Then, pull the gripper finger by a spring scale and adjust the spring tension to 43-45N {4.4-4.6kgf} by the adjustment screw.

Use the screw to adjust the finger height and set the gap between the finger holder and the bracket to 2.5 mm as the reference.

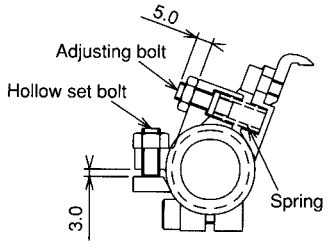

NOTE: Before adjusting the finger height, strength of the double finger spring must be adjusted.

[12] Adjustment of spring tension for cylinder grippers

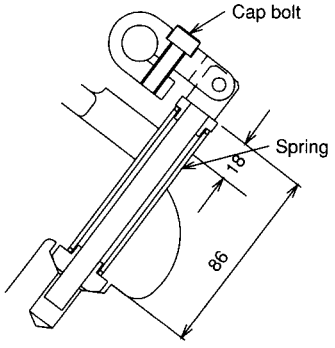

* Adjust the spring force so that the cam follower of the gripper lever always rotates along the transfer cam surface.

(1) Adjustment of spring tension for No.1 transfer cylinder gripper

Method of adjustment

As shown in the figure, loosen the cap screw of the lever and adjust the gap to 86 mm as the reference.

NOTE: Adjust the spring tension while allowing the gripper fingers to barely touch against the anvil.

(2) Adjustment of spring tension for impression/transfer cylinder

Method of adjustment

As shown in the figure, loosen the cap screw of the lever and adjust the gap between the spring rod and the bracket to 16 mm.

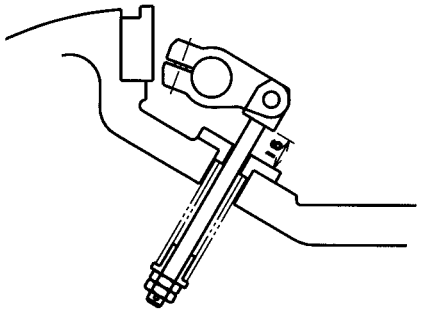

NOTE: Adjust the spring tension while allowing the gripper fingers to barely touch against the anvil.

[13] Adjustment of finger pressure

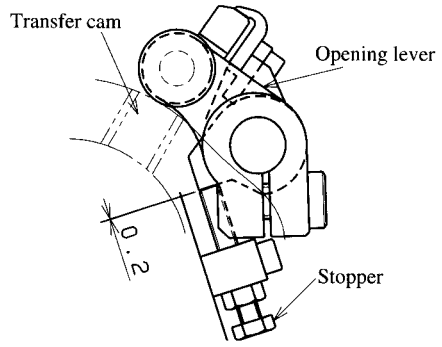

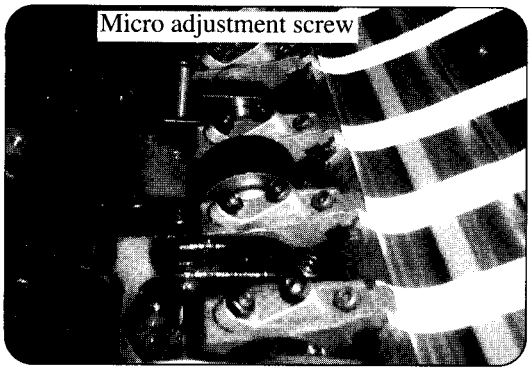

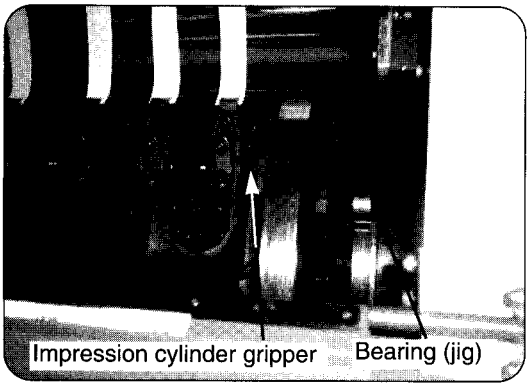

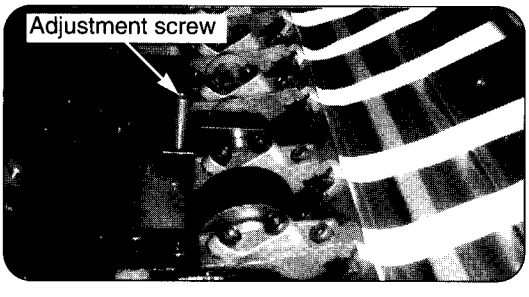

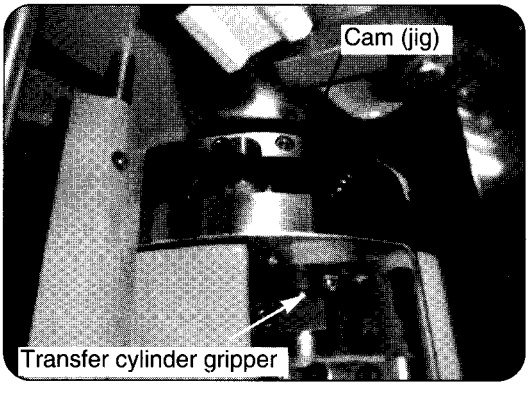

NOTE: Must adjust all fingers of gripper until uniform pressure is obtained.

* Adjust so that uniform pressure is applied to all fingers and that gripper fingers open and close properly.

(1) Finger pressure adjustment of No.1 transfer cylinder

Method of adjustment

(1) As shown in the figure, turn the machine by hand and set the cam follower of the opening lever to the slit of the split cam.

(2) Loosen the gripper opening lever. Then, put a 0.2 mm thickness gauge between the stopper and the stopper bracket and tighten the stopper screw until touching.

(3) Pinch a 0.04 mm thick paper strip between the finger and the anvil, and adjust the finger pressure by the micro adjustment screw so that the paper strip is pulled out with slight resistance.

(4) Lightly contact the cam follower of the opening lever to the slit surface of the split cam, and fix the opening lever, and remove 0.2 mm thickness gauge.

NOTE: Fix the opening lever, allowing the cam follower to slighty turn.

(5) Remove the 0.2 mm gauge, and verify that sufficient pressure is applied to the finger.

(2) Finger pressure adjustment of No.1, No.2 impression and No.3 transfer cylinder.

(1) Remove the cover of the cylinder opening, install the adjustment screw, and tighten the screw.

(2) Remove the cam follower of the gripper opening lever, and install the bearing (jig).

(3) Loosen the adjustment screw.

(4) Pinch a 0.04 mm thick paper strip between the finger and the anvil, and adjust the finger pressure by the finger pressure adjustment screw so that the paper strip is pulled out with slight resistance.

(5) Remove the bearing (jig), and verify that sufficient finger pressure is applied to the paper strip.

(3) Finger pressure adjustment of No.2 and No.4 transfer cylinder

(1) Remove the cover of the plate opening.

(2) Install the adjustment cam on the cam holder, turn the machine by hand, and set the cam follower of the gripper opening lever at the center of the adjustment cam.

(3) Pinch a 0.04 mm paper strip between the finger and the anvil, and adjust the finger pressure by the adjustment screw so that the paper strip is pulled out with slight resistance.

(5) Remove the adjustment cam, and verify that sufficient gripper pressure is applied to the paper strip.

NOTE: Regardimg jigs for gripper opening adjustment, refer to the item 4.

[14] Adjustment of simultaneous gripping

(1) Gripper margin of cylinder is 4.5 mm as the reference.

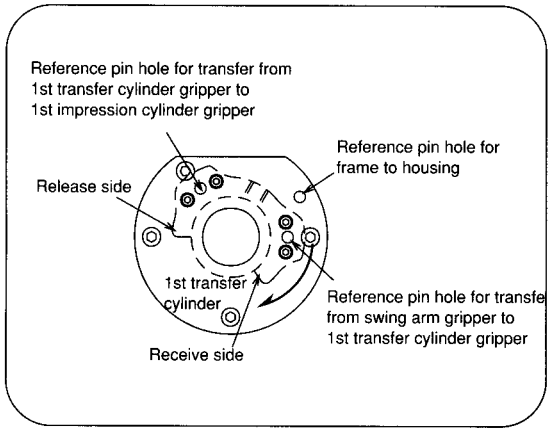

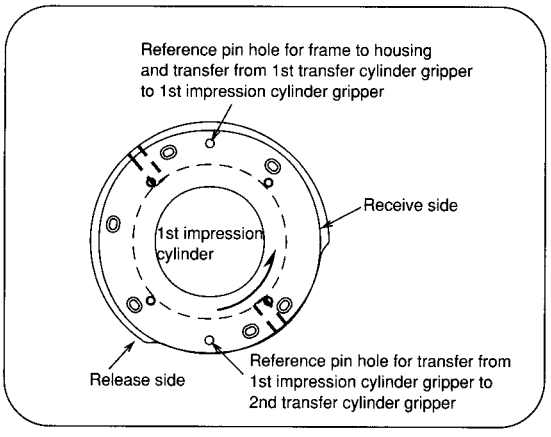

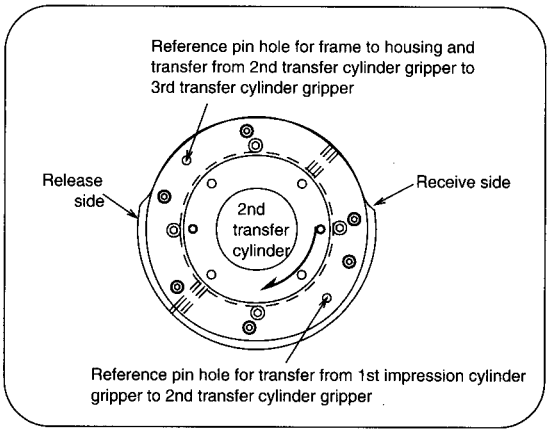

NOTE: Do not adjust the phase of the cylinder.
the cylinder phase has been adjusted in foctory.

(2) Adjustment of simultaneous gripping of cylinders
Adjust the simultaneous gripping so that sheet is gripped simultaneously by both cylinders at 0.5 degrees.

Method of adjustment of split cam

(1) Use the reference pin and install the cam at the reference position.

(2) Use a 0.04 mm thick paper strip and check the simultaneous gripping of 0.5 degrees.

(3) When adjusting the split cam, set the cam follower of the gripper opening lever at the center of the split cam.

(4) Loosen the set screw and adjust the cam while checking the movement in the reference pin hole.

NOTE 1: Before adjusting, the 45 deg. of reference must be confirmed.

NOTE 2: The cam must be adjusted to within 0.25 degrees of the reference degree of the transfer.

Method of adjustment of split cam transfer

(1) No.1, No.2, No.3 transfer cylinders
Clockwise turn of the receiving side cam decreases the angle of simultaneous gripping.

(2) No.1, No.2, No.3 transfer cylinders
Clockwise turn of the receiving side cam increases the angle of simultaneous gripping.

Adjustment of register unit

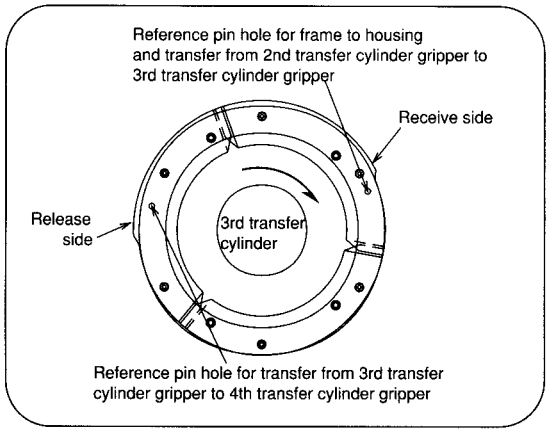
Reference pin hole for frame to housing
and transfer from 2nd transfer cylinder gripper to
3rd transfer cylinder gripper
Receive side
Release
side
3rd transfer
cylinder
Reference pin hole for transfer from 3rd transfer
cylinder gripper to 4th transfer cylinder gripper

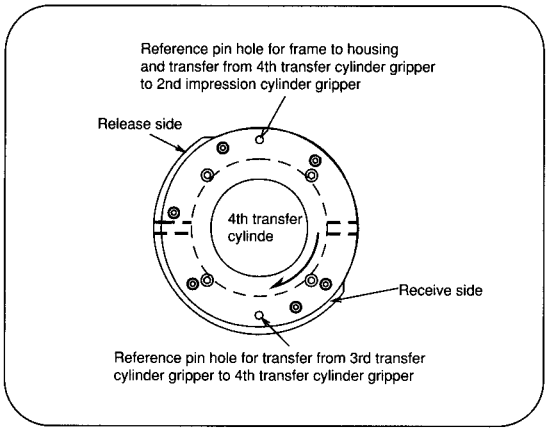
Reference pin hole for frame to housing
and transfer from 4th transfer cylinder gripper
to 2nd impression cylinder gripper
Release side
4th transfer
cylinde
Receive side
Reference pin hole for transfer from 3rd transfer
cylinder gripper to 4th transfer cylinder gripper

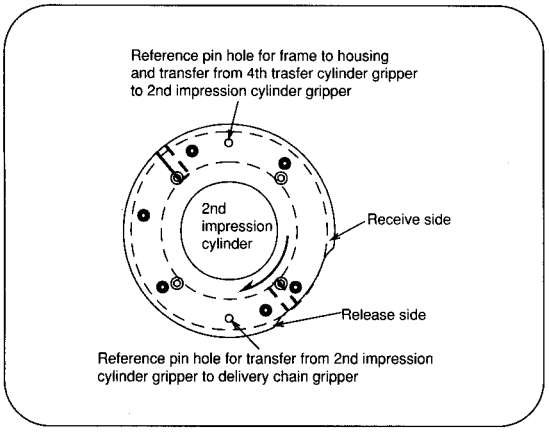
Reference pin hole for frame to housing
and transfer from 4th trasfer cylinder gripper
to 2nd impression cylinder gripper
2nd
impression
cylinder
Receive side
Release side
Reference pin hole for transfer from 2nd impression
cylinder gripper to delivery chain gripper

7. Adjustment of register unit

Adjust the timing of swing and front lay to obtain high registering accuracy from low to high speed.

[1] Adjustment of double gripper fingers of swing

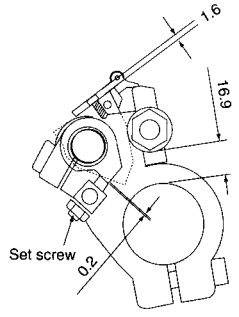

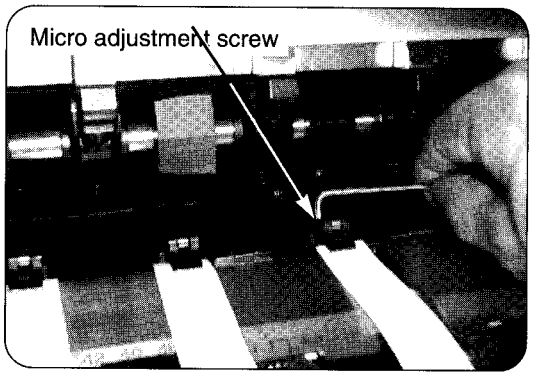

* Adjust the swing double gripper finger to apply uniform finger pressure to sheet.

Method of adjustment

(1) As shown in the figure, tighten the set screw to adjust the spring until 1.6 mm gap is obtained from the top side of the finger holder.

(2) Lightly contact the gripper tip to the anvil, and fix the cap screw of the holder.

(3) Insert a 0.2 mmthickness gauge between the stopper and the stopper bracket.

(4) Pinch a 0.04 thick paper strip between the finger and anvil, and adjust the finger pressure with the set screw to an extent that the paper strip is pulled out with light resistance.

NOTE: Adjust all finger until uniform pressure is obtained. Finger pressure should be adjusted by tightening cap screw that secures the finger holder.

[2] Adjustment of spring tension for swing gripper

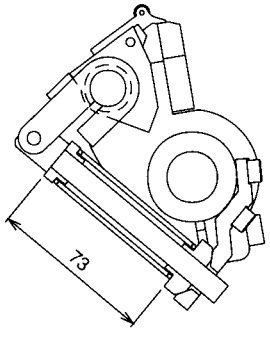

* Adjust the spring strength so that the cam follower of the gripper opening lever always rotates along the cam smoothly.

Method of adjustment

* As shown in the figure, loosen the cap screw of the lever while allowing the fingers to barely touch against the anvill. Set the gap to 73 mm as the reference.

NOTE: In this adjustment, adjust the spring tension at the condition while a 0.2mm thickness gauge inserted between the stoper and stopper bracket.

[3] Adjustment of gripper opening lever

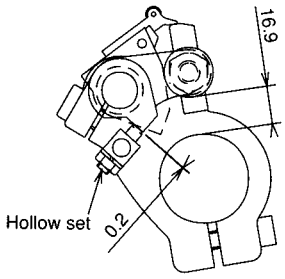

* Adjust the pressure of double grippers, and adjust the angle of gripper opening lever using the Lever positioning gauge (16.9 mm) for the gripper opening.

Method of adjustment

As shown in the figure, set the positioning gauge between the swing shaft and the cam follower, lightly push the cam follower against the gauge, and fix the gripper opening lever.

NOTE: In this adjustment, adjust and fix the gripper opening lever at the condition while 0.2 mm thickness gauge is inserted between the stopper and the stopper bracket.

[4] Adjustment of swing gripper opening

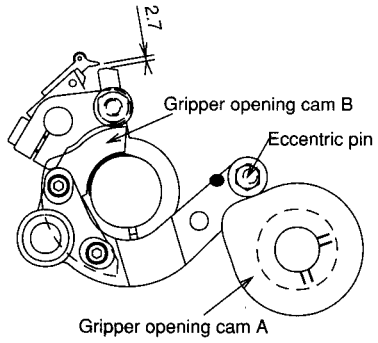

* Adjust the gripper opening to ensure that the swing grips sheet smoothly.

Method of adjustment

As shown in the figure, when the bearing comes to the highest position of the gripper opening cam, turn the eccentric pin to adjust the gripper opening to 2.7 mm.

[5] Adjustment of swing gripper closing

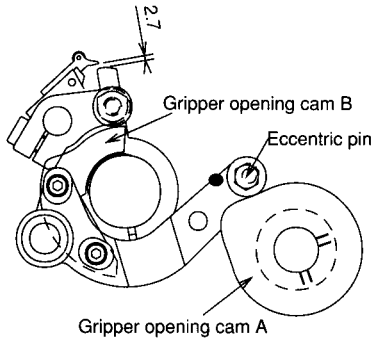

* Adjust the gripper so that it starts gripping a 0.04 mm thick paper strip at 347 degrees as the reference of swing gripper close.

Method of adjustment

(1) Operate the solenoid for holding the swing gripper by hand and insert a 0.04 mm thick paper strip between the finger and the anvil.

(2) As shown in the figure, loosen the set screw of cam, turn the cam (A) and adjust the gripper finger to close at 347 degrees that the paper strip is pulled out with slight resistence.

[6] Adjustment of simultaneous gripping of swing gripper

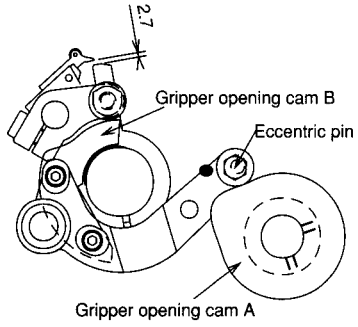

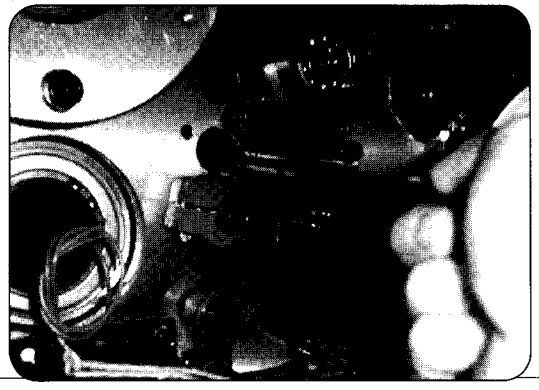

(Swing/No.1 transfer cylinder)

* Verify that the point of reference of machine is 45 degrees, and adjust the gripper finger opening timing (simultaneous gripping) by adjusting the cam (B).

Adjustment of reference

As shown in the figure, set the adjustment jig for adjustment of swing gripper opening timing between the cam and the swing shaft, loosen the set screw and slide the cam and adjust to open the gripper fingers at 45.25 degrees.

[7] Adjustment of scale plate height

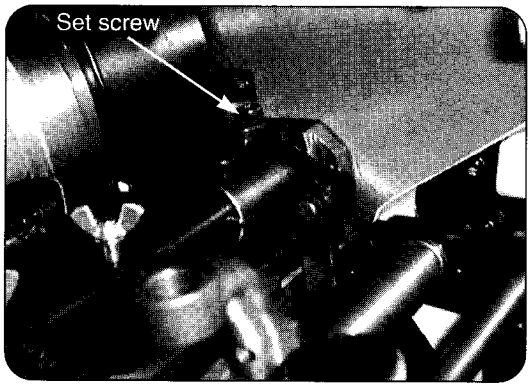

* In order for the swing gripper to grip sheets smoothly, adjust the scale plate to the same height as the swing gripper anvil.

Method of adjustment

(1) Rotate the machine to 347 degrees by hand.

(2) As shown in the figure, loosen the set screw of the bracket for securing the scale plate on both ends of the paper guide shaft, move the scale plate and adjust the scale plate and the swing gripper anvil.

[8] Adjustment of swing gripper holding stopper

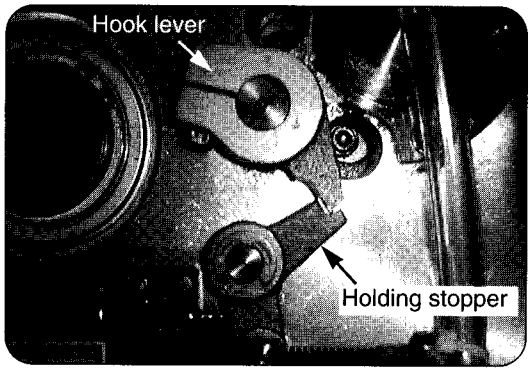

* Adjust the stopper for positive hooking when the solenoid is OFF.

Method of adjustment

As shown in the figure, loosen the set screw of the hook lever and adjust the position of the hook lever to provide a gap of 0.5 mm between the hook lever and the stopper when the eccentric pin of the swing gripper opening lever comes to the highest position of the cam (A).

NOTE: Verify that the stopper is completely released when the solenoid is ON.

[9] Adjustment of reference position and parallelism of front lay

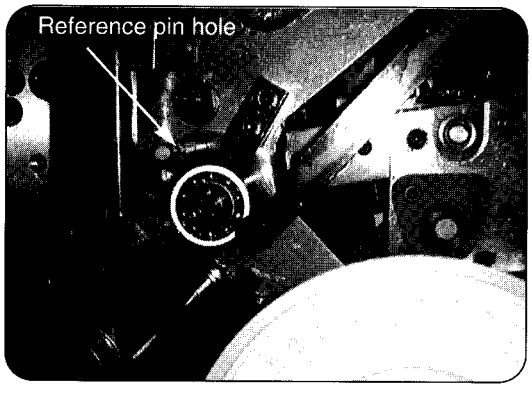

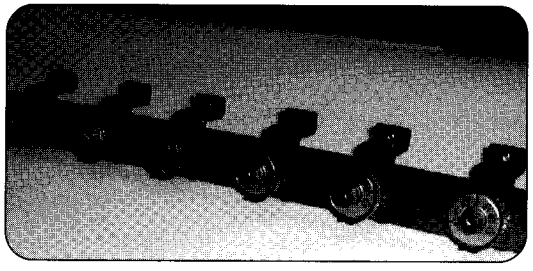

* Adjust the reference position and parallel of the front lay.

Method of adjustment

(1) Set each of six front lays to the position "0".

(2) As shown in the figure, set the reference hole of the front lay shaft flange to the reference pin hole of the frame by turning the cocking dial. (This position is "Dial 0 position" of the front lay cocking adjustment)

(3) Check the sheet gripping amount of 4.0 mm of the swing gripper.

NOTE : Confirm (3) of the above, feed a sheet of paper to No.1 transfer cylinder and verify the sheet gripper margin 4.5 mm of the cylinder gripper.

[10] Adjustment of front lay start timing

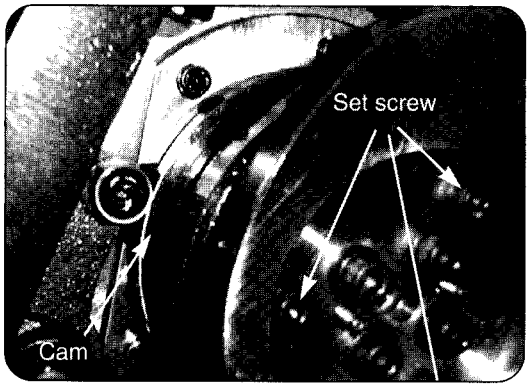

* Adjust the timing so that the front lay starts lowering when the protractor indicates 348 degrees.

Method of adjustment

(1) Operate the front lay holding solenoid by hand.

(2) As shown in the figure, set the pick tester to the front lay and confirm the start timing.

(3) Loosen the front lay cam fixing set screw on the swing cam side, and turn the cam for adjustment.

NOTE: Pick tester must be used for measuring and confirming the front lay start timing.

[11] Adjustment of front lay holding stopper

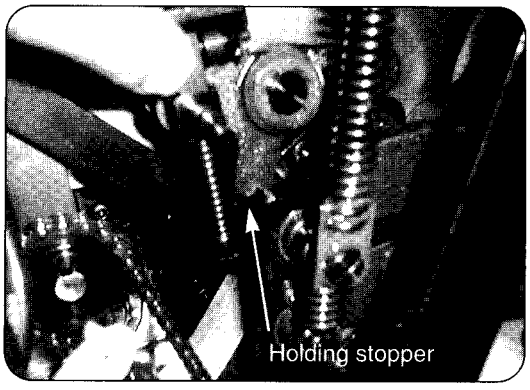

* Verify the stopper for positive releasing when the solenoid is ON.

Method of adjustment

Loosen the set screw of the soleniod and adjust the solenoid position so that the stopper is completely released when the solenoid is ON.

[12] Timing adjustment of side lay unit

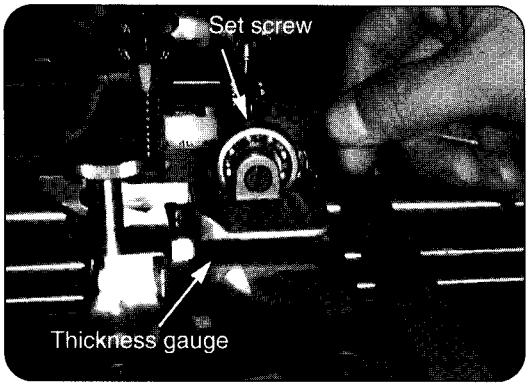

* As shown in the figure, adjust the side lay timing as follows to obtain stable side-registering accurancy from low to high speed.

(1) Height adjustment of side lay plate

As shown in the figure, adjust the gap between the side lay plate and the plate to 0.3 mm as the standard.

Method of adjustment

Turn the eccentric pin for adjustment.

Clockwise turn decreases the gap.

NOTE 1: The eccentric pin must not be adjusted 180 degrees, i.e. the opposite position.

NOTE 2: When the paper thickness is more than 0.2 mm, adjust the gap to the total of a paper thickness plus 0.15 mm.

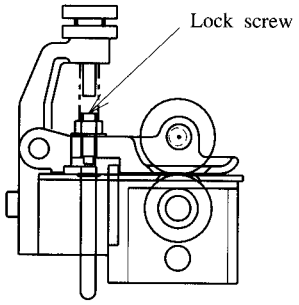

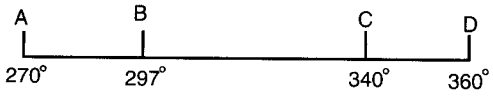

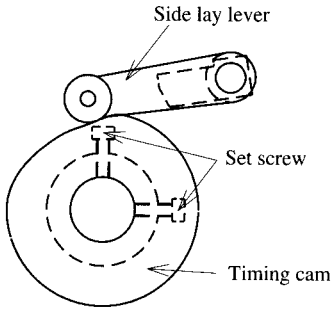

(2) Adjustment of side lay timing

As shown in the figure, adjust the side lay timing so that side lay bearing releases the sheet when the protractor indicates 317 degrees after the degrees between B and C is adjusted.

Method of adjustment

(1) As shown in the figure, loosen the lock nut, turn the set screw and adjust the B-C interval to 30 degrees.

(2) As shown in the figure, loosen the set screw of the side lay timing cam and turn the cam for adjustment.

A: When sheet reaches the front lay (265 degrees)

B: When the side lay bearing starts pulling sheet (317 degrees)

C: When the side lay bearing released the sheet (347 degrees)

NOTE: Use a 0.04 mm thick paper strip to check starting point of pulling and releasing with light resistance.

[13] Adjustment of paper guide timing

* When the protractor indicates 265 degrees, adjust the paper guide to the lowest position.

Method of adjustment

As shown in the figure, loosen the set screwof the cam, and turn the cam for adjustment.

Adjustment of delivery unit

8. Adjustment of delivery unit

[1] Tension adjustment of delivery chain

Adjust the delivery chain tension to ensure stable driving and smooth sheet receiving and transfer of the impression cylinder.

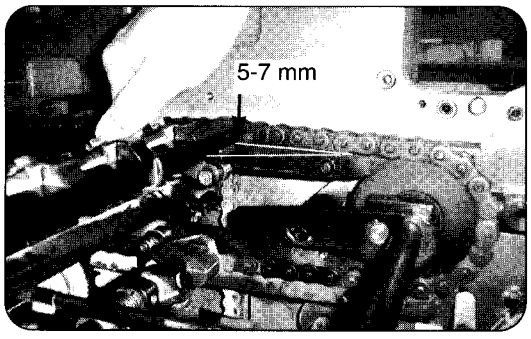

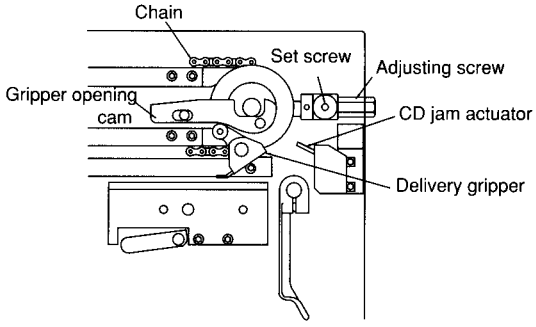

* As shown in the figure, turn the machine by handle and set the CD gripper at a 140 mm position from the center of chain wheel. Adjust the chain tension until the chain is lifted 5-7 mm with a hand.

Method of adjustment

Loosen the set screw, turn the adjustment screw for adjustment.

NOTE: Make sure to lubricate the chain joints of gripper after this adjustment.

[2] Adjustment of delivery gripper finger pressure

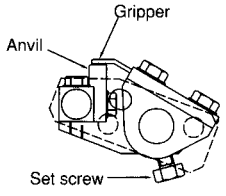

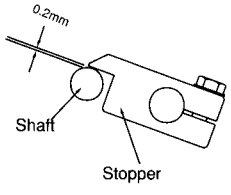

Set the opening and closing timing of all CD grippers to the same timing.

* As shown in the figure, insert a 0.2 mm thickness gauge between the stopper bracket and the gripper shaft and adjust to equalize the pressure of gripper fingers.

Method of adjustment

Pinch a paper strip (0.04 mm thick) between the finger and the anvil, and adjust the set screw of the finger bracket so that the paper strip can be pulled out slighty.

NOTE: After the adjustment, verify that the clearance 0.2 mm is not changed.

[3] Adjustment of delivery gripper opening lever

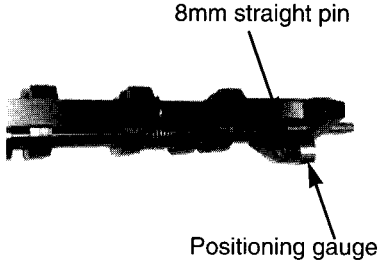

Set the opening timing of all CD grippers to the same timing.

* As shown in the figure, Remove the cam follower of the gripper opening lever and insert a lever posioning gauge (jig). Then, insert an 8 mm straight pin in the reference hole of the gripper bracket on the NOP-S and fix the gripper opening lever with the gauge being touched against the straight pin.

[4] Adjustment of positions of CD gripper and impression cylinder

Determine the relation of positions for correct receiving and transfer of sheets.

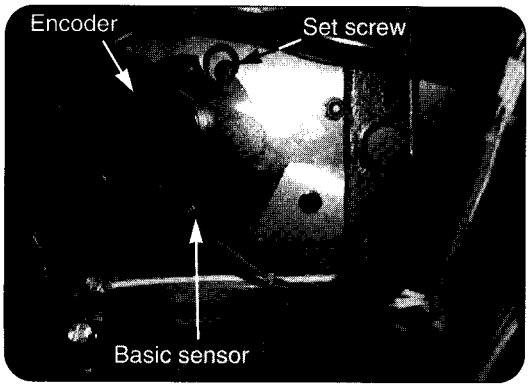

* As shown in the figure, loosen the 3 set screws which are tightened to the CD drive gear with the hub, turn the CD drive shaft for changing its phase with the impression cylinder .

Method of adjustment

Turn the CD drive shaft to adjust the gripper margin of the CD gripper finger to 4.0 mm to 4.2 mm.

NOTE: Before adjustment, set the front lay cocking adjustment knob to the position "0".

[5] Adjustment of gripping timing of CD gripper finger

Determine the timing to close the gripper finger for receiving and transfer of sheets.

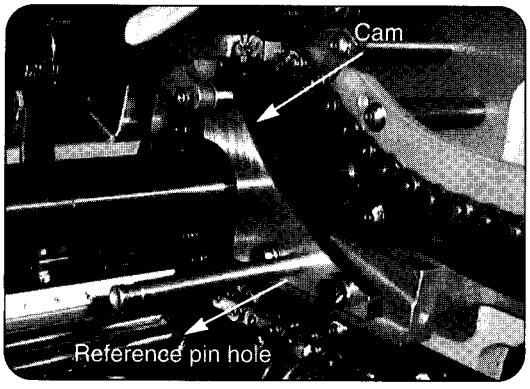

* As shown in the figure, move the cam back and forth to adjust the timing with reference to the reference hole for installation.

Method of adjustment

* Loosen the set screw, move the cam back and forth and adjust the timing to 55.75 degrees to allow the CD gripper to close at that timing.
* After the adjustment, verify that the timing is 0.5-0.75 degree for simultaneous gripping of the impression cylinder gripper and the CD gripper.

NOTE: Use a 0.04 mm thick paper strip for adjustment.

[6] Adjustment of timing for jogging delivery guide

Determine the timing for jogging the printed sheets.

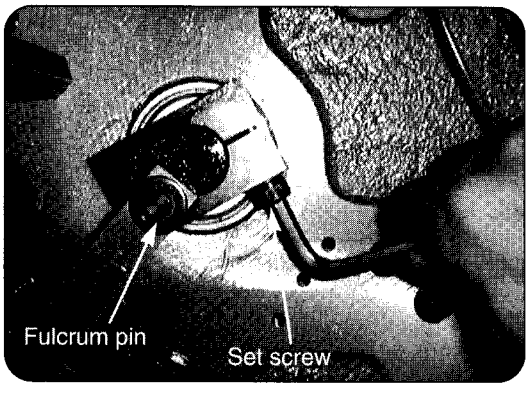

* As shown in the figure, adjust the position of the fulcrum pin bracket of the crank rod.

Method of adjustment

When two CD grippers of both upper and lower chains are overlapped, loosen the set screw of the fulcrum pin bracket, and tighten the set screw of the fulcrum pin bracket being set the fulcrum pin of the crank rod to a position of 7 o'clock.

Reference

The position where two CD grippers of both upper and lower chains are overlapped at 128 degrees on the timing.

[7] Adjustment of delivery board automatic lowering mechanism

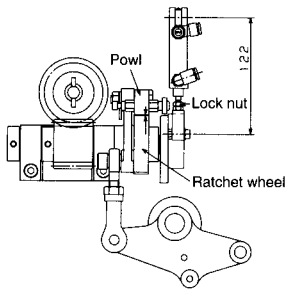

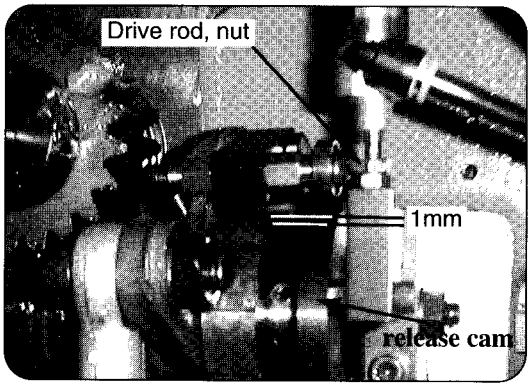

* As shown in the figure, set the dimension between the air cylinder mounting stud pin and the connecting pin to 122mm.

Method of adjustment

* Loosen the lock nut, turn the drive rod and change the rod end length.
* After setting the length, loosen the lock nut of the adjustment screw of the air cylinder rod, and turn the piston rod or the block to adjust the clearance between the pawl and the ratchet wheel to 1 mm.

NOTE: After the adjustment, verify that the gripper releasing cam does not contact the cam roll pin.

[8] Adjustment of rocking end guide lever

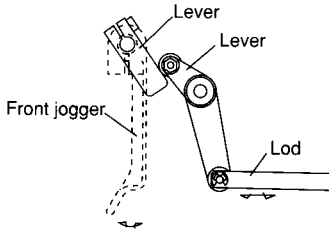

*As shown in the figure, adjust the position of the rocking lever which operates the end jogger shaft with the end guides.

Method of adjustment

When the protractor indicates 350 degrees, contact the rocking lever to the bearing of the drive lever, and tighten the set screw of the rocking lever.

[9] Adjustment of sensitivity and position of delivered paper height detection sensor

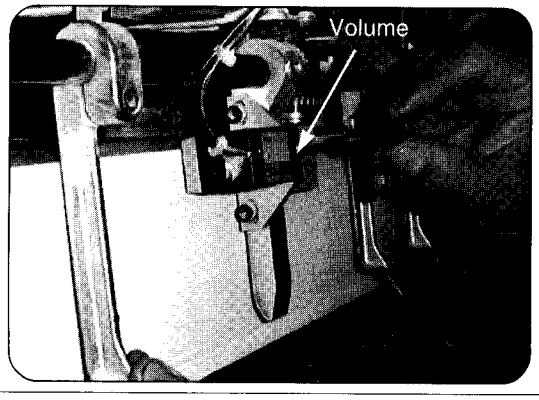

Method of adjustment

As shown in the figure, adjust the knob so that the sensor LED comes off when the end guide is lifted 7-8 mm from the surface of the sheet end.

NOTE: Verify that the sensor body is provided with a ground wire.

Adjustment of ink unit

9. Adjustment of ink unit

[1] Ink roller drive timing

*** Adjust the swing timing of the following rollers in relation to the plate cylinder position.**

(1) Timing for oscillating the oscillation roller (switch back point)

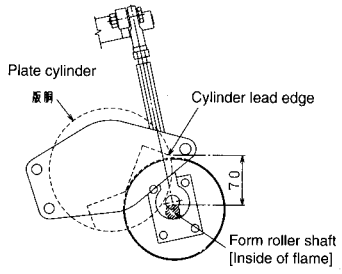

* A shown in the figure, the position of fulcrum pin of the drive rod points 11 o'clock when the gap between the plate cylinder leading edge and the outer surface of ink form roller mounting drive shaft is 70 mm.

Method of adjustment

Remove the stud bracket of the drive rod and the drive rod drive unit and change a gear mesh of the drive gear for adjustment.

NOTE: For changing the timing, removal of the drive rod and the drive gear is necessary.

(2) Adjustment of symmetrical oscillating of oscillation roller

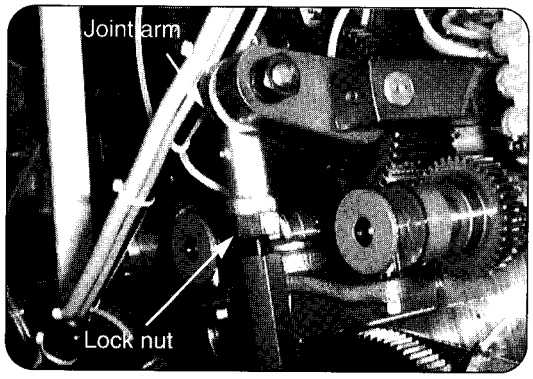

* As shown in the figure, adjust the symmetrical oscillating of the oscillation roller against the form roller and distributor roller.

Method of adjustment

Remove the fulcrum pin, loosen the lock nut, and change the length of the drive rod for symmetrical adjustment. After the adjustment, verify that the oscillating of the oscillation roller is symmetric evenly to right and left sides.

NOTE: Install the roller so that the grease nipple of the joint arm faces outside.

(3) Ductor roller swing timing

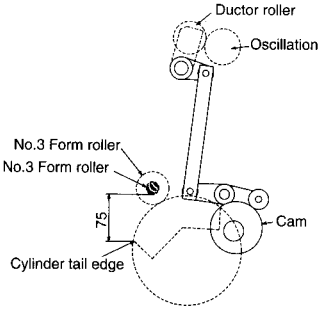

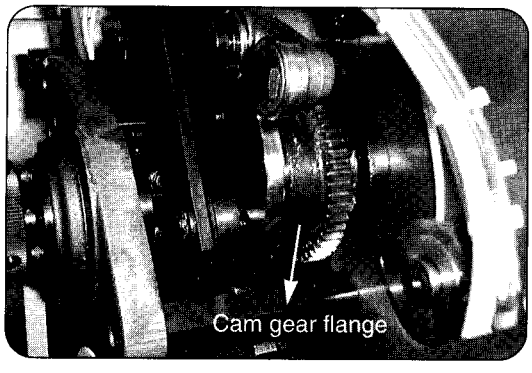

* As shown in the figure, adjust the cam gear position so that the ductor roller comes in contact with the oscillation roller when the gap between the outer surface of the ink No.3 form roller shaft and the plate cylinder leading edge is 75 mm.

Method of adjustment

Remove the drive link and the stud of the fountain roller and remove the cam gear set screw. Change a gear mesh of the cam gear flange for adjustment.

NOTE: For changing the timing, removal of the cam gear is necessary.

[2] Adjustment of ductor roller pressure

(1) Adjustment of contact pressure with oscillation roller

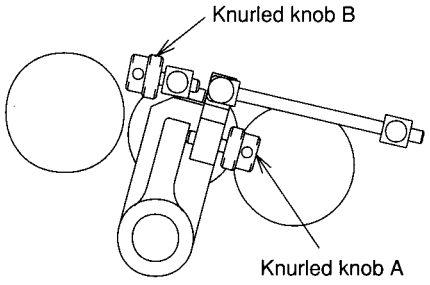

* As shown in the figure, turn the knob A to adjust the nip width between rollers to 4 mm.

Method of adjustment

Clockwise turn of the knob (A) increases the pressure. Counterclockwise turn of the knob (A) decreases the pressure.

(2) Adjustment of contact pressure with fountain roller

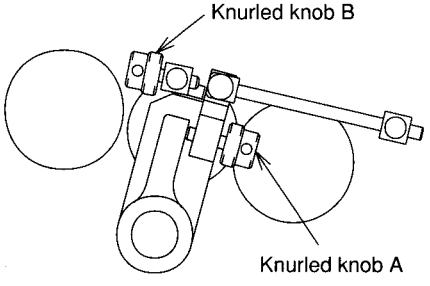

* As shown in the figure, turn the knob B to adjust the nip width between rollers to 4 to 4.5 mm.

Method of adjustment

Clockwise turn of the knob (B) decreases the pressure. Counterclockwise turn of the knob (B) increases the pressure.

Verify that the nip width between rollers is 4 to 4.5 mm.

NOTE: Before inspecting the nip width, set the ink feed dial to "0".

[3] Adjustment of ductor roller holding stopper

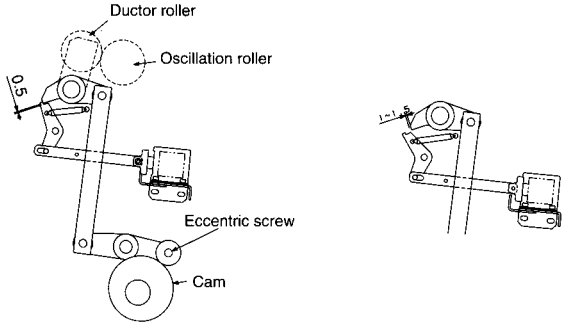

* As shown in the figure, adjust the gap shown in the Figure A to 0.5 mm with the ductor roller being in contact with the oscillation roller (the highest position of the ductor actuation cam).

Method of adjustment

For adjustment, turn the eccentric screw bolt of the bearing shown in the figure.

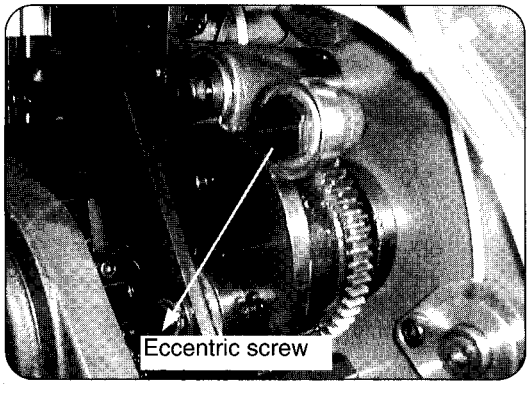

* When the solenoid is ON, adjust the gap to 1 mm to 1.5 mm as shown in the figure.
* When the solenoid is OFF, adjust the gap to 0 mm as shown in the figure.

Method of adjustment

Adjust each position of the solenoid bracket and the stopper of solenoid plunger.

[4] Adjustment of form roller ON/OFF air cylinder rod

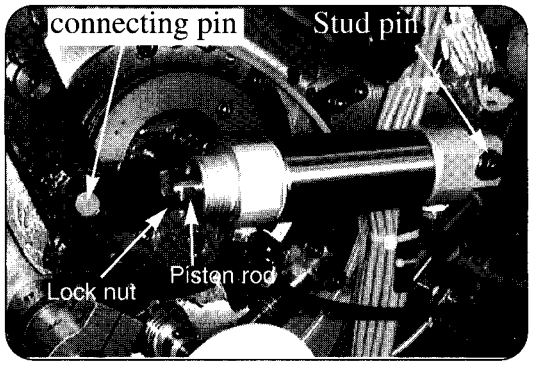

* As shown in the figure, set the demension of the gap between the air cylinder mounting stud pin and the connecting pin shown in the Figure A as follows:

1P / 3P	225mm
2P / 4P	227mm

Method of adjustment

Loosen the lock nut and turn the piston rod.

NOTE: Adjust the gap when the piston rod is retracted, a position where the air cylinder is OFF.

[5] Adjustment of form roller ON/OFF cam position

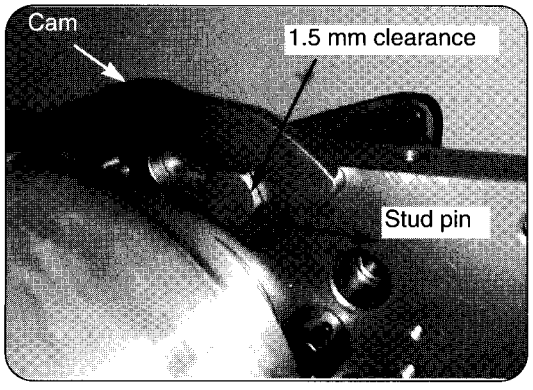

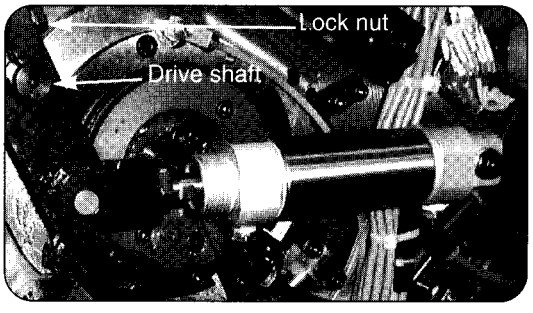

* As shown in the figure, adjust the cam to a position where the cam mounting stud pin does not contact the inner surface of the cam slot when the air cylinder is either ON or OFF. (Gap: 1.5 to 2.0 mm)

Method of adjustment

Loosen the lock nut of the lever, set the plate clamping wrench in the hole of the drive shaft for driving cam, and turn the drive shaft for cam position adjustment when the air cylinder is OFF.

NOTE: Verify that excessive noise is not generated during ON/OFF operation of the air cylinder.

CATION: To secure the safety, take utmost care when operating the air cylinder.

[6] Adjustment of oscillating for No.1 form oscillation roller

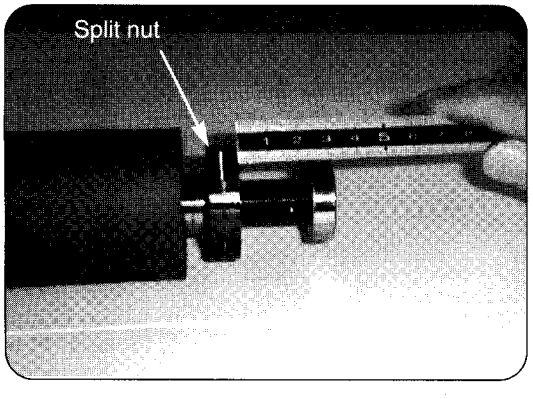

* Adjust the reference oscillation amount to 4 mm.

Method of adjustment

As shown in the figure, loosen and turn the set screw of the split nut, and adjust the gap between the split nut side surface and the bearing side surface to 31 mm.

NOTE: Adjust oscillating amount for both the OP-S side and NOP-S side.

* Adjustable range is 0 to 8 mm.

[7] Adjustment of fountain roller brake

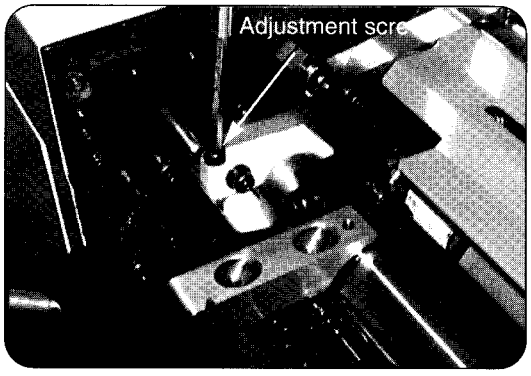

Adjust the brake to prevent its rotation of the fountain roller from a contact of the ductor roller rotation.

Method of adjustment

As shown in the figure, loosen the nut and turn the adjustment screw for adjustment.

NOTE: Verify that the manual handle operation is not heavy.

[8] Inspection and adjustment of roller pressure

*** Adjust the pressure correctly to obtain the best printing effect.**

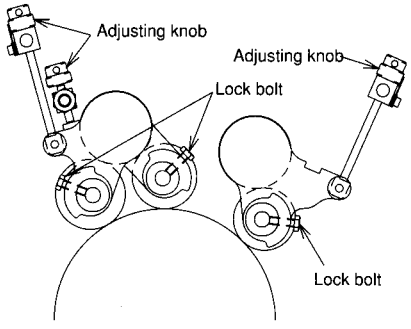

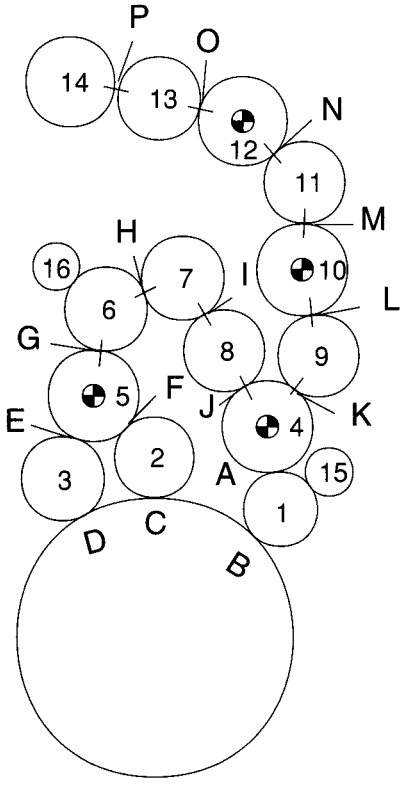

Method of adjustment

(1) Adjustment of pressure between form roller and oscillation roller.

Loosen the set screw of the roller holder, turn the roller holder and adjust the nip width on the roller to 3.0 mm. Pressure increases when the roller holder is turned to greater numbers on the scale.

NOTE: Adjust the nip width of No.1 oscillating form roller to 4.0 mm.

(2) Adjustment of pressure between form roller and plate surface

Turn the knob to adjust the nip width on the plate surface to 3.0mm.

Clockwise turn of the knob decreases the pressure.

Counterclockwise turn of the knob increases the pressure.

NOTE: Confirm the plate total packing 0.4 mm before adjustment.

Measure and adjust the nip width with suitable amount of ink.

	Nip width		Nip width
A	4mm	I	3mm
B	3mm	J	3mm
C	3mm	K	4mm
D	3mm	L	4mm
E	3mm	M	4mm
F	3mm	N	4mm
G	4mm	O	4mm
H	3mm	P	4.5mm

[9] Adjustment of cleaner attachment

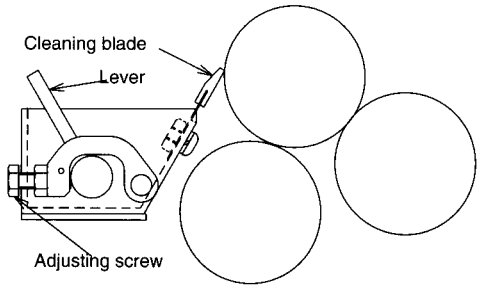

* Adjust to wash up the ink evenly from right to left sides of the roller with suitable pressure.

Method of adjustment

Use the adjustment screw of the hook lever for adjustment.

Clockwise turn of the lever increases the pressure.

Counterclockwise turn of the lever decreases the pressure.

NOTE: Adjust and check the parallel of the blade which is installed on the cleaner attachment body in advance.

[10] Adjustment of ink feed handle brake

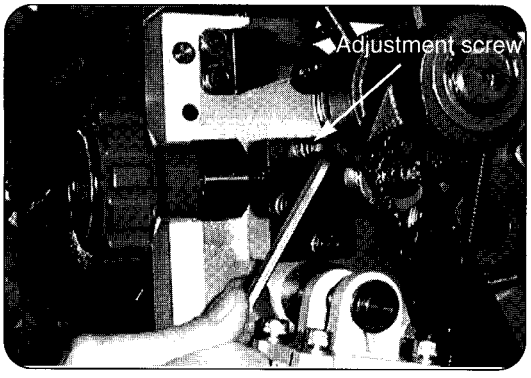

*Adjust the brake to prevent the it rotation of the fountain roller from vibration by a contact of the the one way clutch lever.

Method of adjustment

As shown in the figure, turn the adjustment screw of the shaft holder.

NOTE: Verify that the ink key handle operation is not too heavy.

[11] Zero point adjustment of ink key blade

(Ink key controller)

* Adjust to provide a minimum ink thickness of the ink on the fountain roller and uniform ink thickness all over the blades.

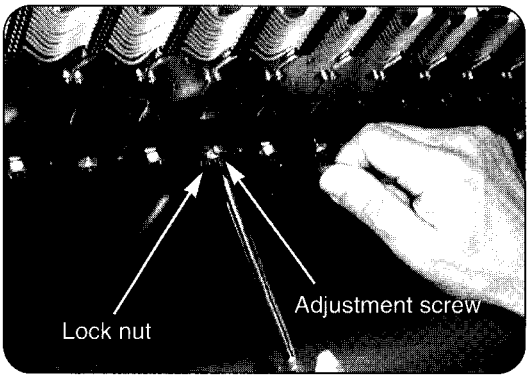

Method of adjustment

While turning the roller little by little with the manual handle, loosen the lock nut and turn the adjustment screw slowly to adjust the ink density (thickness) on the fountain roller.

(approx. 0.003-0.004 mm on coating thickness meter)

NOTE: Before the adjustment, verify that the ink fountain is locked at the reference position of the lock nut.

Adjustment of dampening unit

9. Adjustment of dampening unit

[1] Adjustment of form roller/metering roller ON/OFF air cylinder

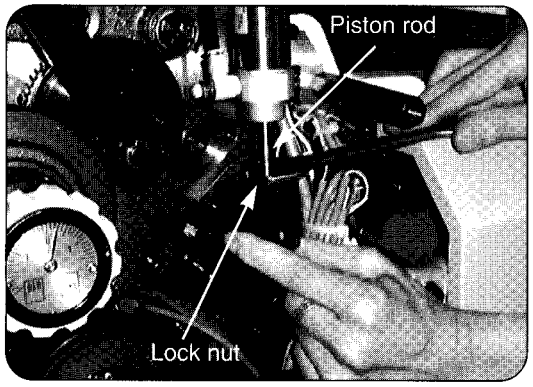

(1) Adjustment of piston rod

As shown in the figure, set the dimension between the air cylinder mounting stud pin and the connecting pin shown in the figure as follows:

1P - 4P	196mm

Method of adjustment

Loosen the lock nut and turn the piston rod for adjustment.

NOTE: Adjust the dimension when the piston rod is retracted, a position where the air cylinder is OFF.

(2) Adjustment of speed controller (bottom side)

Fully tighten the adjustment knob and loosen 1/2-1 turns.

(3)Adjustment of speed controller (upper side)

Fully tighten the adjustment knob and loosen 2 turns.

NOTE: Adjust the four units of air cylinders to the same operating time and check the result.

WARNING: To secure the safety, take utmost care when operating the air cylinder.

[2] Adjustment of form roller/metering roller ON/OFF cam position

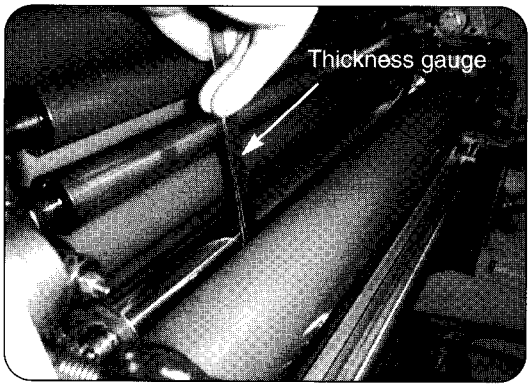

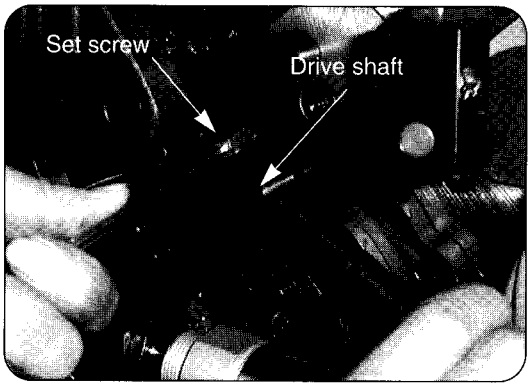

* As shown in the figure, set the gap between the metering roller and the oscillation roller to 2 mm when the metering roller contacts the fountain roller.

Method of adjustment

When the air cylinder is OFF, loosen the set screw of the connecting link, set the plate clamp wrench into the hole of the drive shaft for driving cam, and turn the drive shaft for the adjustment.

WARNING: To secure the safety, take utmost care when operating the air cylinder.

[3] Adjustment of setting of bridge roller

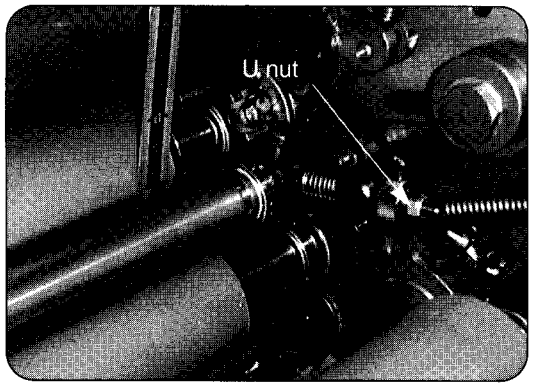

* As shown in the figure, set a 0.3-0.5 mm gap between the bridge roller and the ink form roller at a position where the knob is raised when the water/ink form roller is OFF.

Method of adjustment

Turn the U nut for adjustment.

NOTE 1: Verify that the bridge roller contacts to No.1 ink form roller at a position where the knob is returned.

NOTE 2: The above adjustment method is a method used for pressure adjustment in the cleaning mode.

[4] Inspection and adjustment of roller pressure

* Adjust the roller for correct pressure to obtain the best printing effect.

Roller arrangement layout

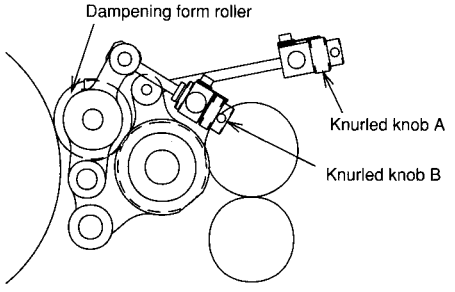

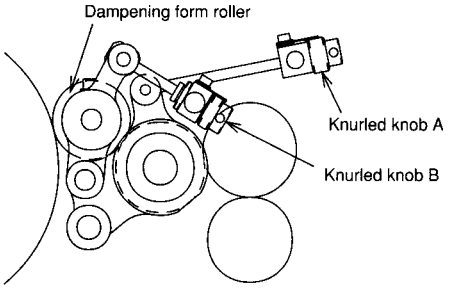

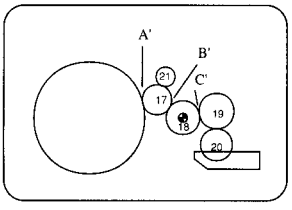

Nip width		Nip width	
A'	4mm	C'	3-2.5mm
B'	4mm	D'	3.5-4.0mm

Operation

Raise the night latch lever of the metering roller, run the machine, and set the manual ink form roller button to ON position to supply ink to the plate surface. Then, set the manual dampening form roller button to ON position and apply ink to the form roller/oscillation roller.

Method of adjustment

(1) Pessure adjustment between form roller and oscillation roller

Turn the knob (B) to adjust the nip width on the roller to 4.0 mm.

Clockwise turn of the knob increases the pressure.

Counterclockwise turn of the knob decreases the pressure.

(2) Pressure adjustment between form roller and plate surface

Turn the knob (A) and adjust the nip width on the plate surface to 4.0 mm.

Clockwise turn of the knob decreases the pressure.

Counterclockwise turn of the knob increases the pressure.

NOTE 1: Make sure to shift the night latch lever for locking the metering roller fully to upward.

NOTE 2: In the adjustment, It is necessary to readjust and recheck the pressure of the form roller and oscillation roller.

(3) Pressure adjustment between metering roller and oscillation roller

Lower the night latch lever, contact the metering roller with the oscillation roller by manual dampening form roller button, and measure the nip width on the oscillation roller.

Turn the knob (E) to adjust the nip width to 3-2.5 mm.

Clockwise turn of the knob decreases the pressure.

Counterclockwise of the knob increases the pressure.

[5] Adjustment of pressure between metering roller and fountain roller

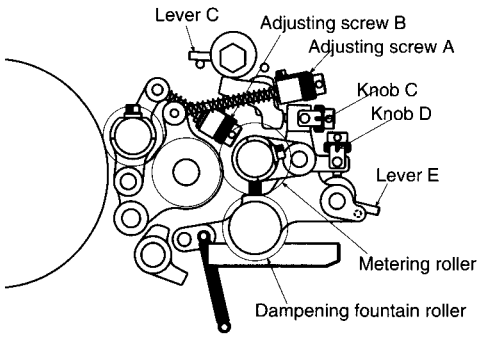

* Before making this adjustment, remove the ink on the roller, and verify that cooled dampening solution is contained in the water fountain.

Operation

Press the manual water feeding buttonband set the roller speed to low speed rotation by the speed volume. Under this condition, turn the knob (D) 3 to 4 pitches at right and left equally, and adfjust until the water film is not visually seen on the metring roller surface.

Clockwise turn of the knob increases the pressure. Counterclockwise turn of the knob decreases the pressure.

NOTE: After the adjustment, re-inspect and re-adjust the pressure of the metering roller and the oscillation roller.

[6] Adjustment of water detection device

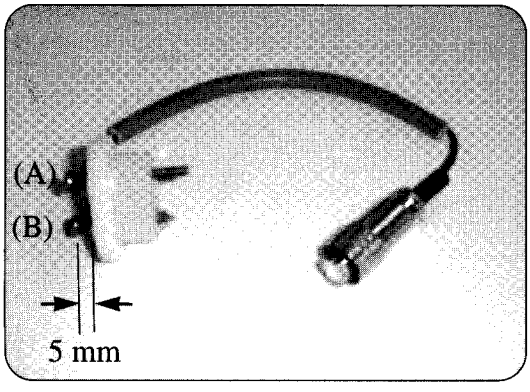

* When there is no water and low water level in the water fountain, the fountain roller/metering roller stops rotating.

Method of adjustment

As shown in the figure, adjust the distance between the head thread of detection screws (A), (B) and top surface of the socket to 5mm as shown in the figure.

Adjustment of blanket washing unit

11. Adjustment of blanket cleaner

Adjust the blanket cleaning unit to ensure uniform cleaning and drying of the blanket.

[1]Parallel pressure adjustment between blanket cleaning roller and squeezing roller

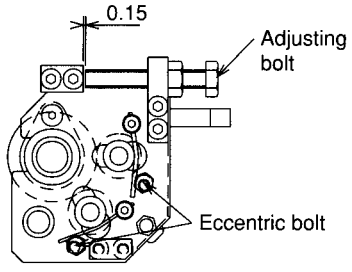

* Adjust these rollers to supply uniform thin film of the washing solution over the blanket.
* Apply a quality paper strip (0.1 mm thick, 30 mm width) in the OP-S, NOP-S and middle (3 locations) of the rollers, and adjust the pressure.

Method of adjustment

As shown in the figure, loosen the nut of the eccentric bolt, turn the eccentric screw to adjust the paper strip pressure evenly in the OP-S, NOP-S and middle to an extent the paper strip does not break and is difficult to be pulled out.

NOTE: For adjustment and checking of the pressure, adjust rollers with a correct top-to-down position of the cleaner unit.

[2]Parallel pressure adjustment between blanket cleaning roller and mesh roller

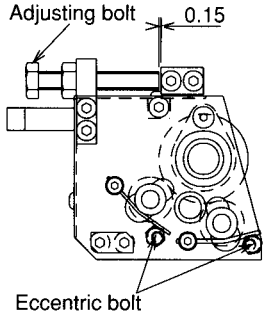

* Apply a quality paper strip (0.1 mm thick, 30 mm wide) in the middle and OP-S, NOP-S (3 locations) of the rollers, and adjust the pressure.

Method of adjustment

As shown in the figure, loosen the nut of the eccentric bolt, turn the eccentric screw to adjust the paper strip pressure evenly in the OP-S, NOP-S and middle to an extent the paper strip does not break and is difficult to be pulled out.

NOTE: For adjustment and checking of the pressure, adjust rollers with a correct top-to-down position of the cleaner unit.

[3] Parallel pressure adjustment between blanket cleaning roller and blanket

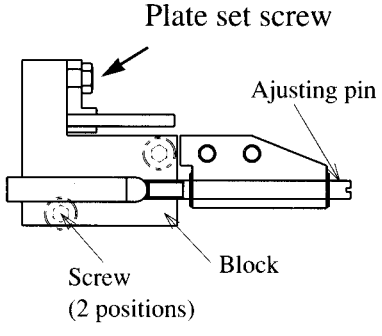

* Apply a quality paper strip (0.1 mm thick, 30 mm wide) on both ends of the cleaning roller and the blanket cylinder, lightly push the middle of the cleaner unit, pull with light touching pressure and adjust the resistance.

Method of adjustment

As shown in the figure, loosen the two set screws of the bracket, turn the adjustment screw to adjust the very light resistance pressure evenly in OP-S and NOP-S. Clockwise turn of the screw decreases the pressure. Counterclockwise turn of the screw increases the pressure.

NOTE 1: Prior to the adjustment, set the printing pressure dial to 0.1.

NOTE 2: Verify that the plate setting screw is not loosened.

* Position of adjustment screw: 1P/3P for OP-S, 2P/4P for NOP-S

[4] Overall pressure adjustment between blanket cleaning roller and blanket cylinder

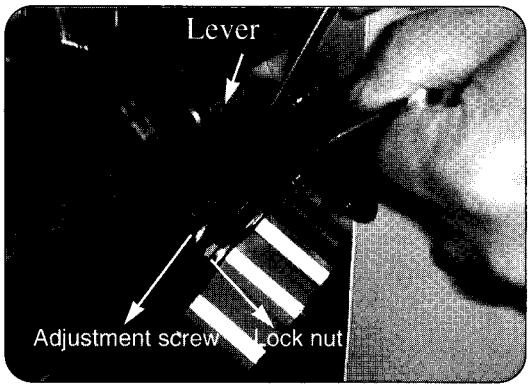

* Apply a quality paper strip between the cleaning roller and the blanket cylinder, and adjust the tensile resistance pressure.

*After conforming the manual operation button is effective, press the blanket cleaning button.

Method of adjustment

As shown in the figure, loosen the lock nut of the adjustment screw provided at the tip of the air cylinder piston rod, turn the adjustment screw first, set the pressure to an extent the paper strip does not break and is difficult to be pulled out, and turn the adjustment screw to the left by one turn.

Clockwise turn of the screw decrease the pressure.

NOTE 1: Adjust the screw uniformly and little by little for the OP-S and the NOP-S.

NOTE 2: After the adjustment, verify that the lever has play against block. (Both OP-S,NOP-S)

[5] Adjustment of stopper

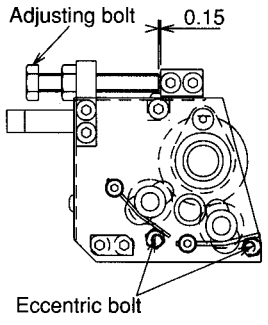

* Adjust the stopper to prevent falling into the cylinder gwp and prevent excessive vibration when changing the setting of printing pressure.

* Set the blanket cleaning button to ON positon to contact the cleaner unit toward the blanket, and adjust the stopper screw to be 0.15mm between the stopper and the block.

Method of adjustment

Verify that the paper thichness adjustment dial set to "0.1"

As shown in the figure, loosen the lock nut, turn the stopper screw and adjust to an extent the thickness gauge (0.15 mm) can be pulled out with light force.

NOTE: Adjust the stopper at the center of the effective area of the blanket cylinder.

[6] Maintenance of cleaning solvent nozzle

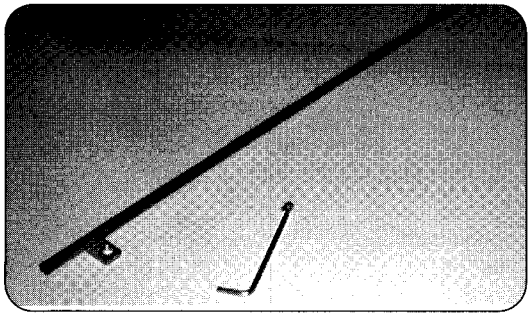

* Even spraying is necessary from the nozzle spray holes. Uneven spraying causes improper cleaning.

*After blanket cleaning, if any ink of the image is left on the blanket, check to see if the nozzle is clogged.

Method of adjustment

Remove the set screw in the tip of the nozzle, and wash or clean the nozzle using a sharp tool such as a needle.

*

IKC service manual (ink key controller)

IKS Service Manual Section

Table of Contents

[1] General description of the mechanism
[2] Disassembly and handling of each components
[3] Installation of ink key unit (summary)
[4] Zero point adjustment procedure
[5] Replacement of motor unit

[1] General description the mechanism

(1) This ink key controller is designed to adjust the split blade of the ink fountain by a motor according to the amount of the ink required.

(2) The model B452 is equipped with 14 ink keys (split blade) of 35 mm wide and with 15 mm wide auxiliary blades on right and left.

(3) Each split blade is driven by individually mounted motor units into vertical direction to increase or decrease the gap between the split blade (tip section) and the fountain roller, thereby to adjust the amount of the ink supply.

(5) Maximum gap between the split blade (tip section) and the fountain roller is approximately 0.5 mm.

(6) The time required to move from the zero point position to the maximum gap by a motor is approximately 25 seconds.

(7) The split blade position is detected by a hall element built into the motor unit and displayed on the operation stand.

(8) Zero point can be adjusted by the zero point adjustment screw.

(9) The gap of 0.003 to 0.004 mm at the zero point is appropriate between the ink key (split blade) tip section and the fountain roller.

[2] Disassembly and handling of each component

(1) Removing the cam cover

For usual zero point adjustment, remove the two cap screws (A) on both sides of the ink fountain, and bring down the cam cover. In doing so, verify that no parts such as screws do not fall off by eyes and ears. (Cam cover)

(2) Removing the motor cover

Remove the two cap screws (C) on both sides of the ink fountain and remove the two levers (D) for mounting ink fountain.

(3) To remove the split blade, press the temporary shut-off key switch of the operation panel to set the displayed number to "00." Shut off the power of the ink key controller, remove the connector of the motor unit, remove the two cap screws for mounting motor unit, and remove the motor unit.

Then, remove the cover plate covering the base section of the split blade. The split blade is fixed on both sides by the split block (F). Remove this block. Remove the cap screw of the spring set metal fitting from the casting main body (small window), and lift the split blade. The split blade comes out with the return spring (H). Reverse this procedure for assembling.

(4) The split blade is a precision part and is stamped with its number. Exercise utmost care when disassembling, and remember the order of the split blade and the order of the split blade mounting block.

(5) Use sufficient care to prevent damage to the split blade when washing it. NEVER use such tools as an iron brush, file, grinding stone. Wash the split blade on a periodic basis.

(6) Corners of the split blade are very shape. Take utmost care in handling. Especially, when the split blade is separated from the fountain roller for washing, fingers may possibly be pinched.

To prevent this, be sure to hold the main body with one hand.

Also utmost care is necessary to prevent injury to hands in particular when wiping off the washing solution or wiping the split blade tips to right and left directions for cleaning.

(7) After the split blade is cleaned, apply a thin coat of lubricant to the main body (ground surface) while preventing dust from attaching to the split blade.

[3] Installing the ink key unit (Summary)

(1) Verify that the rotating shaft goes into the boss section (K) of the ink fountain. (a gaps of 0.01 to 0.02 mm)

(2) Set the rotating shaft into the boss (OP-S) of the ink fountain frame, set the positioning collar (L) and the rotating spring (M), and set the rotating spring support collar (N). Then, set the rotating spring support collar (N) and the rotating spring (M) on NOP-S side, and set the rotating shaft into the frame boss (NOP-S).

(3) The rotating shaft is longer than the ink fountain. Closely contact the ink fountain boss to the inside of the frame on OP-S side, and set with the collar.

(4) Set the protrusion on one side of the rotating spring into the hole of the rotating spring support collar (N), rotate about 1/4 turns and fix with the set screw (right and left).

(5) Lift the ink fountain horizontally, check the screw hole at the center of the rotating shaft from outside of the frame, put the reamer screw (O) at right and left, and tighten the screw.

(6) Adjust the stopper screw to provide a gap of about 2 mm between the ink segment and the ink fountain frame. At the same time, confirm the distance between the blade tip and the fountain roller (the gap should be about 1 mm).

(7) Set the ink fountain main body on the fountain roller (allowable gap: 0.02 mm). Check the gap (0.01 mm) from the auxiliary blade. To adjust the gap, insert shims under the ink fountain or slightly adjust the stopper screw to obtain the gap.

(8) To prevent ink from leaking when the ink is filled to zero point adjustment, use the zero point adjustment screw to cause the split blade to contact lightly with the fountain roller, and **reverse by a half turn**.

[4] Zero point adjustment procedure

(1) The zero point adjustment is made to provide a minimum thickness of the ink on the fountain roller and uniform ink thickness all over the blade (approx. 0.003 to 0.004 mm).

(2) First, provide a distance of 0.5 mm or more between the split blade and the fountain roller using the zero point adjustment screw (Make this adjustment when re-installing the fountain).

(3) Press the temporary shut-off key switch of the operation stand to close all blades. Be sure to check for 00.

(4) Verify that the fountain unit is completely and properly set (line mark of lock nut). Loosen the lock nut (Q), turn the zero point adjustment screw (P) clockwise, and stop turning at a point before the split blade contacts the fountain roller.

(5) Fill ink and turn the fountain roller little by little or in small increments. Slowly turn clockwise the zero point adjustment screw (P), and the ink concentration (density) on the fountain roller becomes thinner gradually.

(6) Set the blade uniformly on right and left, then at center and center right and center left. Then, set the blade uniformly on right and left.

(7) Adjust the ink film thickness uniformly. Open all blades to 3.0 to 5.0 by operating the key on the operation panel, and verify that the ink film thickness is uniform on the fountain roller.

[Supplementary explanation]

Zero point adjustment is necessary for following cases.

(1) When the split blade is disassembled and re-installed due to improper operation.

(2) When the motor unit is failed.

(3) When the zero point is deviated.

[5] Replacement of motor unit

(1) Press the temporary closing button of the operation panel to close all blades.

(2) Remove the motor cover and the cam cover.

(3) Pull out the connector (plug socket) of the motor unit.
Remove the two cap screws which secures the motor unit while supporting the motor unit. this way, the motor unit can be removed easily.

(4) Before installing a new motor unit, set the zero position mark (white mark) of the rotating gear teeth to the center, and install the motor unit parallel.

(5) To connect the connector (plug socket) to the motor unit, be sure to insert it horizontally. To identify, check set the match marks (male and female) at two positions of the plug socket, and insert the connector.

(6) Be sure to dry your hands before inserting the connector into the motor unit. Pay attention not to allow oil, grease, chips and dust and other foreign matters from attaching to the plug socket.

(7) Make the zero point adjustment, and uniformly adjust the ink thickness on the fountain roller.

[Supplementary explanation]

(1) When replacing the motor unit with a new one, do not turn the gear of the motor unit. It is adjusted to the zero point by the maker.

(2) When replacing a failed motor unit, zero point adjustment of the blade after that of the failed motor unit may have to be made depending on conditions of the failure.

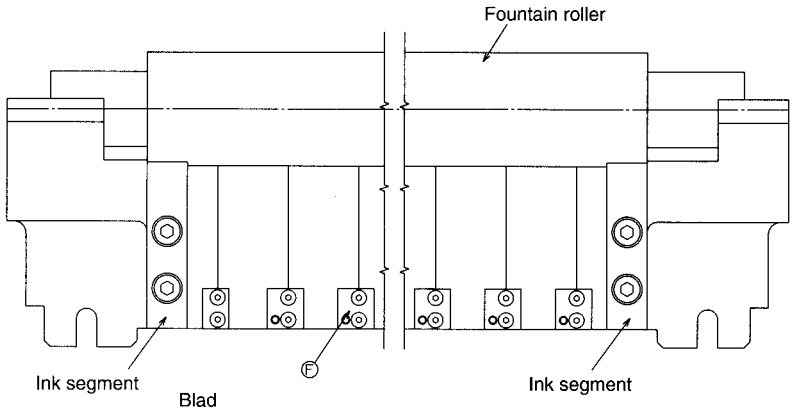
Fountain roller
Ink segment
Blad
Ⓕ
Ink segment

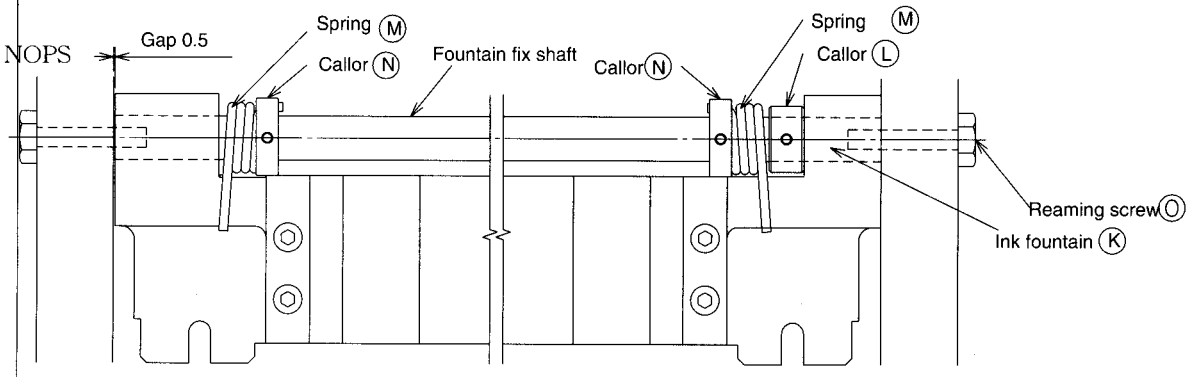
NOPS
Gap 0.5
Spring Ⓜ
Callor Ⓝ
Fountain fix shaft
Callor Ⓝ
Spring Ⓜ
Callor Ⓛ
Reaming screw Ⓞ
Ink fountain Ⓚ

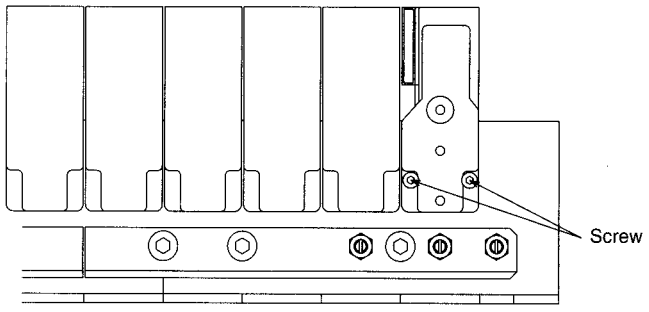
Screw

EPS service manual (B452A)

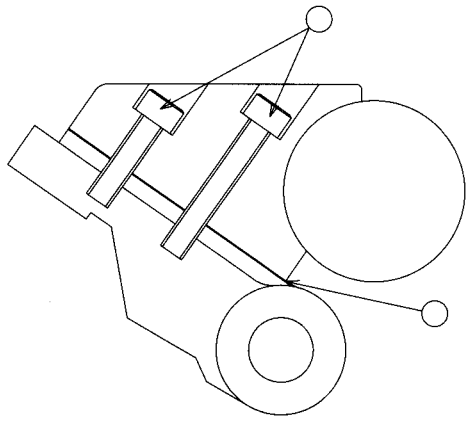

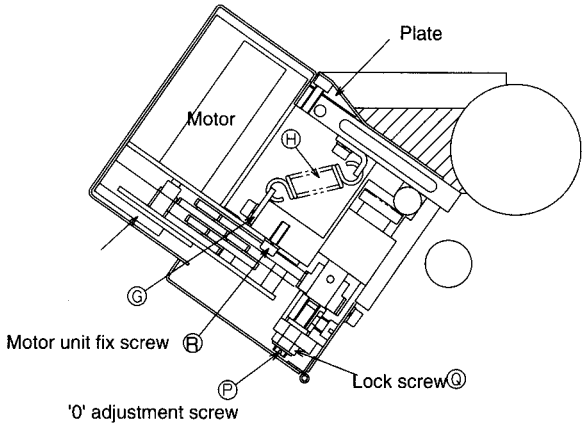
Plate
Motor
H
G
Motor unit fix screw R
P
'0' adjustment screw
Lock screw Q

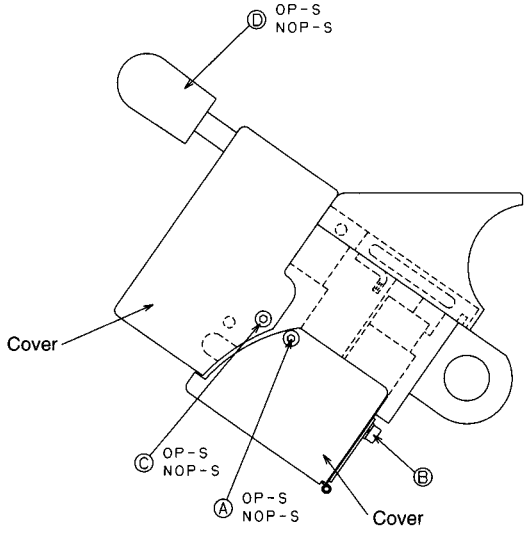
D OP-S NOP-S
Cover
O
P
C OP-S NOP-S
A OP-S NOP-S
B
Cover

EPS Service Manual Section (B452A)

Contents

[1] ADJUSTMENT OF PLATE CYLINDER ZERO POINT
1-1 Adjustment of plate tail edge skew zero point
1-2 Adjustment of plate leading edge skew zero point
1-3 Adjustment of zero point in horizontal direction
1-4 Adjustment of zero point in vertical direction
[2] MICRO ADJUSTMENT FOR STOPPING PLATE CYLINDER AT STANDARD POSITION
2-1 Preparatory adjustment
2-2 Adjustment of leading edge position for forward turn
2-3 Adjustment of tail edge position for forward turn
2-4 Adjustment of leading edge position for reverse turn
2-5 Changing the timing pulse
2-6 Adjustment of detection plate for stopping plate cylinder at standard position
[3] ADJUSTMENT OF CHANGING SPRING FORCE FOR PLATE TENTION
[4] ADJUSTMENT OF TAIL EDGE CLAMP UNIT POSITION
[5] ADJUSTMENT OF CLUTCH UNIT
5-1 Preliminary adjustment
5-2 Adjustment of large air cylinder lever
5-3 Adjustment of female clutch for turning plate tail clamp shaft (Outside of plate cylinder OP-S)
5-4 Adjustment of female clutch for turning plate lead clamp shaft (Outside of plate cylinder OP-S)
5-5 Adjustment of plunger for large air cylinder
5-6 Adjustment of clutch with gear (for moving tail edge clamp unit in forward and backward directions)
5-7 Adjustment of air cylinder (speed controller and proximity switch)
5-8 Work for completing operations
[6] Adjustment of retaining roller unit
6-11 1P, 3P
6-2 2P, 4P
[7] Manual operation of solenoid valve

[1] Adjustment of plate cylinder zero point

Provide four plates having the same picture as that of the plate (Fig.1) punched by the pin system.

1-1 Adjustment of plate skew zero point on the tail edge side (Fig.2)

[* NOTE: Be sure to remove the plate before adjustment.]

Adjust the zero point of the scale of the plate skew adjustment knob to provide 1 mm clearance between the plate skew adjustment lever and the scale and set the zero point to the mark of the lever. (M4 set screw)

1-2 Adjustment of plate skew zero point on the leading edge side (Figs. 1,2)

(1) Set the sheet skew scale of the front lay on the register unit to 0 on the scale of both OP-S and NOP-S.

(2) Insert the zero point adjustment tool up to its step into the zero point block hole (6mm diameter) of the NOP-S plate lead clamp of 1P. If unable to insert the tool, move the plate skew adjustment knob for insertion of the tool.
After the work is completed, pull out the tool.

(3) Verify that there is a uniform clearance (approx. 3mm) in the side wall between the clamp unit and the plate cylinder.

(4) Install the plate using the EPS. (1P up to 4P)

(5) Print with 1P and verify that the sheet and the picture are parallel. If they are not parallel, adjust the plate skew using the plate clamps.

(6) Print using 1P up to 4P, and make plate skew adjustment,horizontal and vertical adjustments for 2P and the rest so that the picture is fitted to 1P.

(7) Set the zero point of the skew adjustment knob to the mark on the plate lead clamp unit, from 1P up to 4P. (M4 set screw)

1-3 Adjustment of zero point in horizontal direction

(1) Make adjustments of 1-1 and 1-2 and proceed to the following.

(2) Turn the horizontal micro adjustment handle of 1P close to an intermediate position of the operating range.

(3) Print using 1P up to 4P, make micro horizontal adjustments of 2P and the rest, and set the picture to 1P.

(4) From 1P through 4P, reset the scale of the indicator for micro horizontal adjustment, to "0".

1-4 Adjustment of zero point in vertical direction(Fig.1).

(1) From 1P through 4P, turn the micro vertical adjustment handle to an intermediate position of the operating range.

(2)Print using 1P up to 4P, loosen the four screws on NOP-Side of the plate cylinder and move the plate cylinder so that the register marks of the leading edge side comes to a position 20 mm from the front edge of the sheet. Adjust plate
cylinder to set the register marks within the range of +/-0.2 mm and tighten the screws.

(3)From 1P through 4P, adjust the plate cylinder until the picture is properly set to the specified position using the micro vertical adjustment handle.

(4)From 1P through 4P, reset the scale of the indicator for micro vertical adjustment, to "0".

[2] MICRO ADJUSTMENT FOR STOPPING PLATE CYLINDER AT STANDARD POSITION

[* NOTE: Before inching, be sure to disengage the clutch, and verify that the clutch is disengaged.]

[* NOTE: Make adjustments with the plate being removed from the machine.]

2-1 Preparatory adjustment

(1) Status of components before adjustment:
Plate Lead clamp ..... Opened.
Plate tail clamp ..... Opened.
Plate tail clamp position ..... Advanced.

(2) Remove the plate cylinder safety cover (black) mounted to the inside of the OP-S frame. (2-M5)
After the following work is over, install the cover.

2-2 Adjustment of leading edge position for forward direction

(1) Set the selector switch of the EPS operation box to the plate mounting position and press the start switch to stop at the plate mounting standard position.

(2) After the plate cylinder is stopped at the standard position for plate mounting, set the air change-over valve of the pressure pump to OFF position
(E.X.P).

(3) Manually advance the lower male clutch to engage it with the female clutch for plate lead clamp shaft, and calculate the number of pulses to be changed while observing the difference of the outer circumference.
A change of one pulse moves the clutching position approximately 0.25 mm.

(4) Move back the lower male clutch.

(5) Set the air change-over valve of the pressure pump to ON position.

(6) Change the timing pulse described in 2-5.

(7) Set the selector switch to the neutral position once, repeat the operation from (1) through (6), and make adjustments until the accuracy of the plate cylinder mounting standard position is within
one pulse (0.25 mm).

2-3 Adjustment of tail edge position for forward turn

(1) Set the selector switch of the EPS operation box to the plate mounting position.

(2) After the plate cylinder is stopped at the standard position for plate mounting, set the air change-over valve of the pressure pump to OFF position (E.X.P).

(3) Set the selector switch of the EPS operation box to the plate removing position and press the start switch to stop the plate at the standard position for plate removing.

(4) Manually advance the upper male clutch to engage it with the female clutch for the tail edge clamp shaft, and calculate the number of pulses to be changed while observing the difference of the outer circumference. A change of one pulse moves the clutching position approximately 0.25 mm.

(5) Move back the upper male clutch.

(6) Set the air change-over valve of the pressure pump to ON position.

(7) Change the timing pulse described in 2-5.

(8) Return the selector switch to the neutral position once, repeat the operation from (1) through (7), and make adjustments until the accuracy of the plate cylinder mounting standard position is within one pulse (0.25 mm).

2-4 Adjustment of leading edge position for reverse direction

(1)When the adjustments of 2-1 through 2-3 are completed, proceed to the following.

(2) Accomplish all the plate mounting operations. Set the selector switch of the EPS operation box to the plate removing position, and press the start switch to remove the plate. And the plate is completely discharged from the plate tail clamp (the position of the plate cylinder reversed 20 degrees from the plate removing standard position).

(3) Press the start switch again. The machine makes reverse turn and then immediately set the air change-over valve of the pressure pump to OFF position (E.X.P).

(4) Stop the machine at the standard position of the leading edge.

(5) Manually advance the lower male clutch to engage it with the female clutch for the plate lead clamp shaft, and calculate the number of pulses to be changed while observing the difference of the outer circumference.

(6) Move back the lower male clutch.

(7) Since the plate lead clamp is closed, insert the plate clamp handle into the hole of the plate lead clamp shaft and turn it until the "click" of the snubber B on the outside of the plate cylinder OP-S is heard. (A this time, the plate clamp is opened.)

(8) Set the air change-over valve of the pressure pump to ON position.

(9) Change the timing pulse described in 2-5.

(10) Return the selector switch to the neutral position once, repeat the operation from (2) through (10), and make adjustments

2-5 Changing timing pulse

Use the delivery unit operation panel (operation side) to change the value of the timing pulse that set to the timing number, and make micro adjustments of the standard position.

TABLE 1 : Timing number per unit(1P-4P)

	1P	2P	3P	4P
Leading edge reference position for forward turn	77	80	83	86
Tail edge reference position for forward turn	78	81	84	87
Leading edge reference position for reverse turn	79	82	85	88

(1) A CPU board is provided at the upper left side in No.1 control panel (feeding NOP-S). There is a row of nine black rotary switches under the CPU board.
Set the third rotary switch S8 from the right end to "2". (Set the original setting to "0")

(2) Press the clear key on the delivery operation panel.

(3) The ENT key LED comes on.

(4) Input the timing number (Table 1) for micro adjustment to stop the standard position.

(5) Press the ENT key.

(6) The present address will be displayed on the number of printed sheet display unit. (Timing number on the left side and the timing pulse on the right side)

(7) Input the pulse values to be changed (calculated from 2-2 to 2-4).
A change of one pulse moves the clutch position 0.25 mm.
(To move the plate cylinder to forward direction side, add values.
To move the plate cylinder to reverse direction side, decrease values)

(8) Press the ENT key.

(9) When all adjustments are completed, **input 99** (if the power is shut off without inputting 99, input data will be erased).

(10) Press the ENT key.

Return the rotary switch S8 to the original setting "0".

2-6 Adjustment of detection plate for plate cylinder standard position stop

[* NOTE: The following operations are not conducted normally.]

In case the detector plate of the plate cylinder has been moved, only the unit concerned needs adjustments.

Before working, remove the cover of this machine of the plate cylinder unit on the OP-S side.

When the machine is turned in forward direction, adjust the detection plate so that the detection LED of the proximity sensor comes on at certain angle of the machine shown in the table below. (M5 cap screw)

Adjustment range is ±0.5 degrees.

TABLE 2

	1P	2P	3P	4P
Machine angle	136°	88°	108°	60°

After detection plate position is adjusted, the initial set value of the pulse for plate stopping at standard position is as shown in the table below. Input the values of the following table according to 2-5 and carry out the work from 2-1 through 2-5.

TABLE 3 : Initial values of timing pulse of each color

	1P/2P/3P4P
Leading edge reference position for forward turning	899
Tail edge reference position for forward turning	526
Leading edge reference position for reverse turning	899

[3] ADJUSTMENT OF CHANGING SPRING FORCE FOR PLATE SETTING (FIG.2)

[* NOTE: Make adjustments with the machine plate being removed.]

(1) Remove the safety cover (red) of the plate cylinder clamp units. (3-M5)

(2) With the plate tail clamp unit in advancing state, turn the nut for adjustment so that there is no clearance between the nut and the lever when the spring force changing lever (at 4 locations) is inserted between the adjusting nuts. (To turn the nut, securely hold the screw assembly with a tool, and use a hexagon wrench)

(3) Move the lever and ensure that the lever can be inserted between the nut and the clamp unit. For

adjustment, turn the nut to a degree where slight resistance is felt when the lever enters between the nut and the clamp unit.

(4) Reinstall the safety cover (red) of the plate cylinder clamp units. (3-M5)

[4] ADJUSTMENT OF PLATE TAIL CLAMP UNIT POSITION (FIGS. 2,13)

The reference clearance between the plate tail clamp unit and the plate cylinder wall is 1 ± 0.2 mm, provided that the clearance of both ends must be the same. Adjustments are shown below.

(1) Verify that the the plate tail clamp unit is at the advanced position.

(2) Remove the safety cover (red) of the plate cylinder clamp units. (3-M5)

(3) Tighten the manual plate setting screws (M6, white) and adjust the clearance between the plate tail clamp unit and the wall of the plate cylinder to approximately 0.5 mm.

(4) Loosen the screws (M6) of the lever (at 2 locations) for moving the plate tail clamp unit.

(5) Loosen the manual plate setting screws and adjust the clearance between the plate tail clamp unit and the wall of the plate cylinder to 1 ± 0.2 mm.

(6) Contact the cam follower of the lever to the plate tail clamp unit, and tighten screws (M6).

(7) Loosen the manual plate setting screws.

(8) Check for the clearance between the plate tail clamp unit and the wall of the plate cylinder.

(9) Install the safety cover (red) of the plate cylinder clamp unit. (3-M5)

[5] ADJUSTMENT OF CLUTCH UNIT

[* NOTE: Before inching the machine, be sure to disengage the clutch.]

5-1 Preliminary adjustment

(1) Adjust the following components to the following conditions before starting adjustments.

Plate Lead clamp ..... Opened.

Plate tail clamp .... Opened.

Tail edge clamp unit ..... Advanced.

(2) Remove the plate cylinder safety cover (black) mounted to the inside of the OP-S frame. (2-M5 cap screws)

(3) Remove the ink unit and main unit covers on the OP-S of this machine.

5-2 Adjustment of large air cylinder (FIGS.8,6,10)

(1) Set the air change over valve of the pressure pump to OFF position (E.X.P).

(2) Loosen the cap screw (M5) for securing the plunger and move the plunger back so that the plunger tip does not hit the lever when the large air cylinder is contracted.

(3) Inch to turn the the plate cylinder and stop it at the reference position of the tail edge.

(4) Manually advance the upper male clutch to engage it with the female clutch for the plate tail clamp shaft. At this time, turn the machine with a manual handwheel for micro adjustment until the outer circumference of the clutch is fit within (±0.1 mm).

(Be sure to turn the machine manually. Inching, if used to turn the machine, may damage parts)

Move the upper male clutch back.

(5) Loosen the cap screw (M8) of the large air cylinder lever on the outside of the frame of this machine on the OP-S side, allowing the upper male clutch and the lower male clutch to turn freely.

(6) With the large air cylinder contracted, advance the lower male clutch to engage it with the female clutch with gear. Manually turn the lower male clutch (counterclockwise as seen from OP-S) in order to eliminate the clearance in the portion specified in Fig. 10.

In this condition, tighten the screw (M8) for the large air cylinder lever.

(7) Verify the state of (6) by moving the lower male clutch back and forth.

(8) Move back the lower male clutch to the frame.

5-3 Adjustment of female clutch for turning plate tail clamp shaft (Outside of plate cylinder OP-S) (FIGS.2,10)

After the adjustment of 5-2, proceed to the following items.With the large air cylinder contracted, engage the upper male clutch with the female clutch for plate tail clamp shaft, and verify that there is no clearance in the portion specified in Fig. 10. After the work is over, be sure to move the male clutch back toward the frame. Adjust as follows if the clearance is large or the clutch is hard to be engaged.

(1) Loosen snubber A on the outside of the plate cylinder OP-S and adjust so that the tip does not interfere with the female clutch for the tail edge clamp shaft.

(2) Loosen the round screw that secures the block for mounting the snubber. (2-M6)

(3) While taking care to prevent the block from contacting the female clutch with gear, adjust the position and tighten the round screw.

(4) Tighten the snubber A to an appropriate position. (Do not tighten excessively)

(5) Insert the the clamp handle into the hole of the plate clamp shaft, and verify that the "click" is heard when the handle is turned until the plate clamp is opened.

(6) When the large cylinder is contracted, engage both upper and lower male clutches with each female clutch, and verify that there is no clearance in the portion specified in Fig. 10.

(7) Move both male clutches back toward the frame.

5-4 Adjustment of female clutch for turning plate lead clamp shaft (Outside of plate cylinder OP-S) (Fig.11)

(1) Inch to turn the plate cylinder and stop it at the reference position of the leading edge.

(2) Manually advance the lower male clutch to engage it with the female clutch for plate lead clamp shaft. At this time, turn the machine with a manual handwheel for micro adjustment until the outer circumference of the clutch is fit within (±0.1 mm).

(Be sure to turn the machine manually. Inching, if used to turn the machine, may damage parts.)

Move the lower male clutch back.

(3) With the large air cylinder contracted, engage the lower male clutch with the female clutch for plate lead clamp shaft, and verify that there is no clearance in the portion specified in Fig. 11. Be sure to move back the male clutch toward the frame when the work is over.

Adjust as follows if the clearance is large or the clutch is hard to be engaged.

(4) Inch and turn the plate cylinder to an appropriate operating position. Loosen the snubber B on the outside of the plate cylinder OP-S and adjust so that the tip does not interfere with the female clutch for plate lead clamp shaft.

(5) Loosen the cap screw that secures the block for mounting the snubber. (2-M6)

(6) Adjust the position and tighten the screw.
(7) Tighten the snubber B to an appropriate position. (Do not tighten excessively)
(8) Insert the clamp handle into the hole of the plate lead clamp "click" is heard when the handle is turned until the plate clamp is opened.
(9) Inch to turn the plate cylinder and stop it at the reference position of the leading edge.
(10) Manually advance the lower male clutch to engage it with the female clutch for the plate lead clamp shaft. At this time, turn the machine with a manual handwheel for micro adjustment until the outer circumference of the clutch is fit within (+/-0.1 mm).
(Be sure to turn the machine manually. Inching, if used to turn the machine, may damage parts.)
(11) When the large cylinder is contracted, engage the lower male clutch with the female clutch for the plate lead clamp shaft, and verify that there is no clearance in the portion specified in Fig. 11.
(12) Move back the lower male clutch toward the frame.

5-5 Adjustment of plunger for large air cylinder

Adjust the large cylinder using the plunger to return 3 mm from the contracted state and extended state.
(1) Loosen the cap screw for securing the plunger. (M5)
(2) With the large air cylinder being contracted, adjust the plunger to move in and out so as to cause the lever to contact slightly with the plunger tip.
(3) Move the lever to provide a 3 mm clearance between the lever and the plunger.
(4) Without moving the lever, adjust the plunger to move in and out so as to cause the lever to contact slightly with the plunger tip.
(5) Tighten the cap screw for securing the plunger. Do not tighten the screw excessively because the plunger tip movement may become impossible.
(6) With the large air cylinder being extended, adjust the plunger to move in and out so as to cause the lever to contact slightly with the plunger tip.
(7) Move the lever to provide a 3 mm clearance between the lever and the plunger.
(8) Without moving the plunger, adjust the plunger to move in an out so as to cause the lever to contact slightly with the plunger tip.

(9) Tighten the cap screw for securing the plunger. Do not tighten the screw excessively because the plunger tip movement may become impossible.

(10) With the large air cylinder being contracted and extended respectively, verify that the lever and the plunger body do not contact each other.

5-6 Adjustment of clutch with gear (for moving plate tail clamp unit in forward and backward directions) (Fig.12)

(1) Inch to turn the plate cylinder to an appropriate operating position.

Insert the clamp handle into the hole of the lever with gear on the outside of the plate cylinder OP-S side, move the handle in reverse turning direction of the plate cylinder, and move the plate tail clamp unit to the retracted position. Use great care during this adjustment to prevent injury by the handle which is turned by the reaction force of the spring.

2) Inch to turn the plate cylinder and stop it at the reference position of the tail edge.

(3) Manually advance the upper male clutch to engage it with the female clutch for the plate tail clamp shaft. In doing so, turn the machine with a manual handwheel for micro adjustment until the outer circumference of the clutch is fit within (+/-o.1 mm). (Be sure to turn the machine manually. Inching, if used to turn the machine, may damage parts) Move back the upper male clutch.

(4) After the large air cylinder is extend and then retracted 3 mm by the plunger, advance the lower male clutch to engage with the female clutch with gear while the lever and plunger tip are only barely contacting. In doing so, verify that the clearance on both sides of the clutch groove is uniform (approximately 1 mm clearance on both sides).

If not uniform, make the following adjustments.

(5) Inch to turn the plate cylinder to an appropriate operating position. Loosen the set screw for fixing the stopper.

(6) Adjust the stopper screw. (Clockwise turn of the stopper bolt turns the clutch with gear clockwise as seen from the OP-S side)

(7) Tighten the set screw for fixing. Conduct operations from (2) through (6).

5-7 Adjustment of air cylinder (speed controller and proximity switch) (Figs. 8,9)

(1) Adjustment speed controller of large air cylinder (at 2 locations)

Loosen the lock nut and loosen the adjustment knob fully.

Tighten the lock nut.

(2) Adjustment of speed controller of air cylinder for male clutch (at 2 locations)

Loosen the lock nut (black), fully close the adjustment knob, and return the knob 3/4 turns from the fully closed position.

After the adjustment, tighten the lock nut.

(3) Adjust the proximity sensor position so that the detection LED of the proximity sensor comes on in both cases where the large air cylinder is contracted (when the plunger is contracted) and the air cylinder is returned 3 mm by the plunger.

(Provide additional coverage to the return side of 3 mm.)

Adjust the proximity sensor position so that the detection LED of the proximity sensor comes on in both cases where the large air cylinder is extended (when the plunger is contracted) and the air cylinder is returned 3 mm by the plunger.

(Provide additional coverage t the return side of 3 mm.)

(4) Adjustment of proximity sensor of air cylinder for male clutch

When the male clutch is retracted toward the frame. Fasten the proximity sensor for pull side to the center position of a range where the detection LED comes on with the male clutch being retracted toward the frame.

When the male clutch is engaged with the female clutch, fasten the proximity sensor for push side to the center position of a range where the detection LED comes on with the plate cylinder being at the standard position "0" for micro horizontal adjustment.

5-8 Work for completing operations (Figs. 10,6)

(1) Inch to turn the plate cylinder to an appropriate operating position.

Insert the clamp handle into the hole of the lever with gear on the outside of the plate cylinder OP-S side, move the handle in the plate cylinder reverse turning direction, and move the plate tail clamp unit to the advanced position.

Use great care during this adjustment to prevent injury by the handle which is turned by the reaction force of the spring.

(2) Open the plate lead clamp and the tail clamp at a position where the snubber clicks.

(3) Set the air change-over valve of the pressure pump to ON position.

(4) Install the safety cover (black) fixed to the inside of the OP-S frame. (2-M5 cap screw)

(5) Install the cover on the ink unit and main unit covers on the OP-S side of the machine.

[6] ADJUSTMENT OF HOLDING ROLLER

6-1 1P, 3P (Figs.6,14,15)

(1) Remove the cover on the plate cylinder unit of the OP-S and NOP-S of the machine.

(2) For position of the plate cylinder which comes in contact with the plate retaining roller, select a position where the clamp units are not present.

(3) Check the retaining roller for smooth rotation. If not rotating smoothly, loosen and adjust the the mounting screw of the block on both sides of the roller. (M6 cap screw)

(4) Set the hole of the guide block inside the frame to the hole of the frame (using a 6 mm diameter reference pin), and mount the guide block so that the top of the guide block is parallel to the machine frame.

(5) With the plate retaining air cylinder on the outside of the frame being contracted, loosen the lock screw of the lever A and move the lever B for adjustment in a position that the pin mounted on both sides of the roller support arm is set into the groove of the guide block.

(6) Set the air change-over valve of the pressure pump to OFF position.

(7) With the plate retaining air cylinder being contracted, set the pin of the roller support arm into guide groove, and push the holding roller unit into the plate cylinder direction with hand.

If the roller unit does not move smoothly, adjust related parts to ensure smooth moving.

(8) Set the air change-over valve of the pressure pump to ON position.

(9) Adjustment of speed controller (each at 2 locations on both sides)

Loosen the lock nut, fully tighten the adjustment knob and then return 2 turns, and tighten the lock nut.

(10) Install the cover on the plate cylinder unit of the OP-S and NOP-S of the machine.

6-2 2P,4P (Figs.6,16,17,18)

(1) Remove the cover on the plate cylinder unit of the OP-S and NOP-S of the machine.

(2) For position of the plate cylinder which comes in contact with the plate retaining roller, select a position where the clamp units are not present.

(3) Check the retaining roller for smooth rotation. If not rotating smoothly, loosen and adjust the mounting screw of the block on both sides of the roller. (M6 cap screw)

(4) Loosen and adjust the lock screw of the lever D and the lever F in a position that the pin mounted on both sides of the roller support arm smoothly gets into the U groove of the lever C and the lever F.

(5) Set the air change-over valve of the pressure pump to OFF position (E.X.P)

(6) With the pin being set in the U groove, push the retaining roller unit with hand into the plate cylinder direction, along the guide of the guide block on both sides inside of the frame.

If the roller unit does not move smoothly, adjust the guide block position upward or downward.

(7) Set the air change-over valve of the pressure pump to ON position.

(8) Remove the roller unit from the U groove and check the item (4) again for the movement of related components.

(9) Remove the roller unit from the U groove and turn 180 degrees.

Loosen and adjust the lock screw of the holding block in a manner that the pin mounted on both sides of the roller support arm is held by the holding block on both sides.

(10) Adjustment of speed controller (each 2 locations on both sides)

Loosen the lock nut, fully tighten the adjustment knob and then tighten 2 turns the lock nut.

(11) Install the cover on the plate cylinder unit of the OP-S and OP-S side of the machine.

[7] Manual operation of solenoid valve

[* NOTE: DO NOT ROTATE THE MACHINE.]

[* NOTE: CLAMPS OF THE PLATE CYLINDER MUST NOT BE SEEN.]

[* NOTE: DO NOT PUT HANDS NEAR THE CYLINDER IN OPERATION.]

[* NOTE: AFTER MANUAL OPERATION, BE SURE TO UNLOCK MANUAL BOTTON OF SOLENIOD VALVE]

(1) Solenoid valve unit for 1P and 2P is mounted on the bed frame under 2P, and solenoid valve unit for 3P and 4P is mounted on the bed frame under 3P. Loosen the fixing screw of the step and move the step until the solenoid valve unit is seen.

(2) Check the proper movements of related parts.

Press the manual button to activate each air cylinder.

When pressed and turned, the manual button is locked. Be sure to unlock the manual button which has been locked.

TABLE 4 : Air cylinder status when manual button is pressed

Air cylinder	When button is not pressed	Button A	Button B
Large cylinder	Free	Extended	Contracted
Upper male clutch	Contracted	Extended	
Lower male clutch	Contracted	Extended	
1P, 3P retaining roller	Contracted	Extended	
2P, 4P retaining roller	Extended	Contracted	

00

EPS ADJUSTMENT MANUAL 1

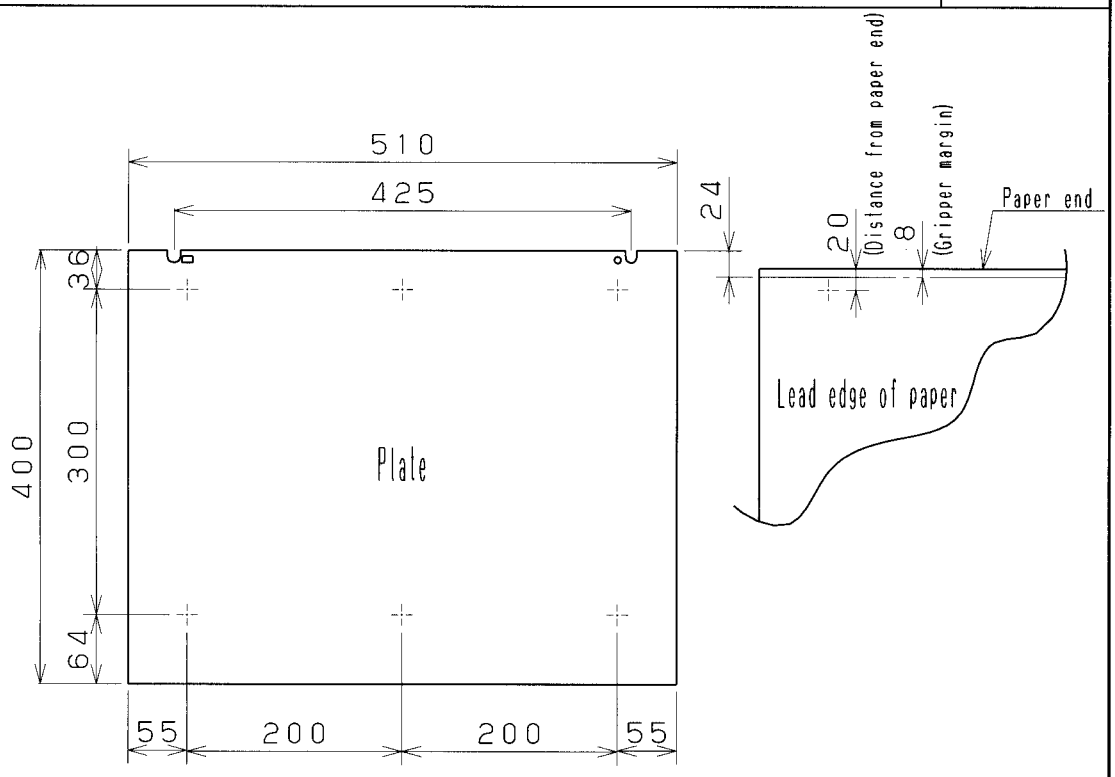

FIG. 1 : Plate and Printing Paper for Zero Point Adjustment

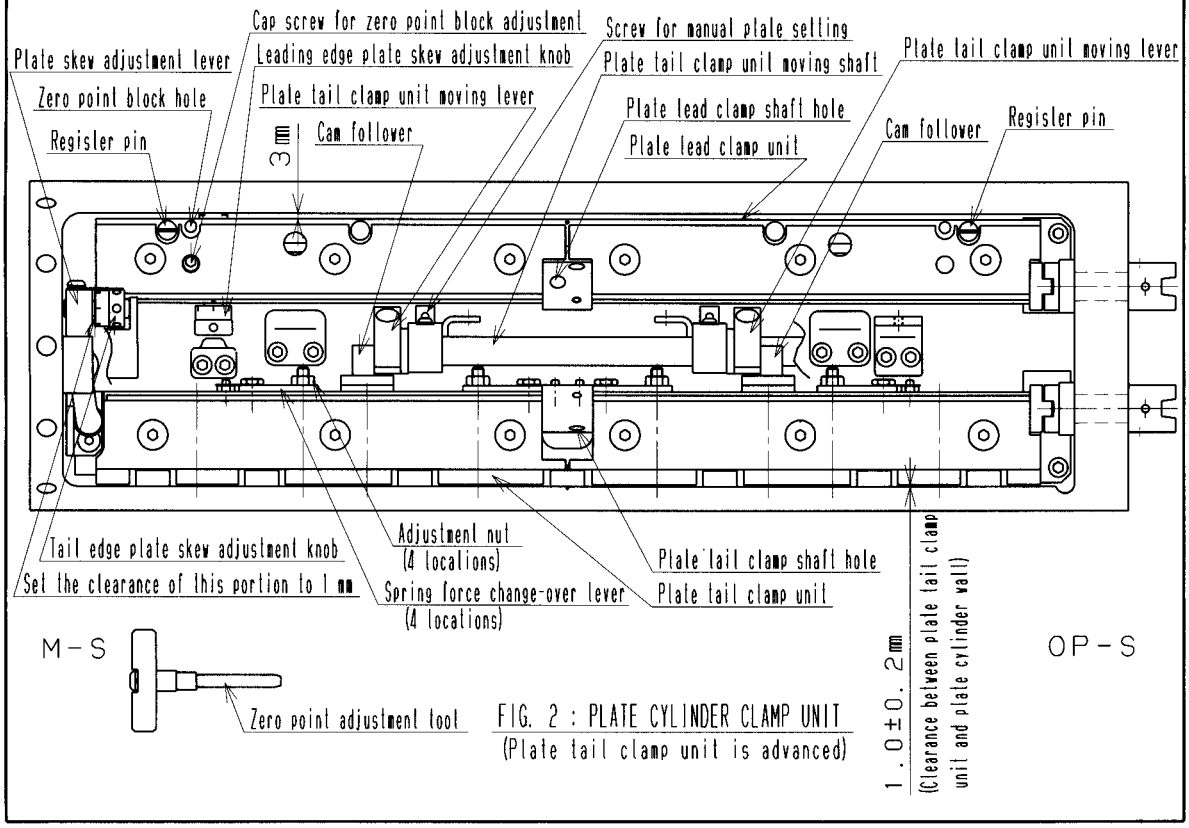

FIG. 2 : PLATE CYLINDER CLAMP UNIT
(Plate tail clamp unit is advanced)

00

EPS ADJUSTMENT MANUAL 2

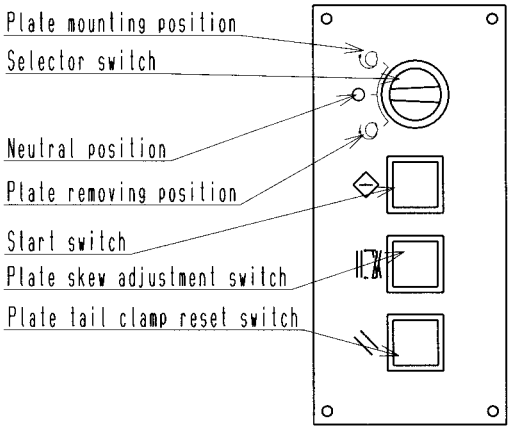

FIG. 3 : EPS OPERATION BOX

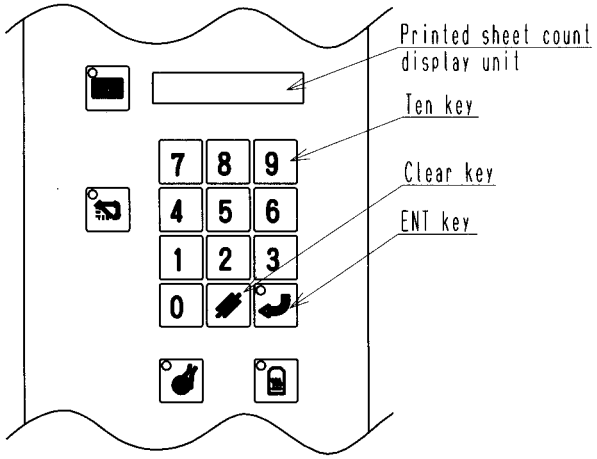

FIG. 4 : DELIVERY OPERATION UPPER PANEL UNIT (OPERATION SIDE)

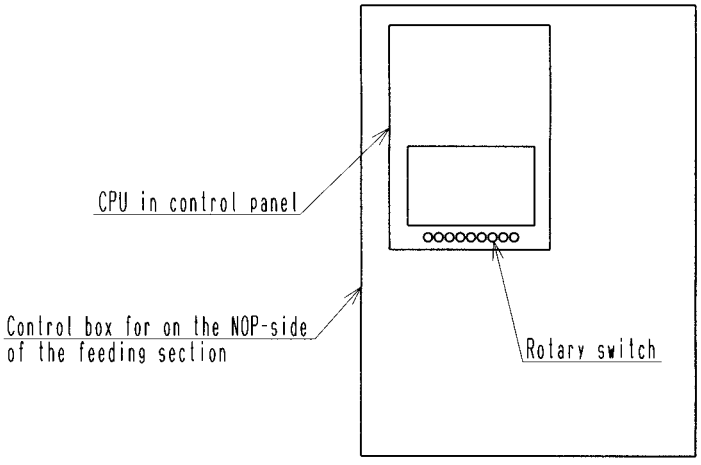

FIG. 5 : INSIDE OF CONTROL PANEL FOR FEEDING ON M-S SIDE

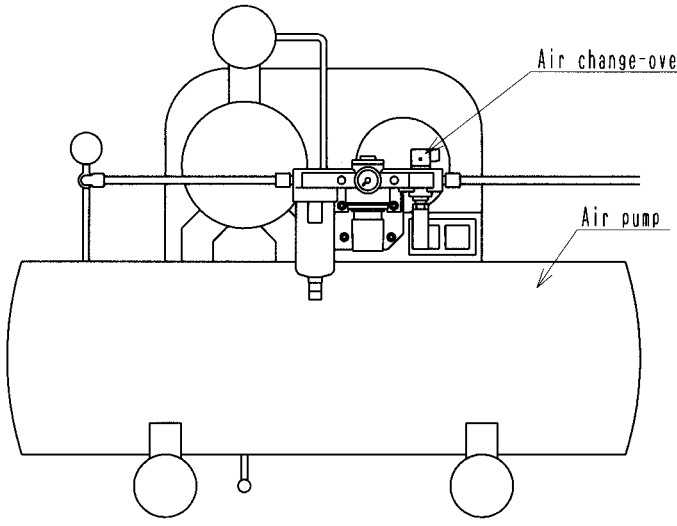

FIG. 6 : PRESSURE PUMP

00

EPS ADJUSTMENT MANUAL 3

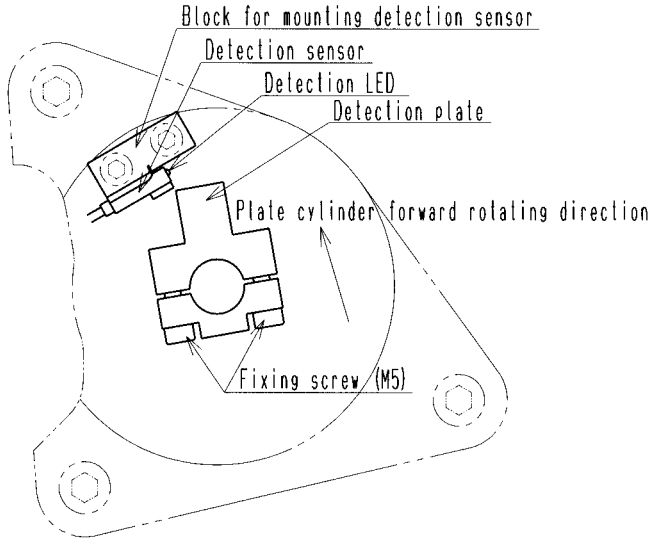

FIG. 7 : PLATE CYLINDER DETECTION PLATE SECTION
(OUTSIDE OF PLATE CYLINDER OP-SIDE)

00

EPS ADJUSTMENT MANUAL 4

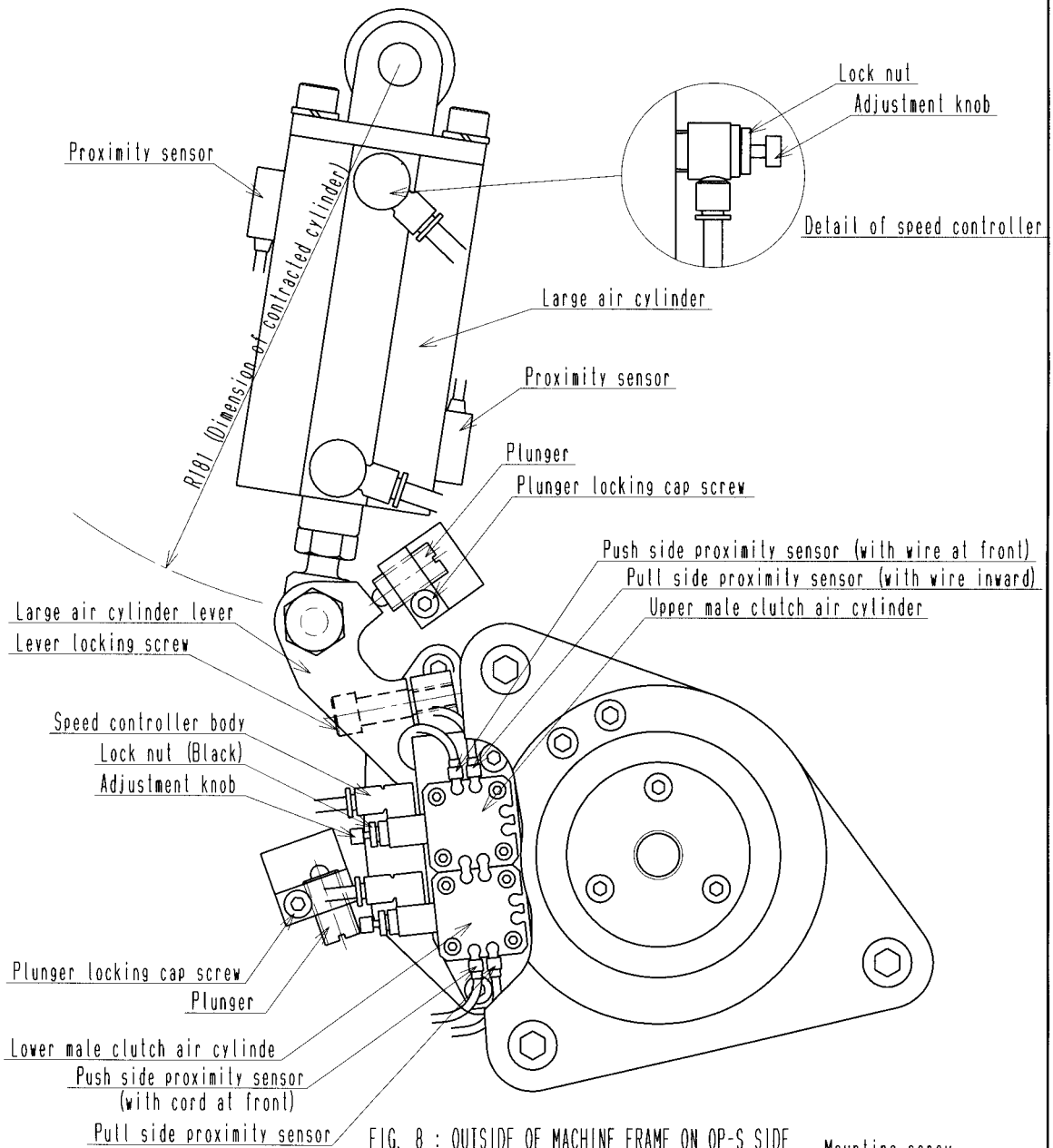

FIG. 8 : OUTSIDE OF MACHINE FRAME ON OP-S SIDE

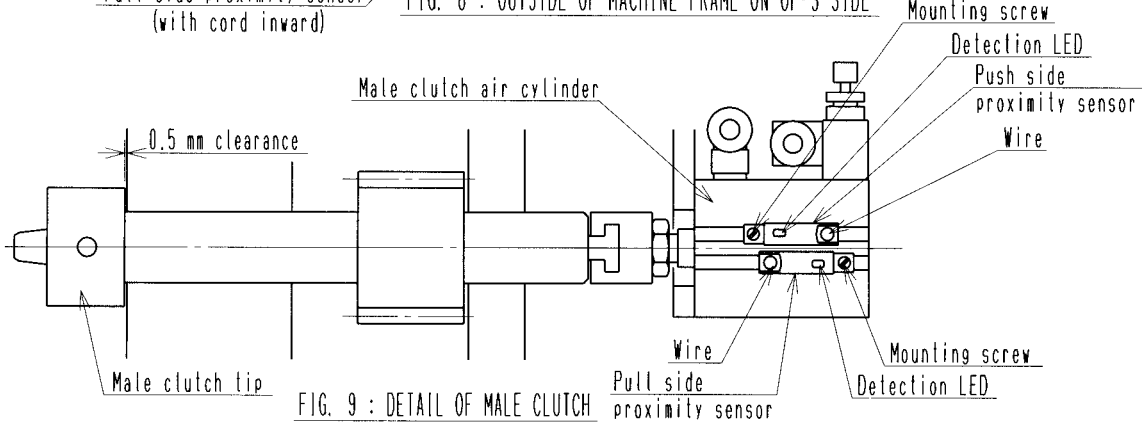

FIG. 9 : DETAIL OF MALE CLUTCH

00

EPS ADJUSTMENT MANUAL 5

Plate lead clamp : Opened.
Plate tail clamp : Opened.
Plate tail clamp unit : Advanced.

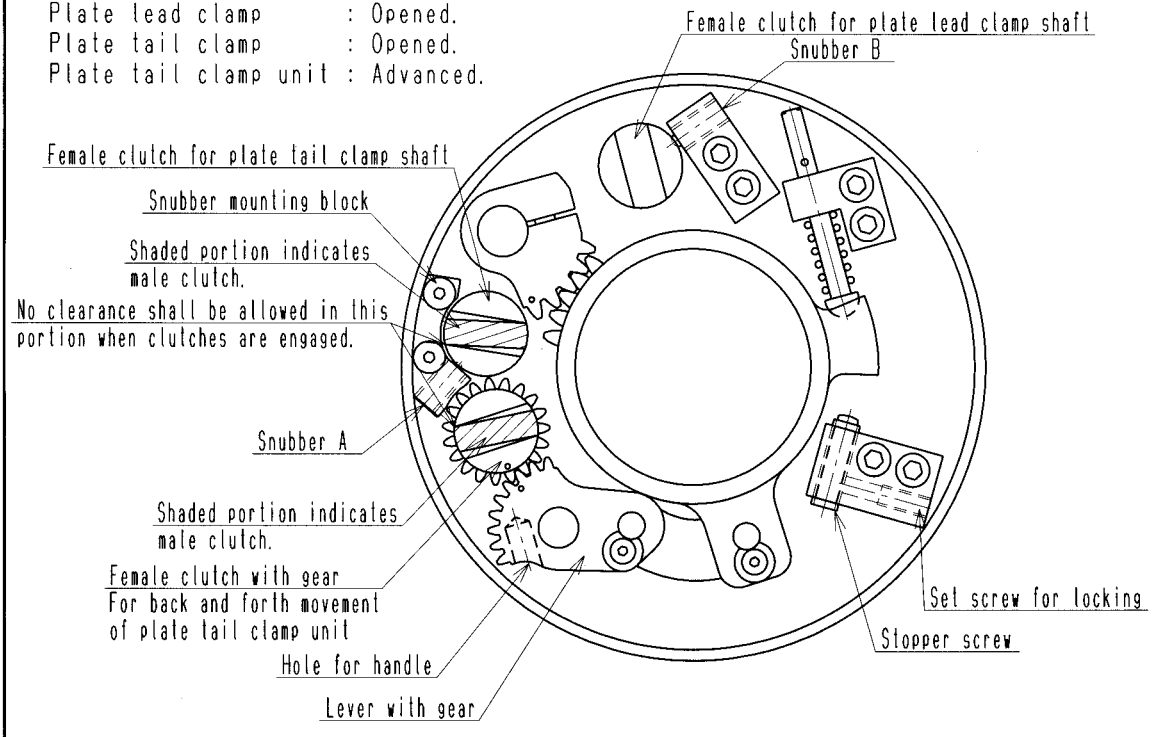

FIG. 10 : OUTSIDE OF PLATE CYLINDER OP-SIDE
(Plate cylinder stopped at tail edge standard position)

Plate lead clamp : Opened.
Plate tail clamp : Opened.
Plate tail clamp unit: Advanced.

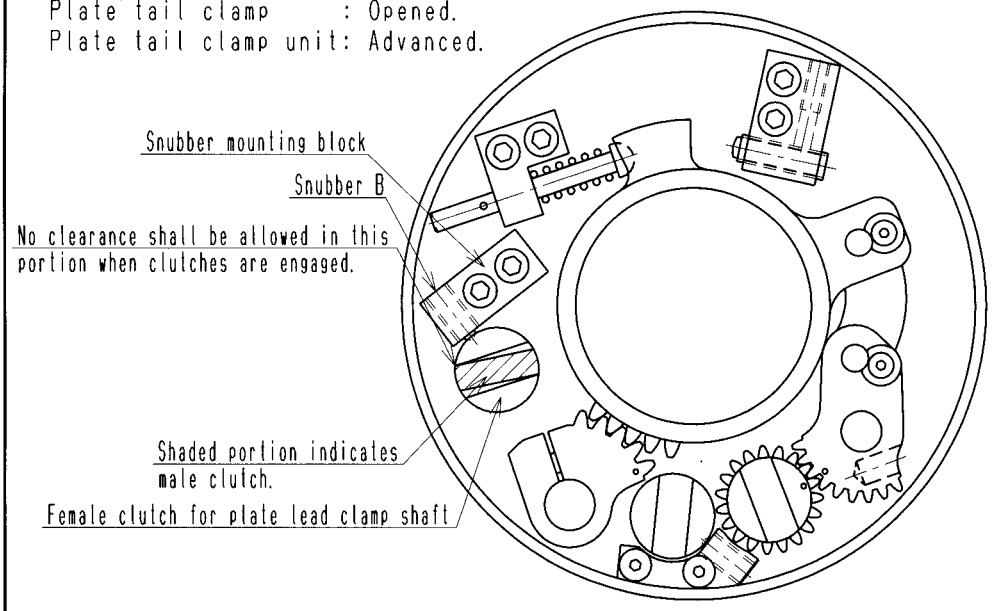

FIG. 11 : OUTSIDE OF PLATE CYLINDER OP-SIDE
(Plate cylinder stopped at leading edge standard position)

00

EPS ADJUSTMENT MANUAL 6

Plate Lead clamp : Opened.
Plate tail clamp : Opened.
Plate tail clamp unit: Retracted.

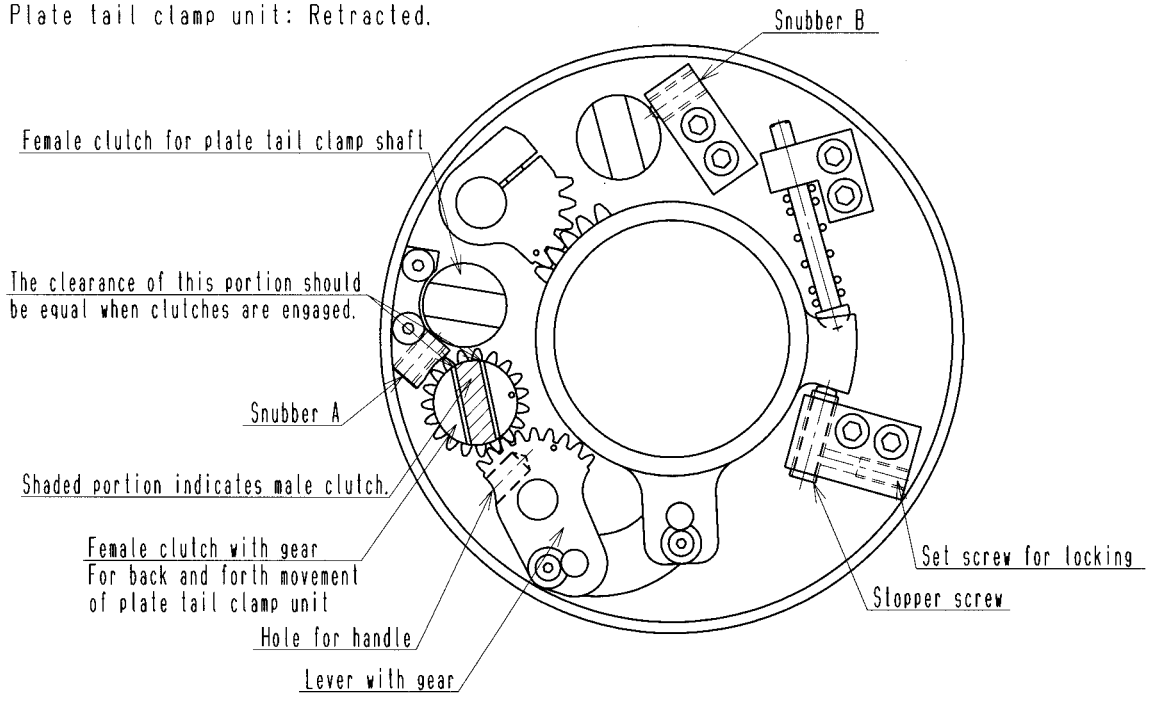

FIG. 12 : OUTSIDE OF PLATE CYLINDER OP-SIDE
(Plate cylinder stopped at tail edge standard position)

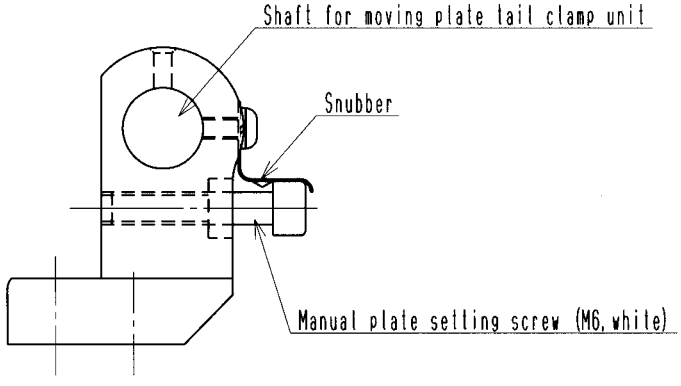

FIG. 13 : MANUAL PLATE TENTION UNIT
(Figure shows the standard position when EPS is operated)

00

EPS ADJUSTMENT MANUAL 7

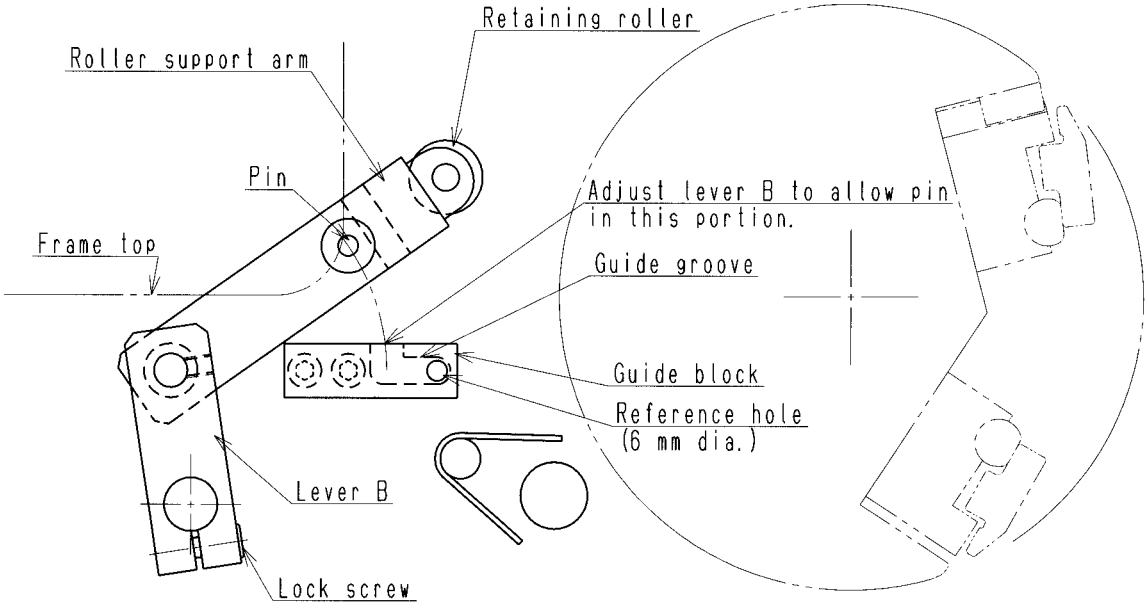

FIG. 14 : 1P, 3P RETAINING ROLLER ADJUSTMENT
(Inside of frame)

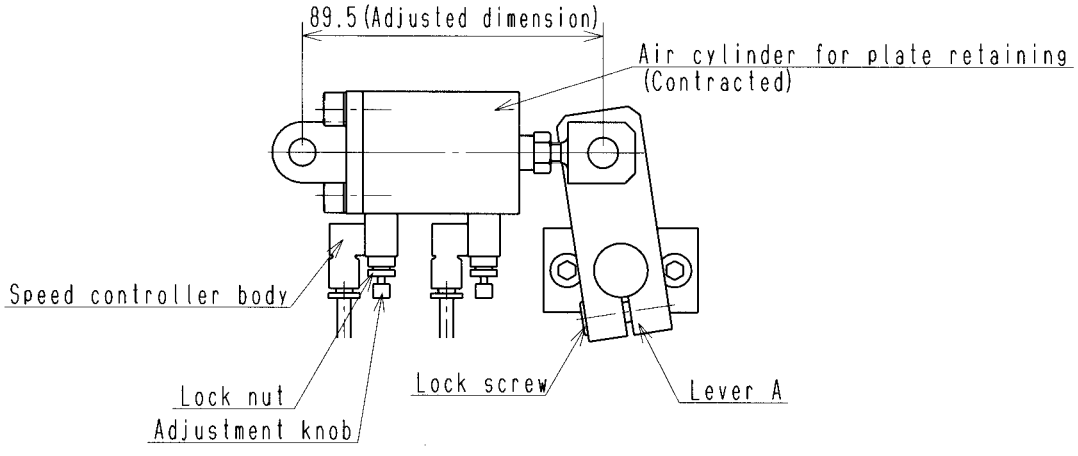

FIG. 15 : 1P, 3P RETAINING ROLLER ADJUSTMENT
(Outside of both frames of OP-S and NOP-S)

00

EPS ADJUSTMENT MANUAL 8

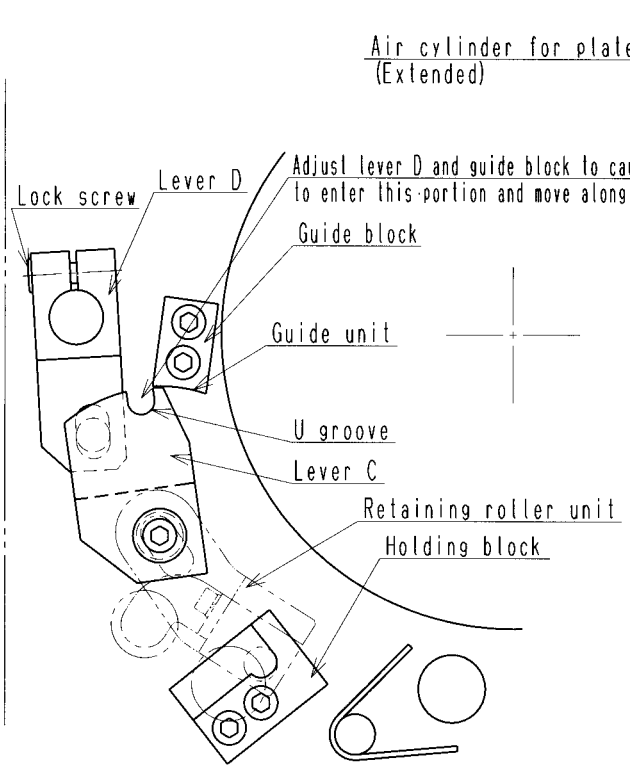

FIG. 16 : 2P, 4P RETAINING ROLLER ADJUSTMENT
(Inside of NOP-S)

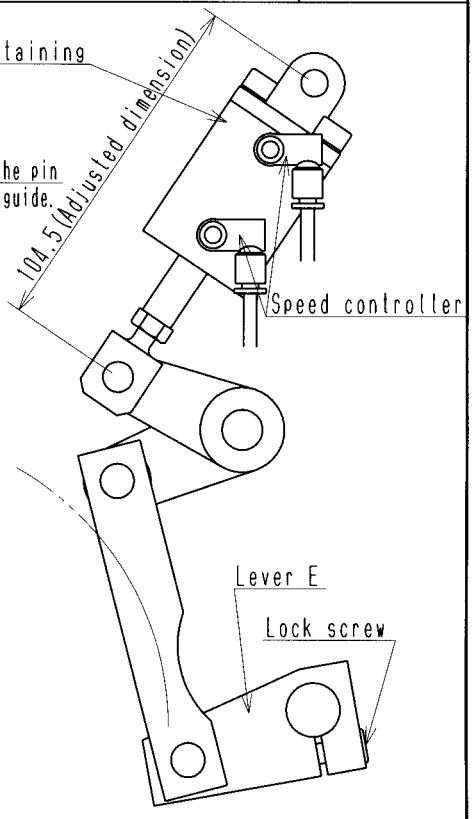

FIG. 17 : 2P, 4P RETAINING ROLLER ADJUSTMENT
(Outside of NOP-S)

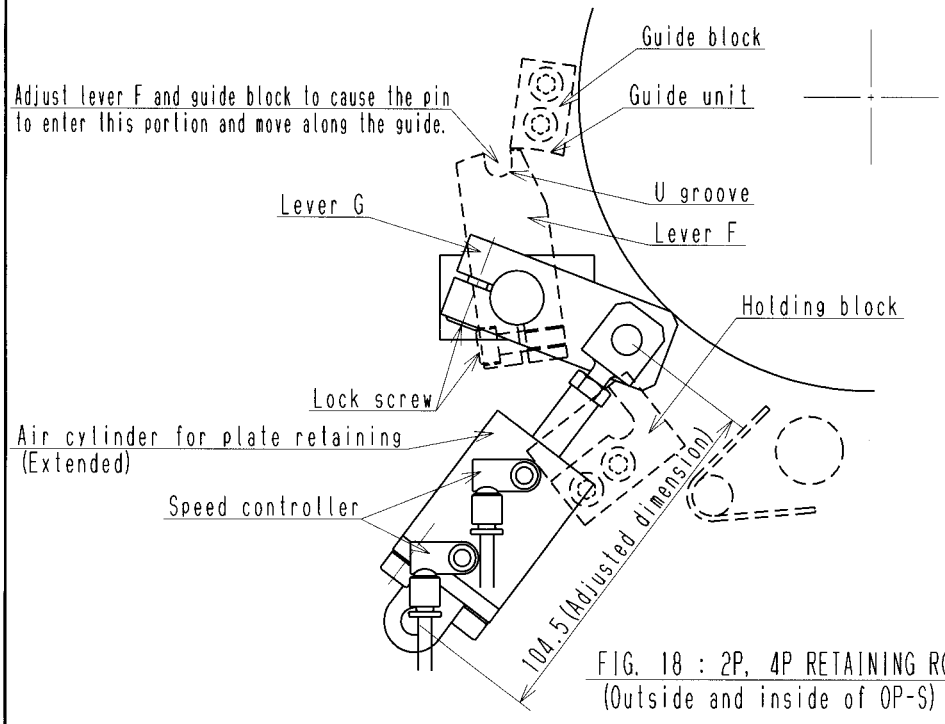

FIG. 18 : 2P, 4P RETAINING ROLLER ADJUSTMENT
(Outside and inside of OP-S)

00

EPS ADJUSTMENT MANUAL 9

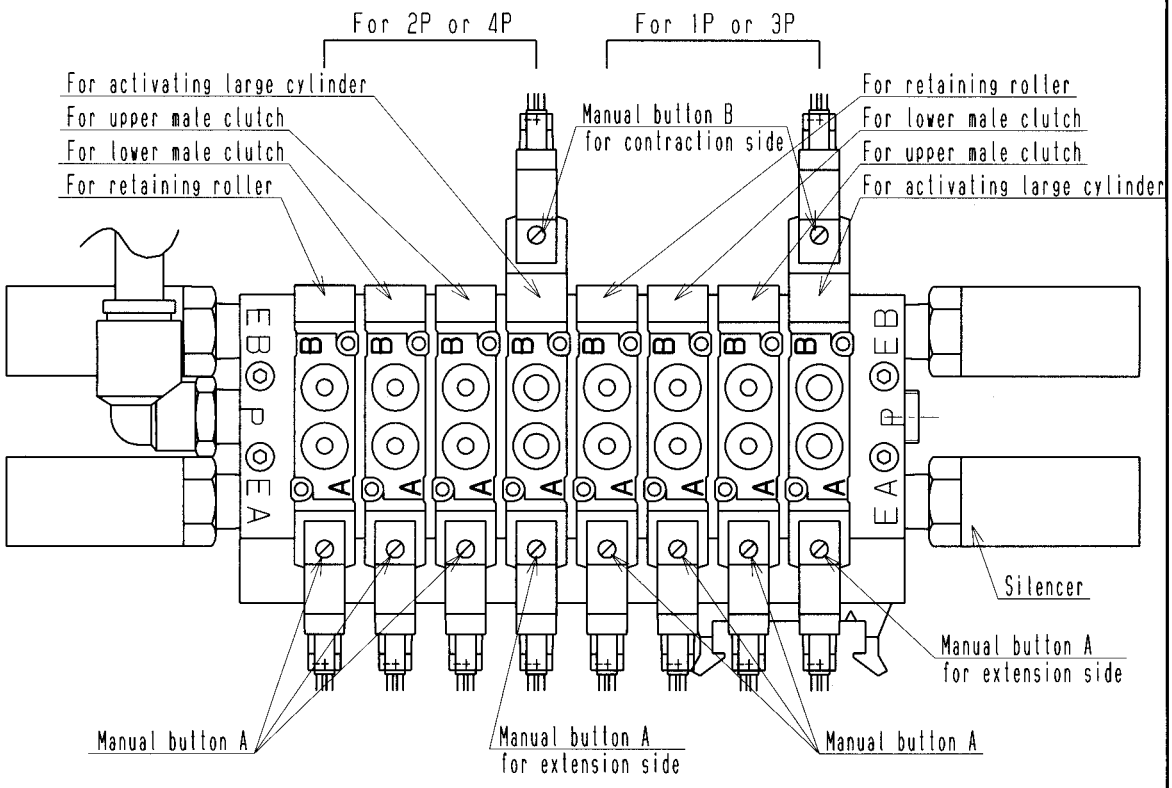

FIG. 19 : DETAIL OF SOLENOID VALVE PARTS

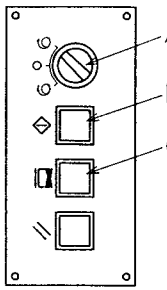

1

Bend the tail edge of the plate.
Open the safety cover on the plate cylinder side.
Set the selector switch "A" to "plate mounting position".
(P-B impression comes on automatically)
Press the start switch "B".
(The press runs at low speed and stops at the standard position on the leading edge side for plate mounting)

Conformation of EPS clamp status:
[Clamp on the lead edge side: Opened]
[Clamp on the tail edge side: Opened]
[Clamp position of the tail edge side: Advanced position]

2

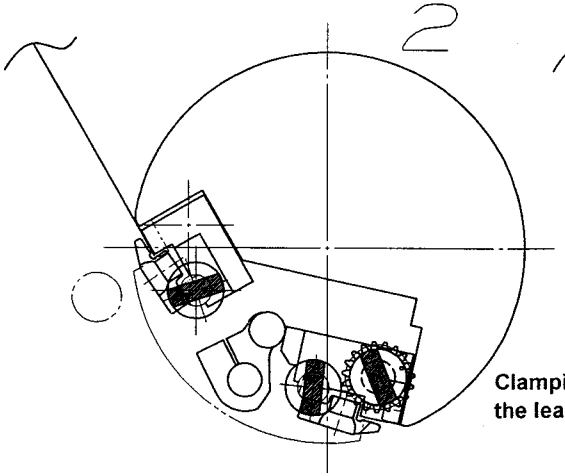

Insert the plate into the lead clamp.
Press the start switch "B".

3

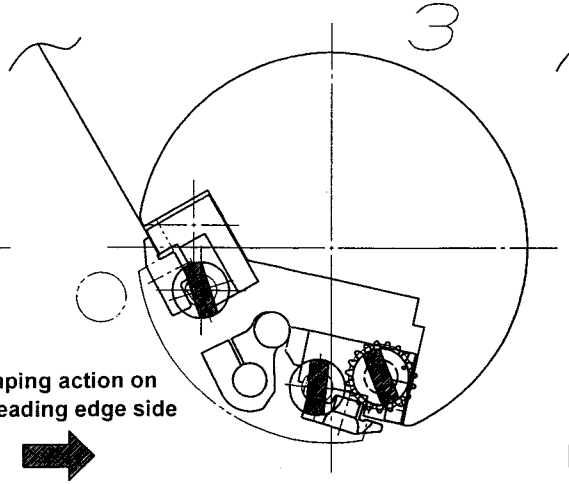

Clamping action on the leading edge side

1. The bottom male-clutch activates toward to the plate cylinder for engaging with female clutch.
2. The engaged clutch rotates to count-clockwise the clamp shaft for clamping.
3. The male clutch disengages to back the original position.

The press rotates 20 into forward direction at low speed.

4

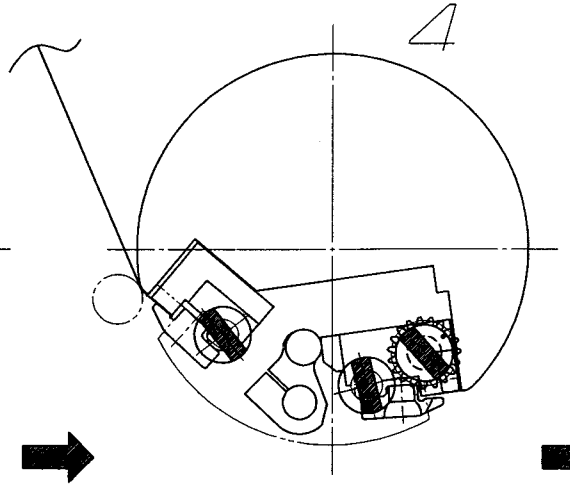

The retaining roller retains the plate.
Press the start switch "B".

図 歴	担 当	年 月 日
00		

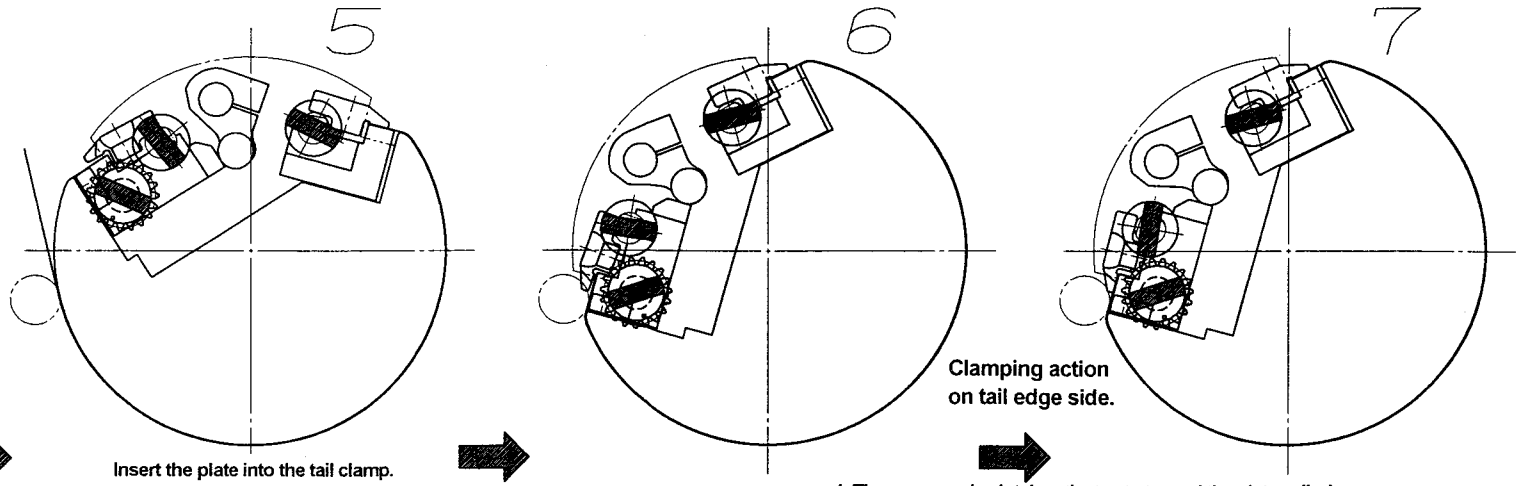

The press rotates 205 into forward direction at low speed.

Insert the plate into the tail clamp.
Press the start switch "B".

The press rotates by the standard position on tail edge side.

Clamping action on tail edge side.

1. The upper male clutch activates to toward the plate cylinder for engaging with the female clutch.
2. The engaged clutch rotates to clockwise the clamp shaft for clamping.
3. The male clutch disengages to back the original position.

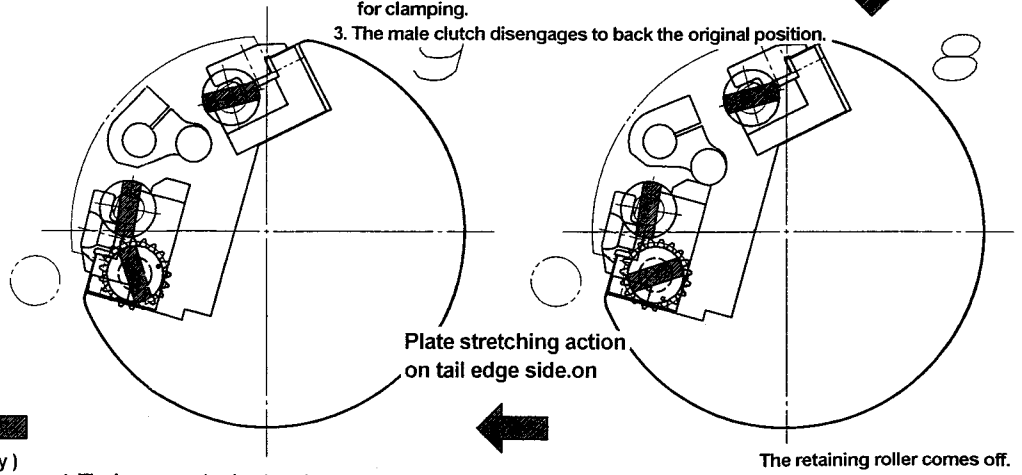

Plate stretching action on tail edge side.on

The retaining roller comes off.

1. The bottom male clutch activates toward to the plate cylinder for engaging with the female clutch which has a small gear.
2. The engaged clutch rotates to count-clockwise to turn the lever with gear for moving the tail clamp reverse.
3. The male clutch disengages to back the original position.

Close the safety cover.
(P-B impression comes off automatically)

Start the printing.

		図 歴	担 当	年 月 日
		00		

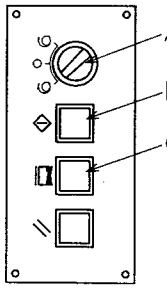

1

Open the safety cover on the plate cylinder side.
Set the selector switch "A" to "removing position".
(P-B impression comes on automatically)
Press the start switch "B".
The press runs at low speed and stops at the standard position on the tail edge side for plate removing.

Conformation of EPS clamp status:
[Clamp on the lead edge: closed]
[Clamp on the tail edge: closed]
[Clamp position on the tail edge side: stretched position]

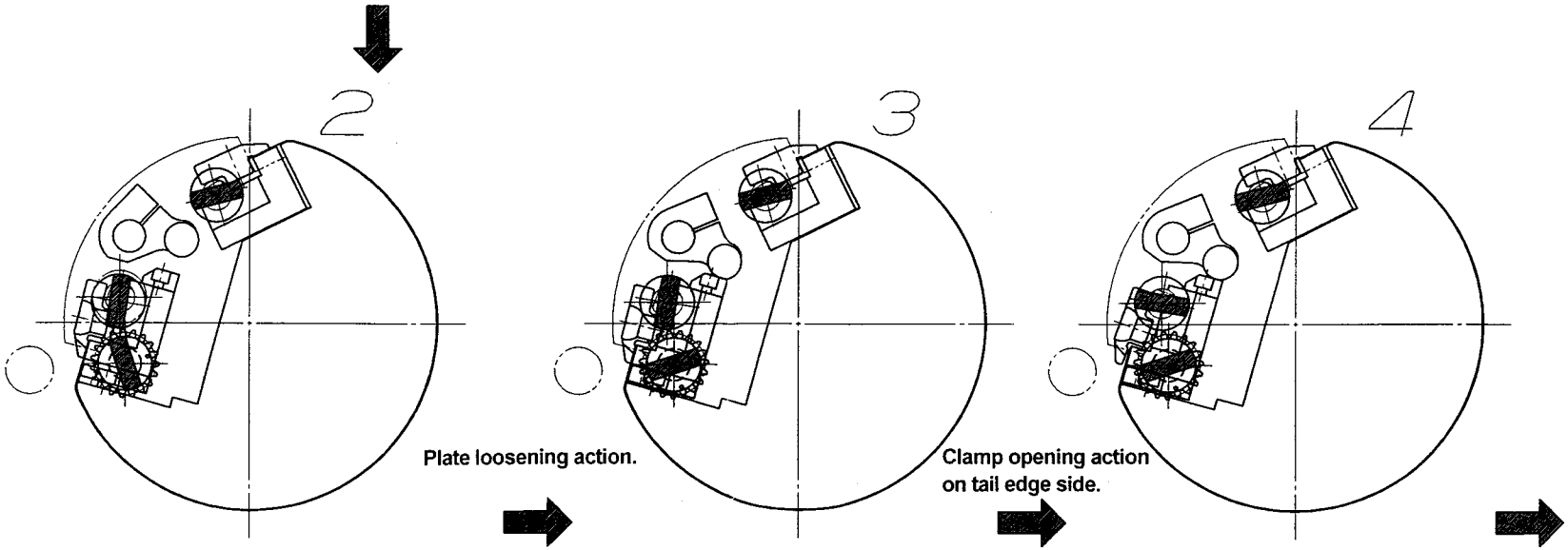

Plate loosening action.

1. The bottom male clutch activates toward to the plate cylinder for engaging with the female clutch which has a small gear.
2. The engaged clutch rotates to clockwise to turn the lever with gear for moving the tail clamp forward.
3. The male clutch disengages to back the original position.

Clamp opening action on tail edge side.

1. The upper male clutch activates toward to the plate cylinder for engaging with the female clutch.
2. The engaged clutch rotates to count- clockwise the clamp shaft for clamping.

		図番	担当	年 月 日
		00		

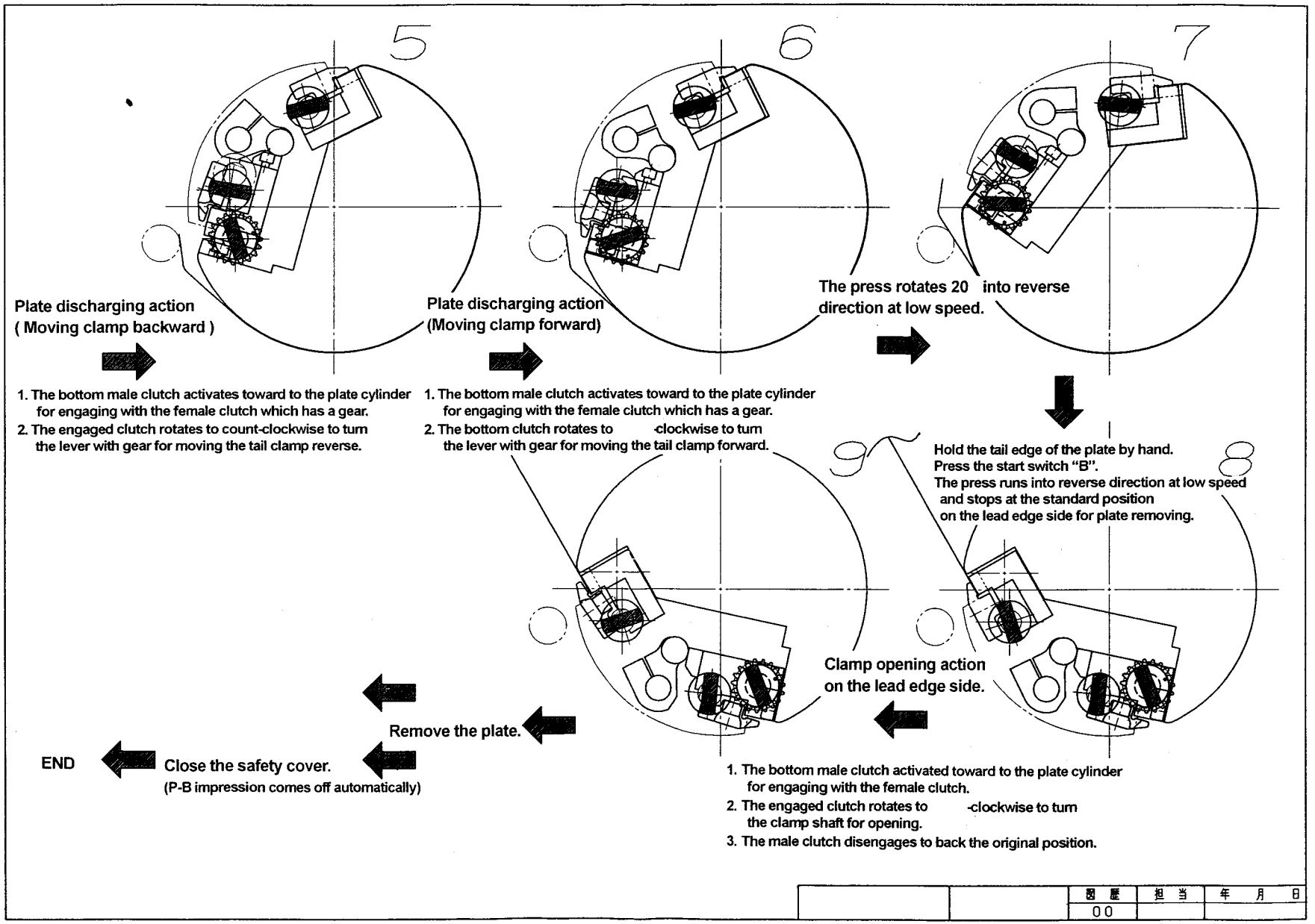
5
6
7
Plate discharging action
(Moving clamp backward)
1. The bottom male clutch activates toward to the plate cylinder for engaging with the female clutch which has a gear.
2. The engaged clutch rotates to count-clockwise to turn the lever with gear for moving the tail clamp reverse.
Plate discharging action
(Moving clamp forward)
1. The bottom male clutch activates toward to the plate cylinder for engaging with the female clutch which has a gear.
2. The bottom clutch rotates to -clockwise to turn the lever with gear for moving the tail clamp forward.
The press rotates 20 into reverse direction at low speed.
Hold the tail edge of the plate by hand.
Press the start switch "B".
The press runs into reverse direction at low speed and stops at the standard position on the lead edge side for plate removing.
9
8
Clamp opening action on the lead edge side.
1. The bottom male clutch activated toward to the plate cylinder for engaging with the female clutch.
2. The engaged clutch rotates to -clockwise to turn the clamp shaft for opening.
3. The male clutch disengages to back the original position.
Remove the plate.
END
Close the safety cover.
(P-B impression comes off automatically)

		図歴	担当	年 月 日
		00		

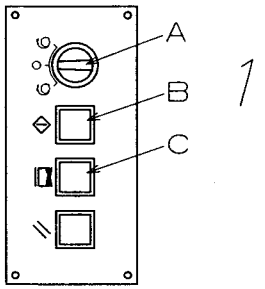

1

Open the safety cover on the plate cylinder side.
Set the selector switch "A" to " reset position".
Press the skew switch "C".
(P-B impression comes on automatically)
Press the start switch "B".
The press runs at low speed and stops at the standard position on the tail edge side for the plate loosening.

Conformation of EPS clamp status:
[Clamp on the lead edge: Closed]
[Clamp on the tail edge: Closed]
[Clamp position on the tail edge: stretched position]

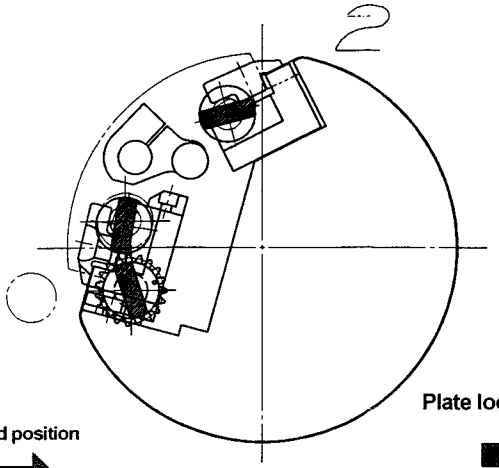

2

Plate loosening action.

1. The bottom male clutch activates toward to the plate cylinder for engaging with the female clutch which has a gear.
2. The engaged clutch rotates to clockwise to turn the lever with gear for moving the tail clamp forward.
3. The clutch disengages to back the original position.

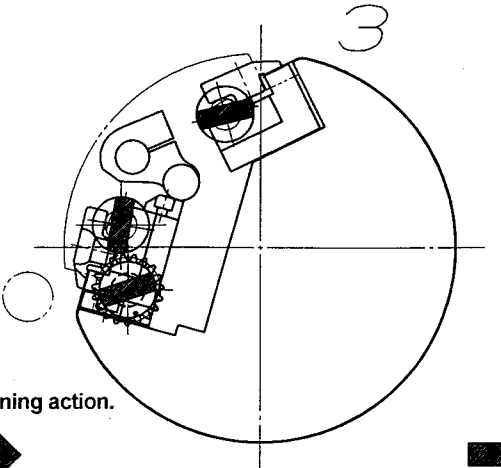

3

The press rotates 45 into the forward direction at low speed.

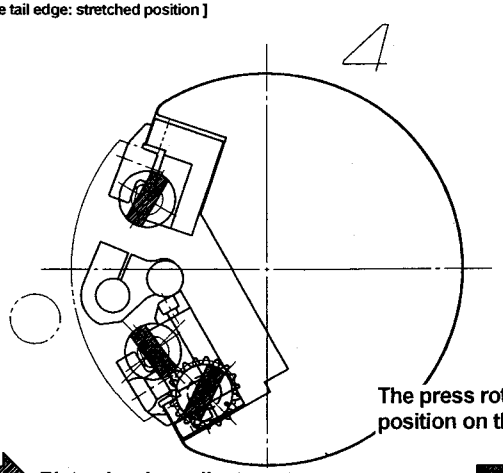

4

Plate skewing adjustment

(P-B impression comes off automatically)
Plate skewing adjustment on the lead edge side.
Plate skewing adjustment on the tail edge side.
Press the start switch "B".
(P-B impression comes on automatically)

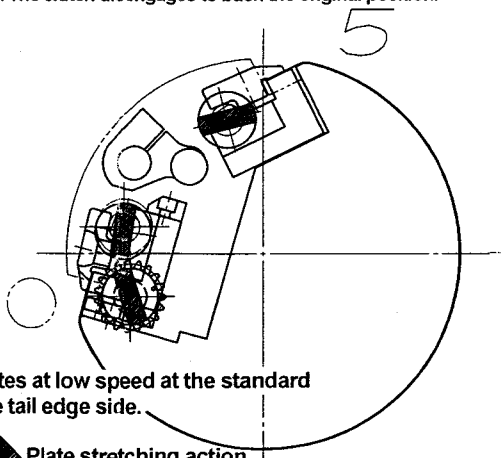

5

The press rotates at low speed at the standard position on the tail edge side.

Plate stretching action.

1. The bottom male clutch activates toward to the plate cylinder for engaging with the female clutch which has a gear.
2. The engaged clutch rotates to count-clockwise to turn the lever with gear for moving the tail clamp reverse.
3. The male clutch disengages to back the original position.

(P-B impression comes off automatically)

Close the safety cover. End.

	図番	担当	年 月 日
	00		

Data section
(drawings and conversion table)

Data Section

(Drawing and conversion table)

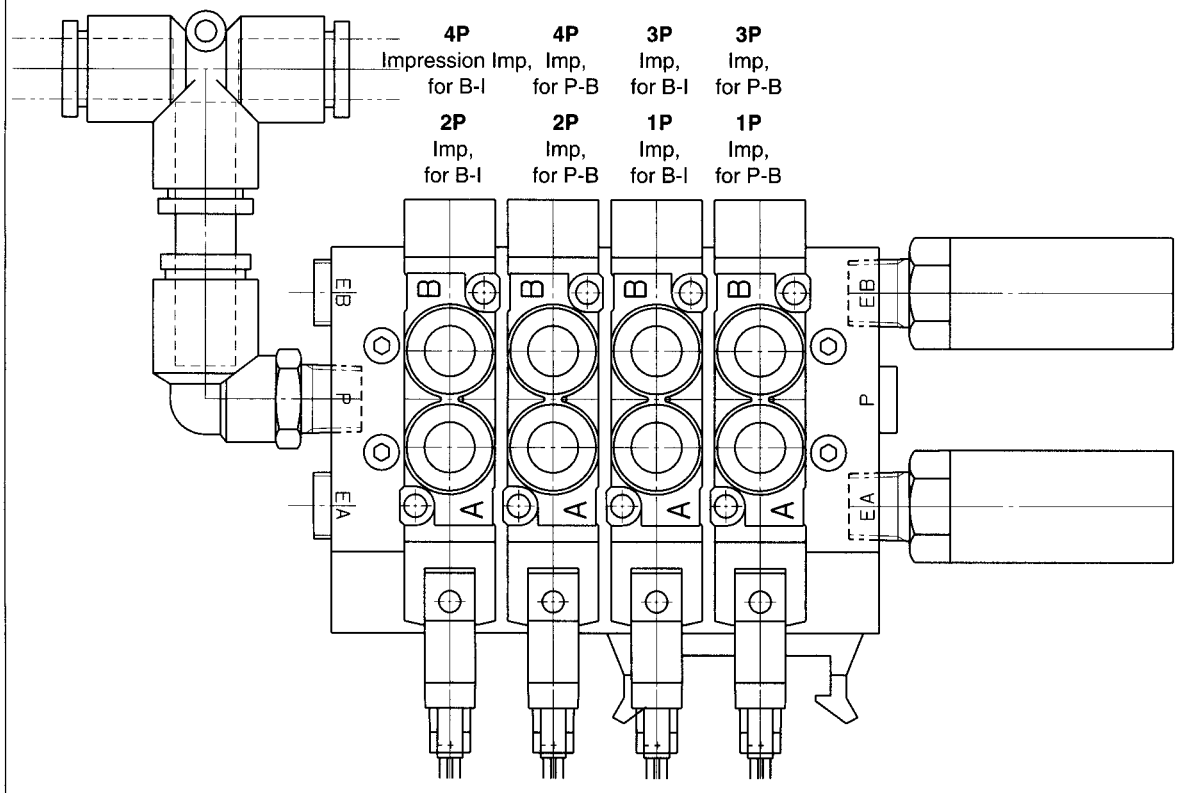
4P
Impression Imp,
for B-I
4P
Imp,
for P-B
3P
Imp,
for B-I
3P
Imp,
for P-B
2P
Imp,
for B-I
2P
Imp,
for P-B
1P
Imp,
for B-I
1P
Imp,
for P-B
B
A
P
EB
EA

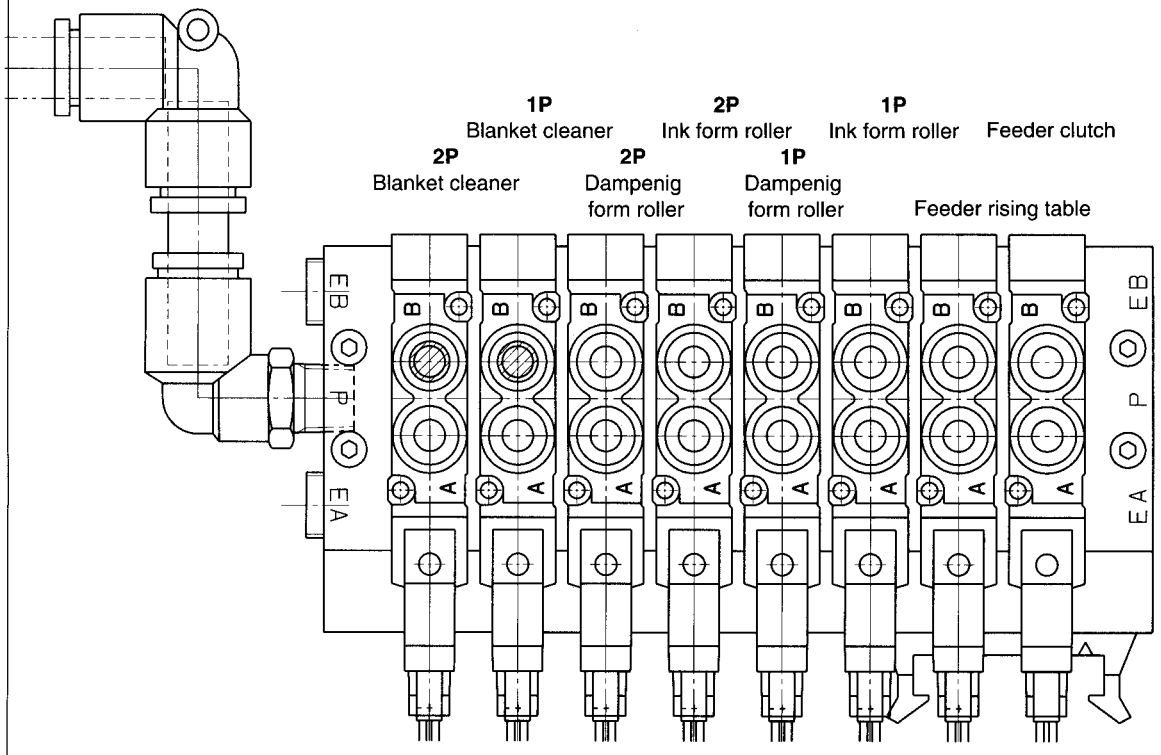
1P
Blanket cleaner
2P
Ink form roller
1P
Ink form roller
Feeder clutch
2P
Blanket cleaner
2P
Dampenig
form roller
1P
Dampenig
form roller
Feeder rising table
EB
P
EA
B
A

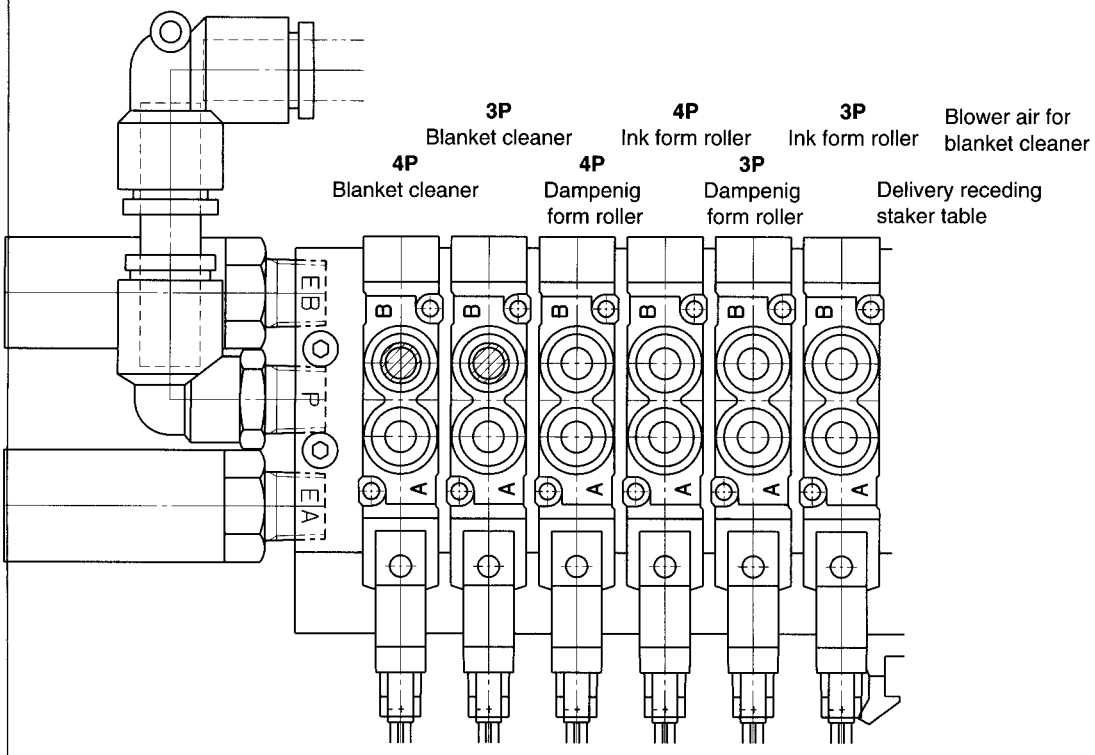
3P
Blanket cleaner
4P
Ink form roller
3P
Ink form roller
Blower air for blanket cleaner
4P
Blanket cleaner
4P
Dampenig form roller
3P
Dampenig form roller
Delivery receding staker table
EB
P
EA
B
A

Conversion Table

Thickness (length)			Tempture	
MM	INCH (Decimal)	INCH (Common fraction)	Centigrade C°	Fahrenheit F°
0.025		1/1000	0.0	32.0
0.05		2/1000	2.5	36.5
0.70		4/1000	5.0	41.0
0.15		6/1000	7.5	45.5
0.20		8/1000	10.0	50.0
0.30		12/1000	12.5	54.5
0.40		16/1000	15.0	59.0
0.50		20/1000	17.5	63.5
1.00		40/1000	20.0	68.0
1.65		65/1000	22.5	72.5
1.90		75/1000	25.0	77.0
2.65		105/1000	27.5	81.5
2.90		115/1000	30.0	56.0
			100.0	212.0
0.79	0.03	1/32		
1.00	0.04			
1.59	0.06	1/16		
2.00	0.08			
2.38	0.09	3/32		
3.00	0.11			
3.18	0.13	1/8		
3.97	0.16	5/32		
4.00	0.16			
4.76	0.19	3/16		
5.00	0.20			
5.56	0.22	7/32		
6.00	0.24			
6.35	0.25	1/4		
7.00	0.28			
7.14	0.28	9/32		
7.94	0.31	5/16		
8.00	0.32			
8.73	0.34	11/32		
9.00	0.35			
9.53	0.38	3/8		
10.00	0.39			
10.32	0.41	13/32		
11.00	0.43			
11.11	0.44	7/16		
11.91	0.47	15/32		
12.00	0.47			
12.70	0.50	1/2		
25.40	1.00			

The characteristic Factors of Multi Color Register Problems

Register problems have a close relation with the setting of the feeder section and the paper such as miscutting, poor handing and poor material.

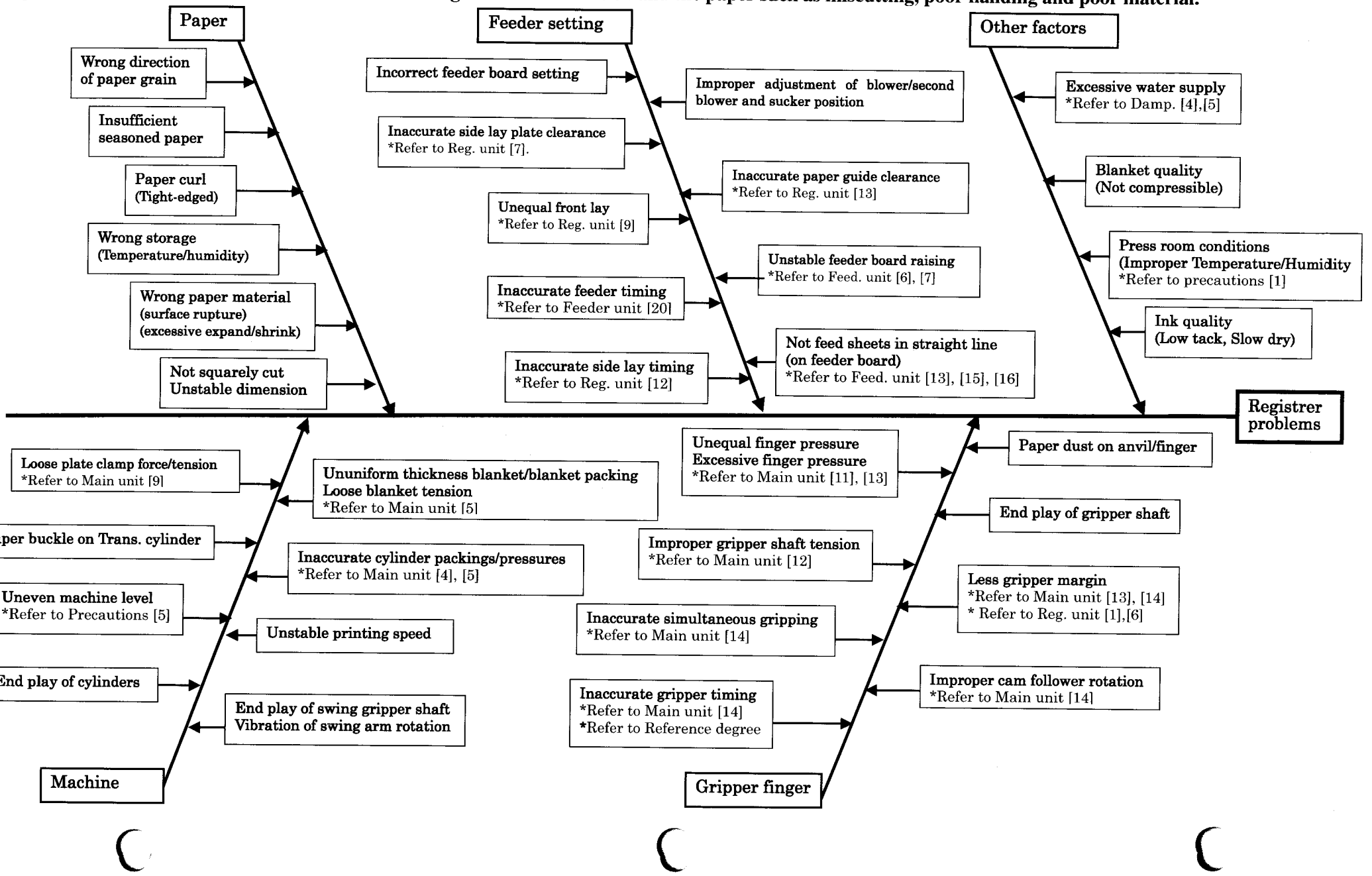

70	AUTO DAMPENING SPEED UP (4000)	*1
71	AUTO DAMPENING SPEED UP (5000)	*1
72	AUTO DAMPENING SPEED UP (6000)	*1
73	AUTO DAMPENING SPEED UP (7000)	*1
74	AUTO DAMPENING SPEED UP (8000)	*1
75	AUTO DAMPENING SPEED UP (9000)	*1
76	AUTO DAMPENING SPEED UP (10000)	*1
77	EPS 1P LEADING EDGE POSITION STOP	*2
78	EPS 1P TAIL EDGE POSITION STOP	*2
79	EPS 1P BACKWARD LEADING EDGE POSITION STOP	*2
80	EPS 2P LEADING EDGE POSITION STOP	*2
81	EPS 2P TAIL EDGE POSITION STOP	*2
82	EPS 2P BACKWARD LEADING EDGE POSITION STOP	*2
83	EPS 3P LEADING EDGE POSITION STOP	*2
84	EPS 3P TAIL EDGE POSITION STOP	*2
85	EPS 3P BACKWARD LEADING EDGE POSITION STOP	*2
86	EPS 4P LEADING EDGE POSITION STOP	*2
87	EPS 4P TAIL EDGE POSITION STOP	*2
88	EPS 4P BACKWARD LEADING EDGE POSITION	*2

Note:

*1 : AUTOMATIC ACCELERATION RATIO(70~76) OF F. ROLLER CAN BE SET AS OPTIONALLY ACCORDING TO PRINTING CONDITIONS.

*2 : DATE VALUE OF EPS PLATE CYLINDER POSITIONS(77~88) DIFFERS DEPEND ON THE MACHINE. (REFER TO THE MECHANICAL VERSION OF SERVICE MANUAL)

70	AUTO DAMPENING SPEED UP (4000)	*1
71	AUTO DAMPENING SPEED UP (5000)	*1
72	AUTO DAMPENING SPEED UP (6000)	*1
73	AUTO DAMPENING SPEED UP (7000)	*1
74	AUTO DAMPENING SPEED UP (8000)	*1
75	AUTO DAMPENING SPEED UP (9000)	*1
76	AUTO DAMPENING SPEED UP (10000)	*1
77	EPS 1P LEADING EDGE POSITION STOP	*2
78	EPS 1P TAIL EDGE POSITION STOP	*2
79	EPS 1P BACKWARD LEADING EDGE POSITION STOP	*2
80	EPS 2P LEADING EDGE POSITION STOP	*2
81	EPS 2P TAIL EDGE POSITION STOP	*2
82	EPS 2P BACKWARD LEADING EDGE POSITION STOP	*2
83	EPS 3P LEADING EDGE POSITION STOP	*2
84	EPS 3P TAIL EDGE POSITION STOP	*2
85	EPS 3P BACKWARD LEADING EDGE POSITION STOP	*2
86	EPS 4P LEADING EDGE POSITION STOP	*2
87	EPS 4P TAIL EDGE POSITION STOP	*2
88	EPS 4P BACKWARD LEADING EDGE POSITION	*2

Note:

*1 : AUTOMATIC ACCELERATION RATIO(70~76) OF F. ROLLER CAN BE SET AS OPTIONALLY ACCORDING TO PRINTING CONDITIONS.

*2 : DATE VALUE OF EPS PLATE CYLINDER POSITIONS(77~88) DIFFERS DEPEND ON THE MACHINE. (REFER TO THE MECHANICAL VERSION OF SERVICE MANUAL)

70	AUTO DAMPENING SPEED UP (4000)	*1
71	AUTO DAMPENING SPEED UP (5000)	*1
72	AUTO DAMPENING SPEED UP (6000)	*1
73	AUTO DAMPENING SPEED UP (7000)	*1
74	AUTO DAMPENING SPEED UP (8000)	*1
75	AUTO DAMPENING SPEED UP (9000)	*1
76	AUTO DAMPENING SPEED UP (10000)	*1
77	EPS 1P LEADING EDGE POSITION STOP	*2
78	EPS 1P TAIL EDGE POSITION STOP	*2
79	EPS 1P BACKWARD LEADING EDGE POSITION STOP	*2
80	EPS 2P LEADING EDGE POSITION STOP	*2
81	EPS 2P TAIL EDGE POSITION STOP	*2
82	EPS 2P BACKWARD LEADING EDGE POSITION STOP	*2
83	EPS 3P LEADING EDGE POSITION STOP	*2
84	EPS 3P TAIL EDGE POSITION STOP	*2
85	EPS 3P BACKWARD LEADING EDGE POSITION STOP	*2
86	EPS 4P LEADING EDGE POSITION STOP	*2
87	EPS 4P TAIL EDGE POSITION STOP	*2
88	EPS 4P BACKWARD LEADING EDGE POSITION	*2

Note:

*1 : AUTOMATIC ACCELERATION RATIO(70~76) OF F. ROLLER CAN BE SET AS OPTIONALLY ACCORDING TO PRINTING CONDITIONS.

*2 : DATE VALUE OF EPS PLATE CYLINDER POSITIONS(77~88) DIFFERS DEPEND ON THE MACHINE. (REFER TO THE MECHANICAL VERSION OF SERVICE MANUAL)

70	AUTO DAMPENING SPEED UP (4000)	*1
71	AUTO DAMPENING SPEED UP (5000)	*1
72	AUTO DAMPENING SPEED UP (6000)	*1
73	AUTO DAMPENING SPEED UP (7000)	*1
74	AUTO DAMPENING SPEED UP (8000)	*1
75	AUTO DAMPENING SPEED UP (9000)	*1
76	AUTO DAMPENING SPEED UP (10000)	*1
77	EPS 1P LEADING EDGE POSITION STOP	*2
78	EPS 1P TAIL EDGE POSITION STOP	*2
79	EPS 1P BACKWARD LEADING EDGE POSITION STOP	*2
80	EPS 2P LEADING EDGE POSITION STOP	*2
81	EPS 2P TAIL EDGE POSITION STOP	*2
82	EPS 2P BACKWARD LEADING EDGE POSITION STOP	*2
83	EPS 3P LEADING EDGE POSITION STOP	*2
84	EPS 3P TAIL EDGE POSITION STOP	*2
85	EPS 3P BACKWARD LEADING EDGE POSITION STOP	*2
86	EPS 4P LEADING EDGE POSITION STOP	*2
87	EPS 4P TAIL EDGE POSITION STOP	*2
88	EPS 4P BACKWARD LEADING EDGE POSITION	*2

Note:

*1 : AUTOMATIC ACCELERATION RATIO(70~76) OF F. ROLLER CAN BE SET AS OPTIONALLY ACCORDING TO PRINTING CONDITIONS.

*2 : DATE VALUE OF EPS PLATE CYLINDER POSITIONS(77~88) DIFFERS DEPEND ON THE MACHINE. (REFER TO THE MECHANICAL VERSION OF SERVICE MANUAL)

70	AUTO DAMPENING SPEED UP (4000)	*1
71	AUTO DAMPENING SPEED UP (5000)	*1
72	AUTO DAMPENING SPEED UP (6000)	*1
73	AUTO DAMPENING SPEED UP (7000)	*1
74	AUTO DAMPENING SPEED UP (8000)	*1
75	AUTO DAMPENING SPEED UP (9000)	*1
76	AUTO DAMPENING SPEED UP (10000)	*1
77	EPS 1P LEADING EDGE POSITION STOP	*2
78	EPS 1P TAIL EDGE POSITION STOP	*2
79	EPS 1P BACKWARD LEADING EDGE POSITION STOP	*2
80	EPS 2P LEADING EDGE POSITION STOP	*2
81	EPS 2P TAIL EDGE POSITION STOP	*2
82	EPS 2P BACKWARD LEADING EDGE POSITION STOP	*2
83	EPS 3P LEADING EDGE POSITION STOP	*2
84	EPS 3P TAIL EDGE POSITION STOP	*2
85	EPS 3P BACKWARD LEADING EDGE POSITION STOP	*2
86	EPS 4P LEADING EDGE POSITION STOP	*2
87	EPS 4P TAIL EDGE POSITION STOP	*2
88	EPS 4P BACKWARD LEADING EDGE POSITION	*2

Note:

*1 : AUTOMATIC ACCELERATION RATIO(70~76) OF F. ROLLER CAN BE SET AS OPTIONALLY ACCORDING TO PRINTING CONDITIONS.

*2 : DATE VALUE OF EPS PLATE CYLINDER POSITIONS(77~88) DIFFERS DEPEND ON THE MACHINE. (REFER TO THE MECHANICAL VERSION OF SERVICE MANUAL)

70	AUTO DAMPENING SPEED UP (4000)	*1
71	AUTO DAMPENING SPEED UP (5000)	*1
72	AUTO DAMPENING SPEED UP (6000)	*1
73	AUTO DAMPENING SPEED UP (7000)	*1
74	AUTO DAMPENING SPEED UP (8000)	*1
75	AUTO DAMPENING SPEED UP (9000)	*1
76	AUTO DAMPENING SPEED UP (10000)	*1
77	EPS 1P LEADING EDGE POSITION STOP	*2
78	EPS 1P TAIL EDGE POSITION STOP	*2
79	EPS 1P BACKWARD LEADING EDGE POSITION STOP	*2
80	EPS 2P LEADING EDGE POSITION STOP	*2
81	EPS 2P TAIL EDGE POSITION STOP	*2
82	EPS 2P BACKWARD LEADING EDGE POSITION STOP	*2
83	EPS 3P LEADING EDGE POSITION STOP	*2
84	EPS 3P TAIL EDGE POSITION STOP	*2
85	EPS 3P BACKWARD LEADING EDGE POSITION STOP	*2
86	EPS 4P LEADING EDGE POSITION STOP	*2
87	EPS 4P TAIL EDGE POSITION STOP	*2
88	EPS 4P BACKWARD LEADING EDGE POSITION	*2

Note:

*1 : AUTOMATIC ACCELERATION RATIO(70~76) OF F. ROLLER CAN BE SET AS OPTIONALLY ACCORDING TO PRINTING CONDITIONS.

*2 : DATE VALUE OF EPS PLATE CYLINDER POSITIONS(77~88) DIFFERS DEPEND ON THE MACHINE. (REFER TO THE MECHANICAL VERSION OF SERVICE MANUAL)